AFU 'A'AU WATERFALL

PROPOSED TOILET BLOCK & GATE

GEF CLIMATE RESILIENCE PROJECT
VAILOA, PALAULI, SAVAI'I, SAMOA

Sheet List	
Sheet Number	Sheet Name
A000	COVER SHEET
A002	GATE LAYOUT & DETAILS
A003	PLATFORM & RETAINING WALL
A100	FOUNDATION - TOILET BLOCK
A102	FLOOR - TOILET BLOCK
A103	ROOF PLANS - TOILET BLOCK
A200	ELEVATIONS - TOILET BLOCK
A300	SECTIONS - TOILET BLOCK
A401	CONSTRUCTION DETAILS - TOILET BLOCK
A501	DOOR & WINDOW SCHEDULE - TOILET BLOCK
A502	BATHROOM DETAILS - TOILET BLOCK
A503	INTERNAL ELEVATIONS - TOILET BLOCK
H101	HYDRAULIC DESIGN - TOILET BLOCK
H102	SEPTIC TANK PLANS
H103	SEPTIC TANK SECTIONS & DETAILS

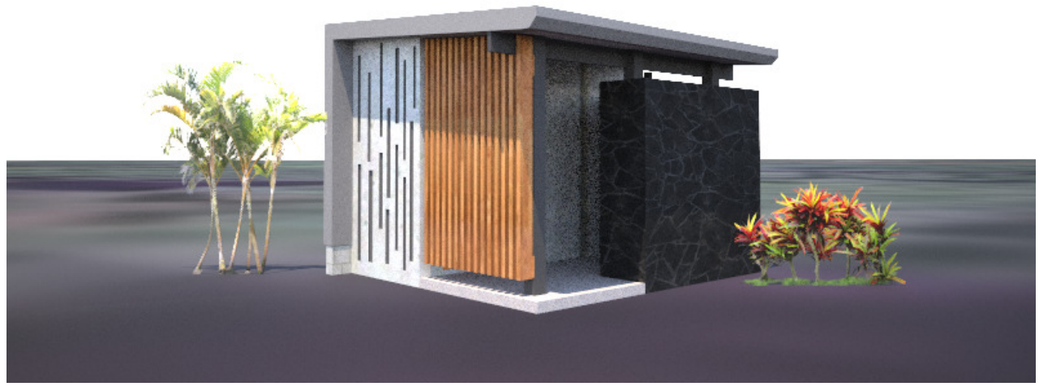

FOR TENDER

REVISIONS	REV	DATE	DESCRIPTION	DWN	ENG	CHK
						KHL
		1/2/2017				
		1/2/2017		AG	LW	CSch

CLIENT
SAMOA TOURISM AUTHORITY

Kramer Ausenco
PROFESSIONAL PROJECT MANAGERS
ENGINEERS - SURVEYORS - ARCHITECTS
First Floor, Maxkar House Cnr Convent Street and Saleufi Rd, Saleufi P.O. Box 593, Apia, SAMOA
Phone: (685) 30353 Fax: (685) 30355
Email: apia@kramerausenco.com
Web: www.kramerausenco.com

QUALITY	
DRAWN: AG	DATE: 1/2/2017
DRAWING CHECKED: CSch	DATE: 1/2/2017
ENGINEER: LW	DATE: 1/2/2017
DESIGN CHECKED: KHL	DATE: 1/2/2017
DIRECTOR/MANAGER	DATE:

GEF TOURISM CLIMATE RESILIENCE PROJECT

PROJECT DESCRIPTION
PROPOSED TOILET BLOCK & GATE, VAILOA PALAULI, SAVAI'I

DRAWING TITLE
COVER SHEET

PROJECT No.
16290W

SCALE:
AS NOTED
FULL SIZE A1

DRAWING No.
A000

REVISION

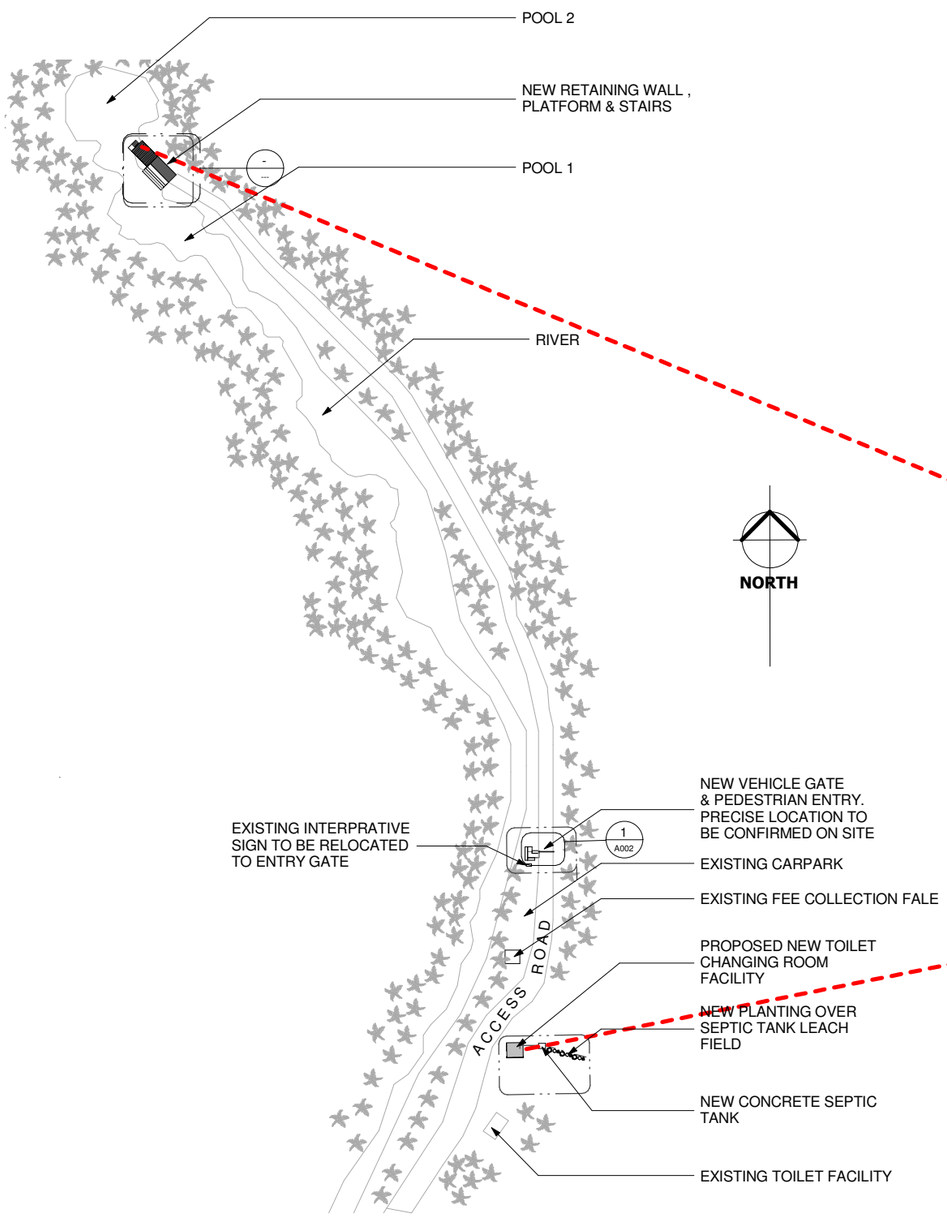

1 SITE PLAN
1 : 700

VAILOA

2 LOCALITY
1 : 500

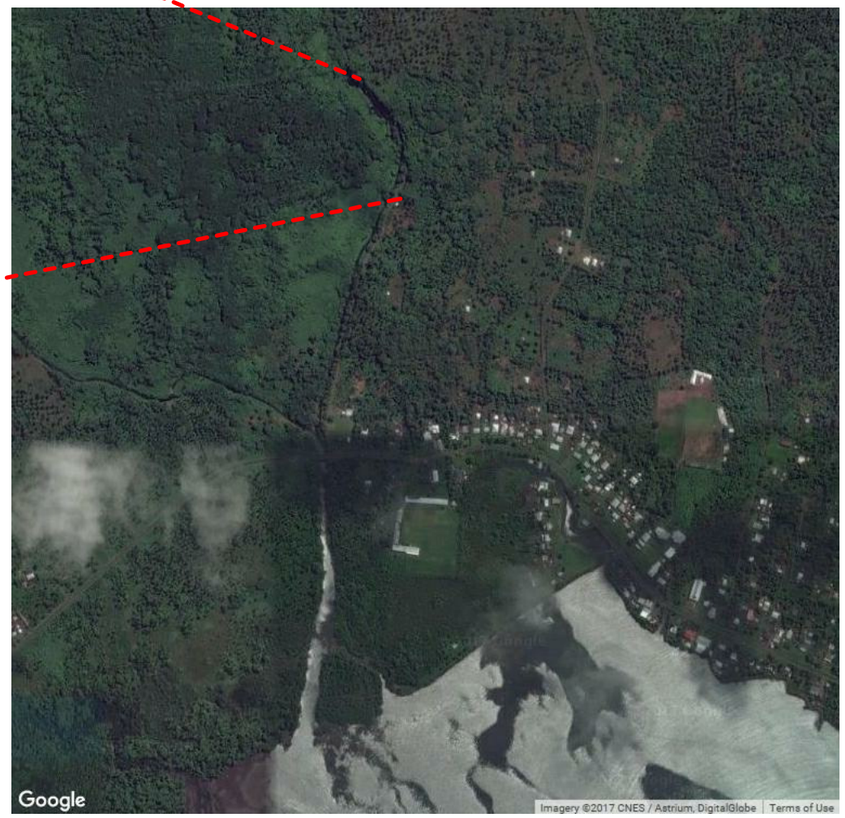

FOR TENDER

REVISIONS	REV	DATE	DESCRIPTION	DWN	ENG	CHK
				AG		

CLIENT
SAMOA TOURISM AUTHORITY

Kramer Ausenco
PROFESSIONAL PROJECT MANAGERS
ENGINEERS - SURVEYORS - ARCHITECTS
First Floor, Maxkar House Cnr Convent Street and Saleufi Rd, Saleufi P.O. Box 593, Apia, SAMOA
Phone: (685) 30353 Fax: (685) 30355
Email: apia@kramerausenco.com
Web: www.kramerausenco.com

QUALITY

DRAWN:	DATE:
DRAWING CHECKED:	DATE:
ENGINEER:	DATE:
DESIGN CHECKED:	DATE:
DIRECTOR/MANAGER	DATE:

GEF TOURISM CLIMATE RESILIENCE PROJECT

PROJECT DESCRIPTION
PROPOSED TOILET BLOCK & GATE, VAILOA PALAULI, SAVAI'I

DRAWING TITLE
PROPOSED SITE

PROJECT No. **16290W**

SCALE: AS NOTED FULL SIZE A1

DRAWING No. **A001**

REVISION

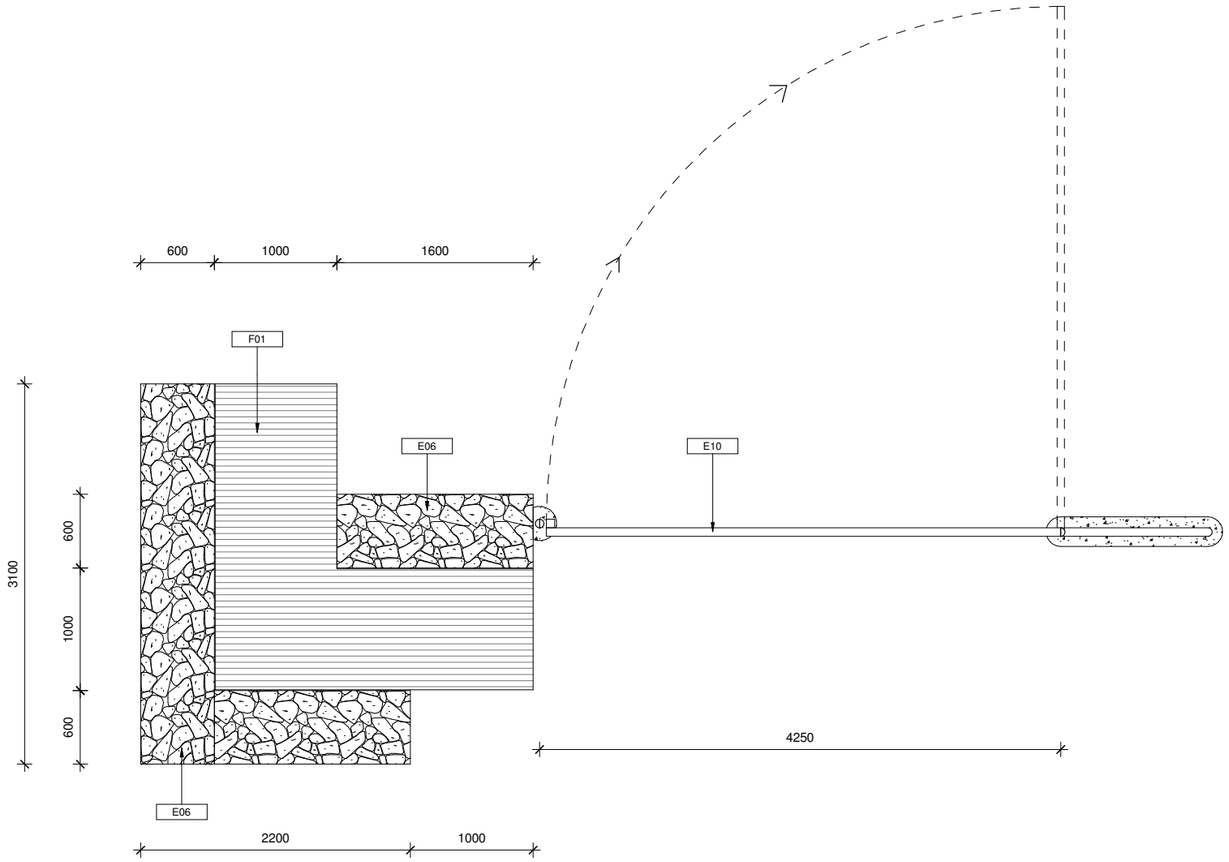

1 PROPOSED GATE PLAN
1 : 25

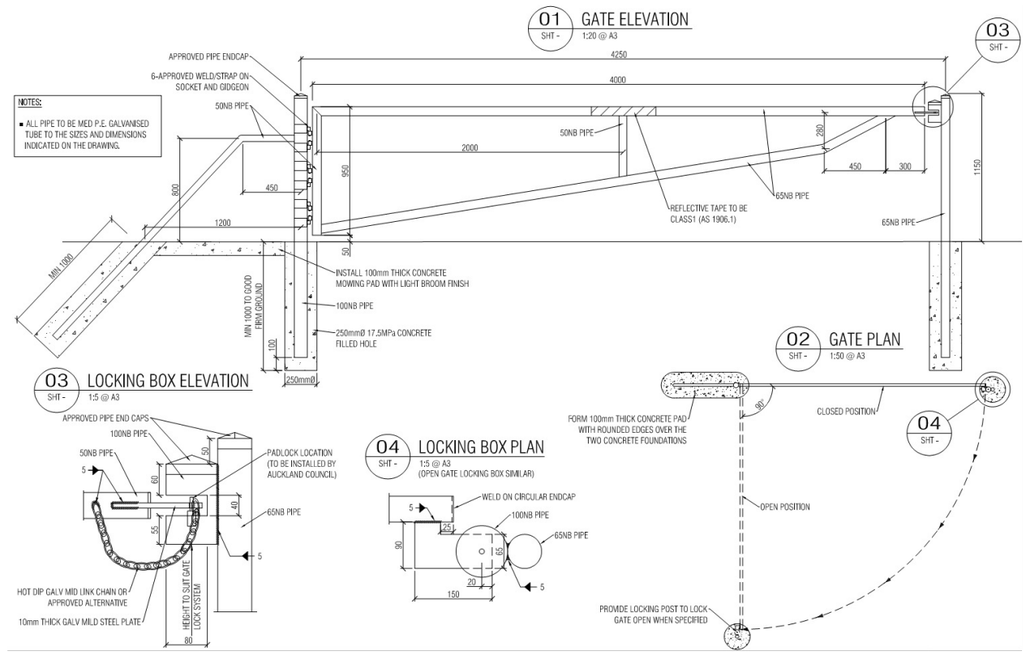

2 GATE DETAILS
1 : 20

FOR TENDER

REVISIONS	REV	DATE	DESCRIPTION	DWN	ENG	CHK

CLIENT
SAMOA TOURISM AUTHORITY

Kramer Ausenco
PROFESSIONAL PROJECT MANAGERS
ENGINEERS - SURVEYORS - ARCHITECTS
First Floor, Maxkar House Cnr Convent Street and Saleufi Rd, Saleufi P.O. Box 593, Apia, SAMOA
Phone: (685) 30353 Fax: (685) 30355
Email: apia@kramerausenco.com
Web: www.kramerausenco.com

QUALITY	
DRAWN:	DATE:
DRAWING CHECKED:	DATE:
ENGINEER:	DATE:
DESIGN CHECKED:	DATE:
DIRECTOR/MANAGER	DATE:

GEF TOURISM CLIMATE RESILIENCE PROJECT

PROJECT DESCRIPTION
PROPOSED TOILET BLOCK & GATE, VAILOA PALAULI, SAVAI'I

DRAWING TITLE
GATE LAYOUT & DETAILS

PROJECT No. **16290W**

SCALE: AS NOTED FULL SIZE A1

DRAWING No. **A002**

REVISION

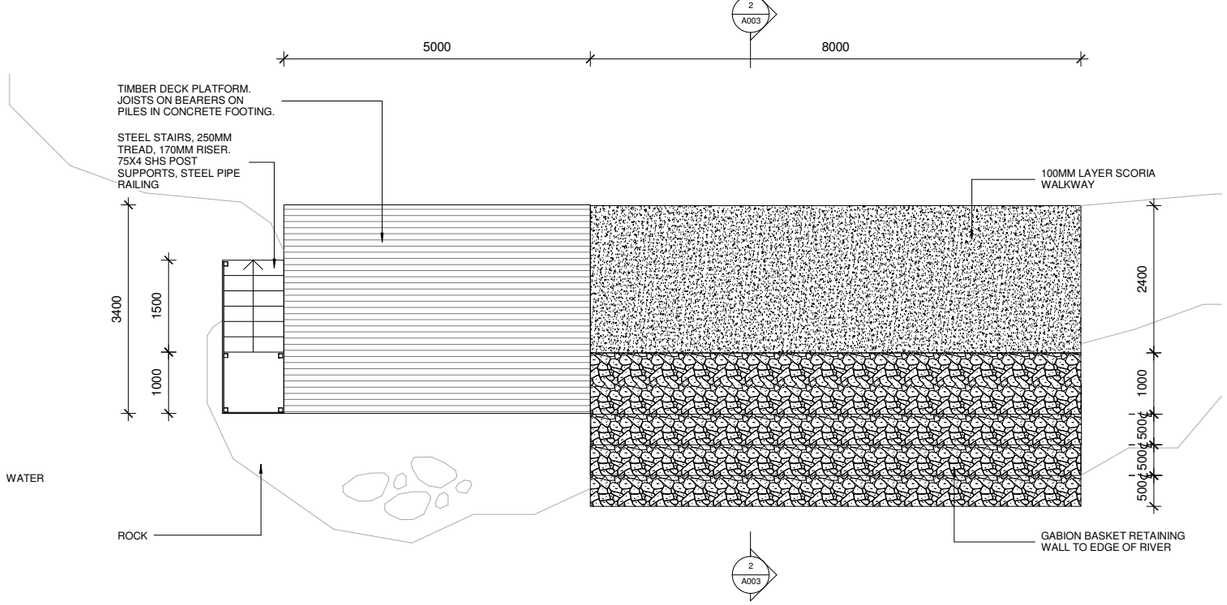

1 PLATFORM & RETAINING WALL PLAN
1 : 50

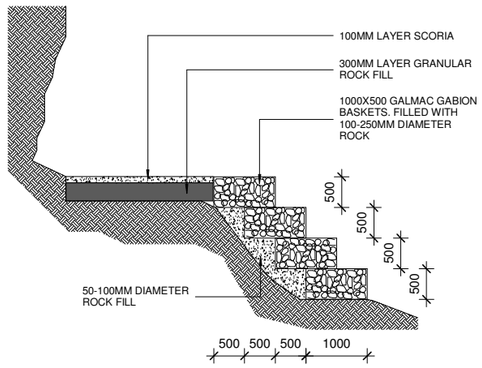

2 RETAINING WALL SECTION
1 : 50

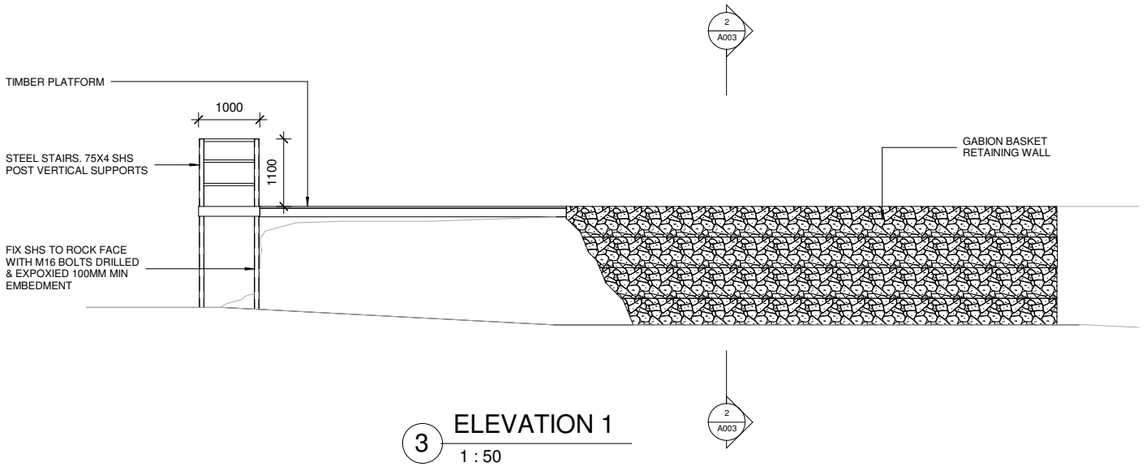

3 ELEVATION 1
1 : 50

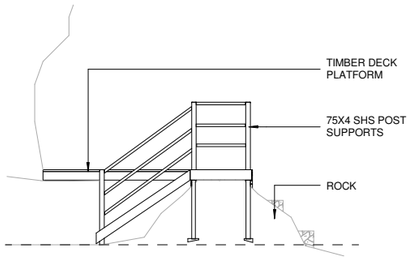

4 ELEVATION 2
1 : 50

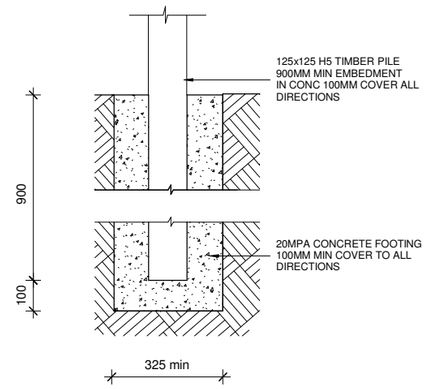

5 PILE DETAIL
1 : 10

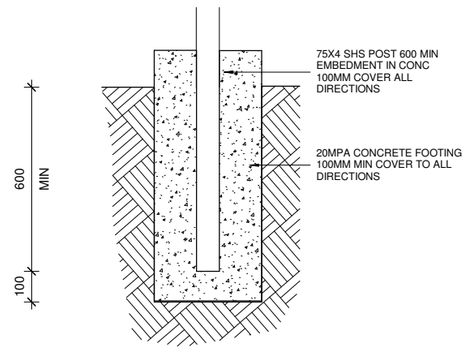

6 SHS POST DETAIL
1 : 10

FOR TENDER

REVISIONS	REV	DATE	DESCRIPTION	DWN	ENG	CHK

CLIENT
SAMOA TOURISM AUTHORITY

Kramer Ausenco
PROFESSIONAL PROJECT MANAGERS
ENGINEERS - SURVEYORS - ARCHITECTS
First Floor, Maxkar House Cnr Convent Street and Saleufi Rd, Saleufi P.O. Box 593, Apia, SAMOA
Phone: (685) 30353 Fax: (685) 30355
Email: apia@kramerausenco.com
Web: www.kramerausenco.com

QUALITY

DRAWN:	DATE:
DRAWING CHECKED:	DATE:
ENGINEER:	DATE:
DESIGN CHECKED:	DATE:
DIRECTOR/MANAGER	DATE:

GEF TOURISM CLIMATE RESILIENCE PROJECT

PROJECT DESCRIPTION
PROPOSED TOILET BLOCK & GATE, VAILOA PALAULI, SAVAI'I

DRAWING TITLE
PLATFORM & RETAINING WALL

PROJECT No. **16290W**

SCALE: AS NOTED FULL SIZE A1

DRAWING No. **A003**

REVISION

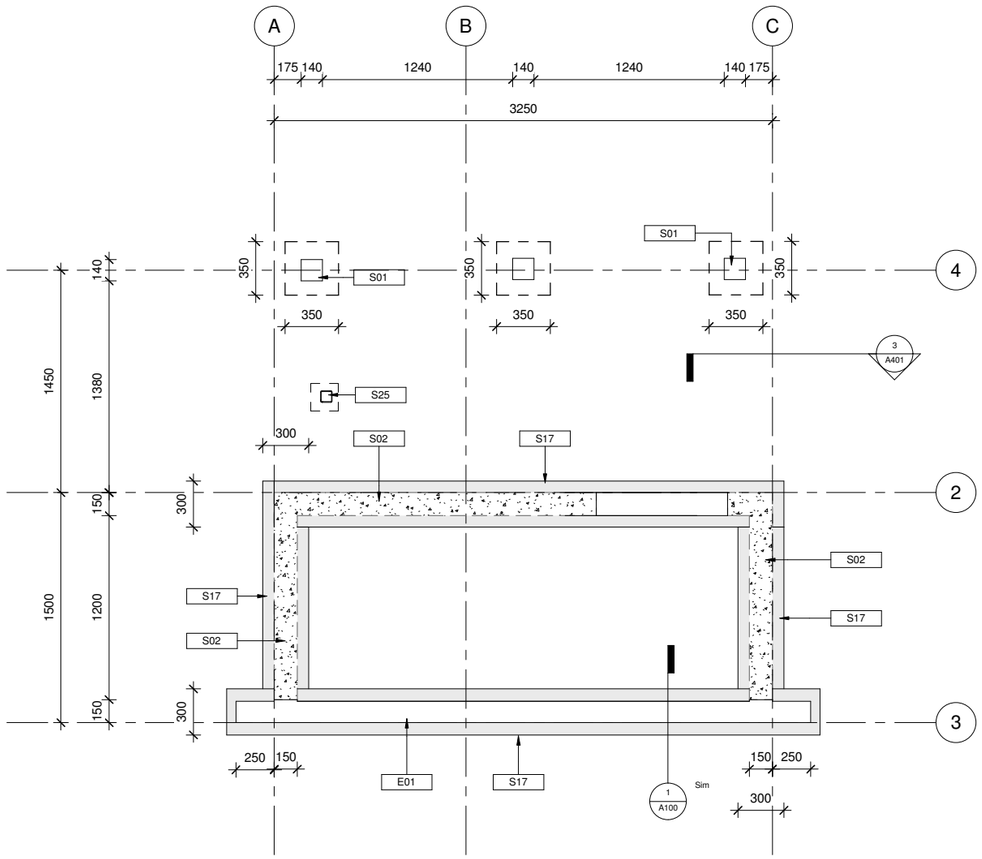

2 FOUNDATION PLAN
1 : 20

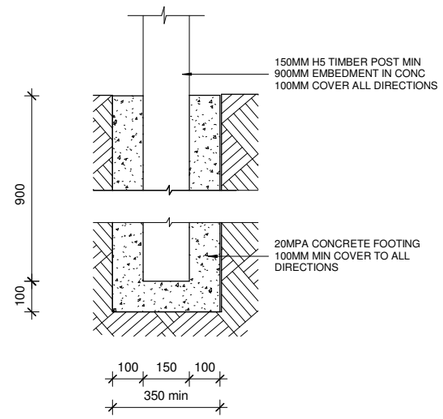

3 TYPICAL POST FOOTING
1 : 10

NOTES	
Key Value	**Keynote Text**
E01	15 SERIES MASONRY BLOCK FOUNDATION WALL D12 @ 400 CRS VERTICAL, D12 @ 600 CRS HORIZONTAL. PAINTED.
S01	150MM DIAMETER MIN TIMBER POSTS (POUMULI OR H5 TREATED) 900MM MIN EMBEDMENT IN CONCRETE, 100MM COVER ALL DIRECTIONS. POLYURETHANE FINISH. NO CARVINGS PERMITTED.
S02	150MM THICK REINFORCED INSITU CONCRETE WALL. D12 @ 200CRS BOTH DIRECTIONS. 'MUSHROOM' COLOURED OXIDE TO CONCRETE MIX. SEAL WITH PETER FELL CLEAR SEALER.
S17	400X300 CONCRETE FOOTING. 2-D16 TOP AND BOTTOM. R6 STIRRUPS @ 300 CRS. 75MM MIN COVER TO REBAR.
S25	75X4 GALVANISED SHS POST IN 600X275 20MPA CONCRETE FOOTING.

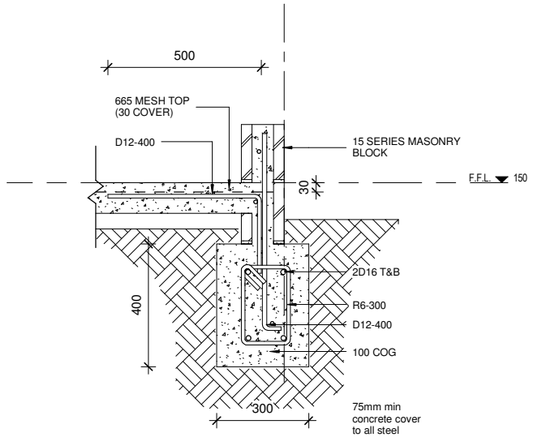

1 MASONRY WALL FOOTING
1 : 10

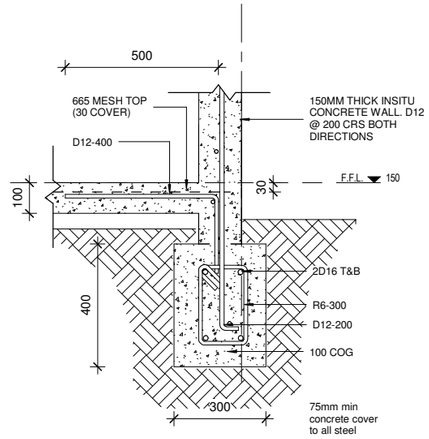

4 CONCRETE WALL FOOTING
1 : 10

FOR TENDER

REVISIONS	REV	DATE	DESCRIPTION	DWN	ENG	CHK

CLIENT
SAMOA TOURISM AUTHORITY

Kramer Ausenco
PROFESSIONAL PROJECT MANAGERS
ENGINEERS - SURVEYORS - ARCHITECTS
First Floor, Maxkar House Cnr Convent Street and Saleufi Rd, Saleufi P.O. Box 593, Apia, SAMOA
Phone: (685) 30353 Fax: (685) 30355
Email: apia@kramerausenco.com
Web: www.kramerausenco.com

QUALITY

DRAWN:	DATE:
DRAWING CHECKED:	DATE:
ENGINEER:	DATE:
DESIGN CHECKED:	DATE:
DIRECTOR/MANAGER	DATE:

GEF TOURISM CLIMATE RESILIENCE PROJECT

PROJECT DESCRIPTION
PROPOSED TOILET BLOCK & GATE, VAILOA PALAULI, SAVAI'I

DRAWING TITLE
FOUNDATION - TOILET BLOCK

PROJECT No. **16290W**

SCALE: AS NOTED FULL SIZE A1

DRAWING No. **A100**

REVISION

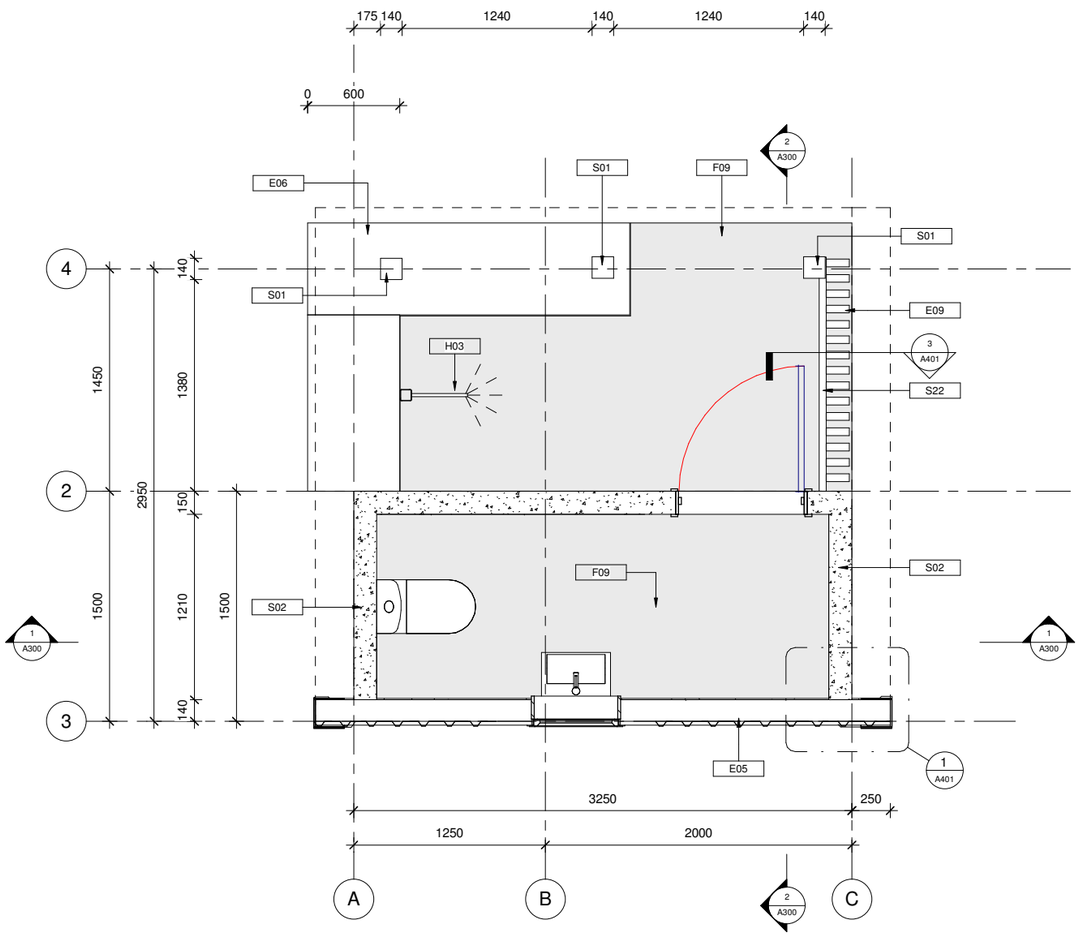

1 FLOOR PLAN
1 : 20

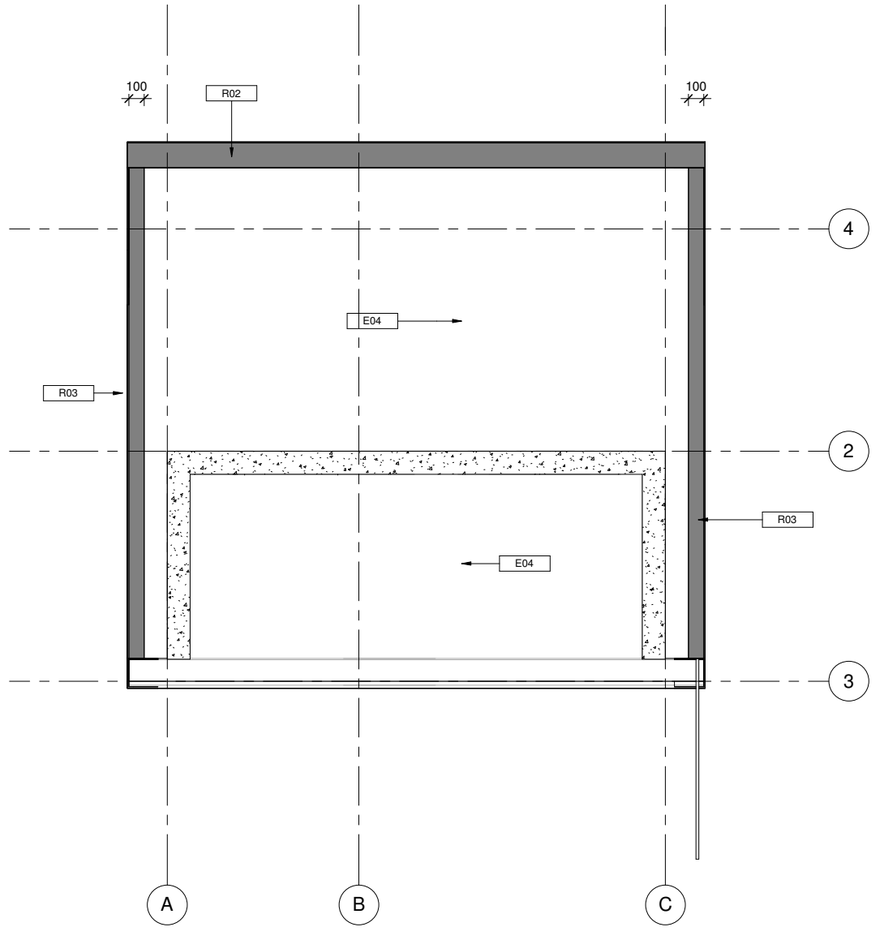

2 REFLECTED CEILING PLAN
1 : 20

NOTES	
Key Value	**Keynote Text**
E04	9MM FIBRE CEMENT CEILING/ SOFFIT LINING. SCREW FIXED TO TIMBER FRAMING. PAINT FINISH. BEVEL EDGES.
E05	COLORBOND TRIMDECK PROFILE CLADDING ON BUILDING WRAP ON 140X45 H3.2 TIMBER STUDS @ 600MM MAX CRS, NOGS @ 800CRS.SURFMIST COLOUR.
E06	600MM THICK GABION BASKET ROCK WALL.
E09	150X50H3.2 TIMBER SLATTED SHADES. CABBOTS KWILA STAIN FINISH.
F09	100MM THICK CONCRETE FLOOR SLAB. SMOOTH TROWEL FINISH. APPLY PETER FELL BLACK OXIDE TO CONCRETE MIX AND CLEAR SEAL WITH PETER FELL SATIN CONCRETE SEALER.
H03	GALVANISED STEEL PIPE SHOWER. BLUE GATE VALVE.
R02	CUSTOM COLORBOND GUTTER.

NOTES	
Key Value	**Keynote Text**
R03	COLORBOND BARGE FLASHING, TO MATCH ROOF SHEETING.
S01	150MM DIAMETER MIN TIMBER POSTS (POUMULI OR H5 TREATED) 900MM MIN EMBEDMENT IN CONCRETE, 100MM COVER ALL DIRECTIONS. POLYURETHANE FINISH. NO CARVINGS PERMITTED.
S02	150MM THICK REINFORCED INSITU CONCRETE WALL. D12 @ 200CRS BOTH DIRECTIONS. 'MUSHROOM' COLOURED OXIDE TO CONCRETE MIX. SEAL WITH PETER FELL CLEAR SEALER.
S22	190X45 H3.2 TIMBER BEAM. FIX WITH 2/STAINLESS STEEL M12 BOLTS TO POSTS.

FOR TENDER

REVISIONS	REV	DATE	DESCRIPTION	DWN	ENG	CHK

CLIENT
SAMOA TOURISM AUTHORITY

Kramer Ausenco
PROFESSIONAL PROJECT MANAGERS
ENGINEERS - SURVEYORS - ARCHITECTS
First Floor, Maxkar House Cnr Convent Street and Saleufi Rd, Saleufi P.O. Box 593, Apia, SAMOA
Phone: (685) 30353 Fax: (685) 30355
Email: apia@kramerausenco.com
Web: www.kramerausenco.com

QUALITY

DRAWN:	DATE:
DRAWING CHECKED:	DATE:
ENGINEER:	DATE:
DESIGN CHECKED:	DATE:
DIRECTOR/MANAGER	DATE:

GEF TOURISM CLIMATE RESILIENCE PROJECT

PROJECT DESCRIPTION
PROPOSED TOILET BLOCK & GATE, VAILOA PALAULI, SAVAI'I

DRAWING TITLE
FLOOR - TOILET BLOCK

PROJECT No. **16290W**

SCALE: AS NOTED FULL SIZE A1

DRAWING No. **A102**

REVISION

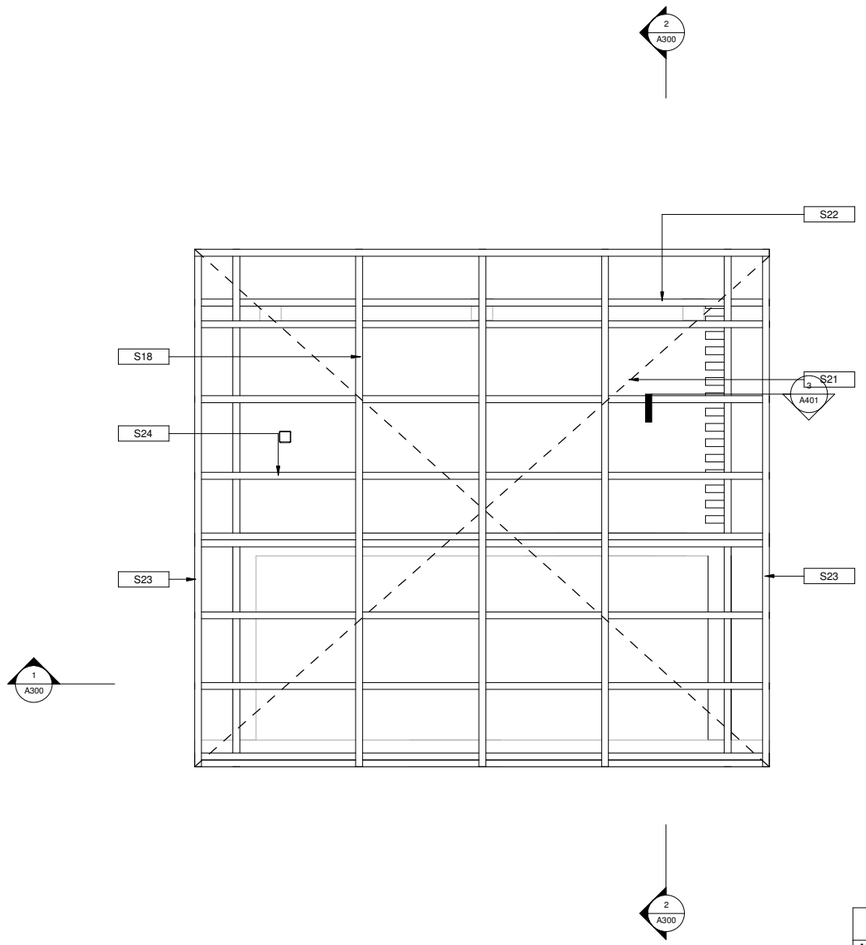

2 ROOF FRAMING PLAN
1 : 20

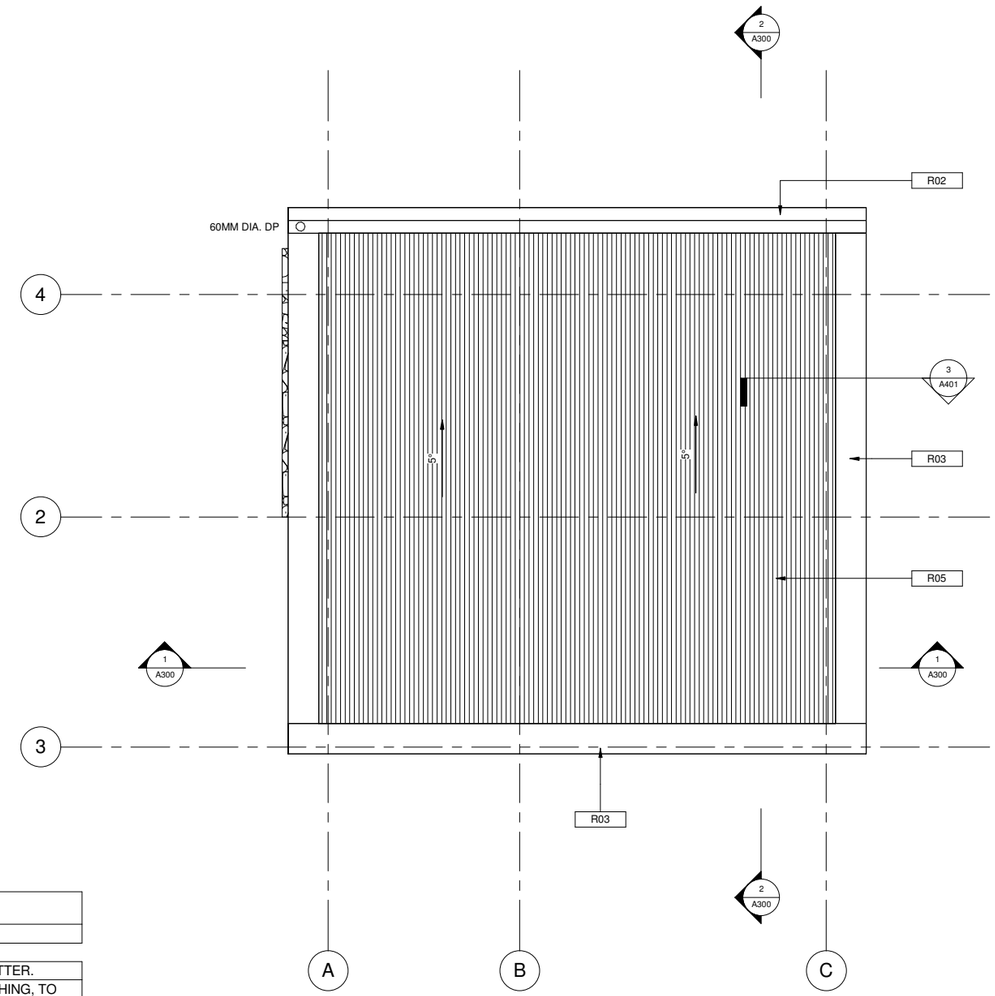

1 ROOF PLAN
1 : 20

NOTES	
Key Value	**Keynote Text**
R02	CUSTOM COLORBOND GUTTER.
R03	COLORBOND BARGE FLASHING, TO MATCH ROOF SHEETING.
R05	COLORBOND TRIMDEK ROOFING.
S18	140X45 H3.2 TIMBER RAFTERS @ 600MM CRS, FULL DEPTH SOLID BLOCKING @ 450MM MAX CRS. FIX BLOCKING WITH JOIST HANGERS IN BETWEEN RAFTERS.
S21	STRAP BRACING.
S22	190X45 H3.2 TIMBER BEAM. FIX WITH 2/STAINLESS STEEL M12 BOLTS TO POSTS.
S23	140X45 H3.2 EDGE RAFTER.
S24	140X45 H3.2 TIMBER OUTRIGGER.

FOR TENDER

REVISIONS	REV	DATE	DESCRIPTION	DWN	ENG	CHK

CLIENT
SAMOA TOURISM AUTHORITY

Kramer Ausenco
PROFESSIONAL PROJECT MANAGERS
ENGINEERS - SURVEYORS - ARCHITECTS
First Floor, Maxkar House Cnr Convent Street and Saleufi Rd, Saleufi P.O. Box 593, Apia, SAMOA
Phone: (685) 30353 Fax: (685) 30355
Email: apia@kramerausenco.com
Web: www.kramerausenco.com

QUALITY

DRAWN:	DATE:
DRAWING CHECKED:	DATE:
ENGINEER:	DATE:
DESIGN CHECKED:	DATE:
DIRECTOR/MANAGER	DATE:

GEF TOURISM CLIMATE RESILIENCE PROJECT

PROJECT DESCRIPTION
PROPOSED TOILET BLOCK & GATE, VAILOA PALAULI, SAVAI'I

DRAWING TITLE
ROOF PLANS - TOILET BLOCK

PROJECT No. **16290W**

SCALE: AS NOTED FULL SIZE A1

DRAWING No. **A103**

REVISION

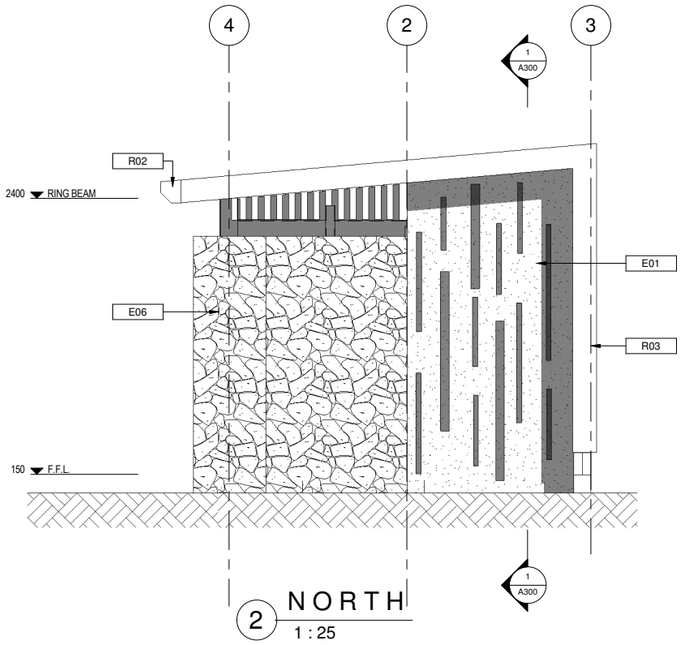

2 NORTH
1 : 25

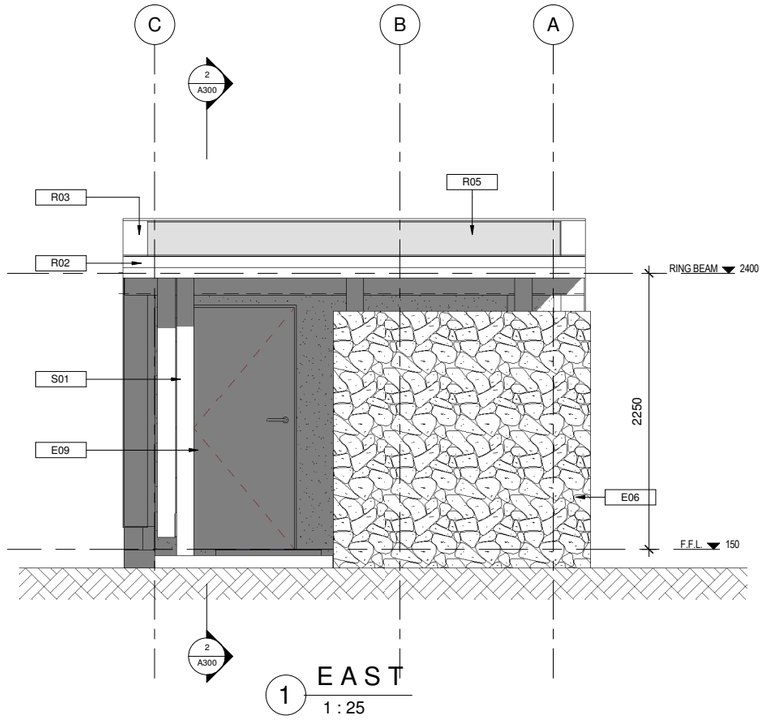

1 EAST
1 : 25

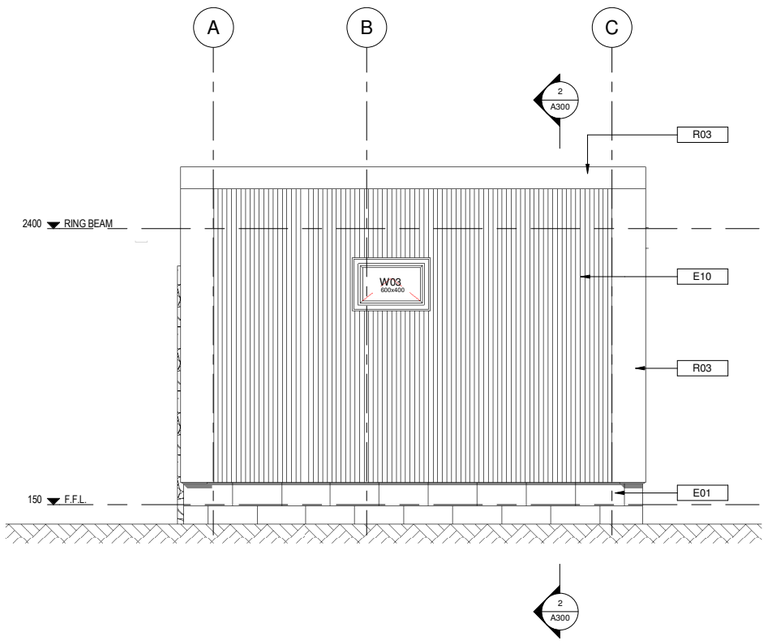

3 WEST
1 : 25

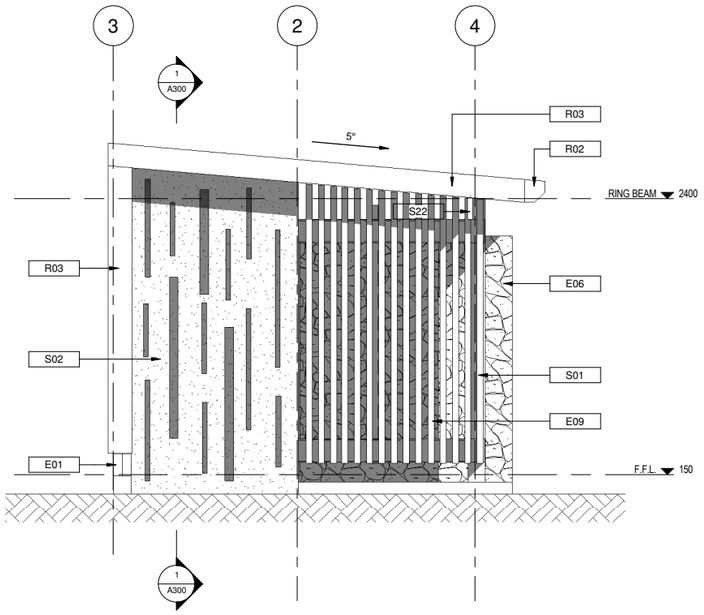

4 SOUTH
1 : 25

NOTES	
Key Value	**Keynote Text**
E01	15 SERIES MASONRY BLOCK FOUNDATION WALL D12 @ 400 CRS VERTICAL, D12 @ 600 CRS HORIZONTAL. PAINTED.
E06	600MM THICK GABION BASKET ROCK WALL.
E09	150X50H3.2 TIMBER SLATTED SHADES. CABBOTS KWILA STAIN FINISH.
E10	GALVANISED PIPE VEHICLE GATE.
R02	CUSTOM COLORBOND GUTTER.
R03	COLORBOND BARGE FLASHING, TO MATCH ROOF SHEETING.
R05	COLORBOND TRIMDEK ROOFING.
S01	150MM DIAMETER MIN TIMBER POSTS (POUMULI OR H5 TREATED) 900MM MIN EMBEDMENT IN CONCRETE, 100MM COVER ALL DIRECTIONS. POLYURETHANE FINISH. NO CARVINGS PERMITTED.
S02	150MM THICK REINFORCED INSITU CONCRETE WALL. D12 @ 200CRS BOTH DIRECTIONS. 'MUSHROOM' COLOURED OXIDE TO CONCRETE MIX. SEAL WITH PETER FELL CLEAR SEALER.
S22	190X45 H3.2 TIMBER BEAM. FIX WITH 2/STAINLESS STEEL M12 BOLTS TO POSTS.

FOR TENDER

REVISIONS	REV	DATE	DESCRIPTION	DWN	ENG	CHK

CLIENT
SAMOA TOURISM AUTHORITY

Kramer Ausenco
PROFESSIONAL PROJECT MANAGERS
ENGINEERS - SURVEYORS - ARCHITECTS
First Floor, Maxkar House Cnr Convent Street and Saleufi Rd, Saleufi P.O. Box 593, Apia, SAMOA
Phone: (685) 30353 Fax: (685) 30355
Email: apia@kramerausenco.com
Web: www.kramerausenco.com

QUALITY	
DRAWN:	DATE:
DRAWING CHECKED:	DATE:
ENGINEER:	DATE:
DESIGN CHECKED:	DATE:
DIRECTOR/MANAGER	DATE:

GEF TOURISM CLIMATE RESILIENCE PROJECT

PROJECT DESCRIPTION
PROPOSED TOILET BLOCK & GATE, VAILOA PALAULI, SAVAI'I

DRAWING TITLE
ELEVATIONS - TOILET BLOCK

PROJECT No. **16290W**

SCALE: AS NOTED FULL SIZE A1

DRAWING No. **A200**

REVISION

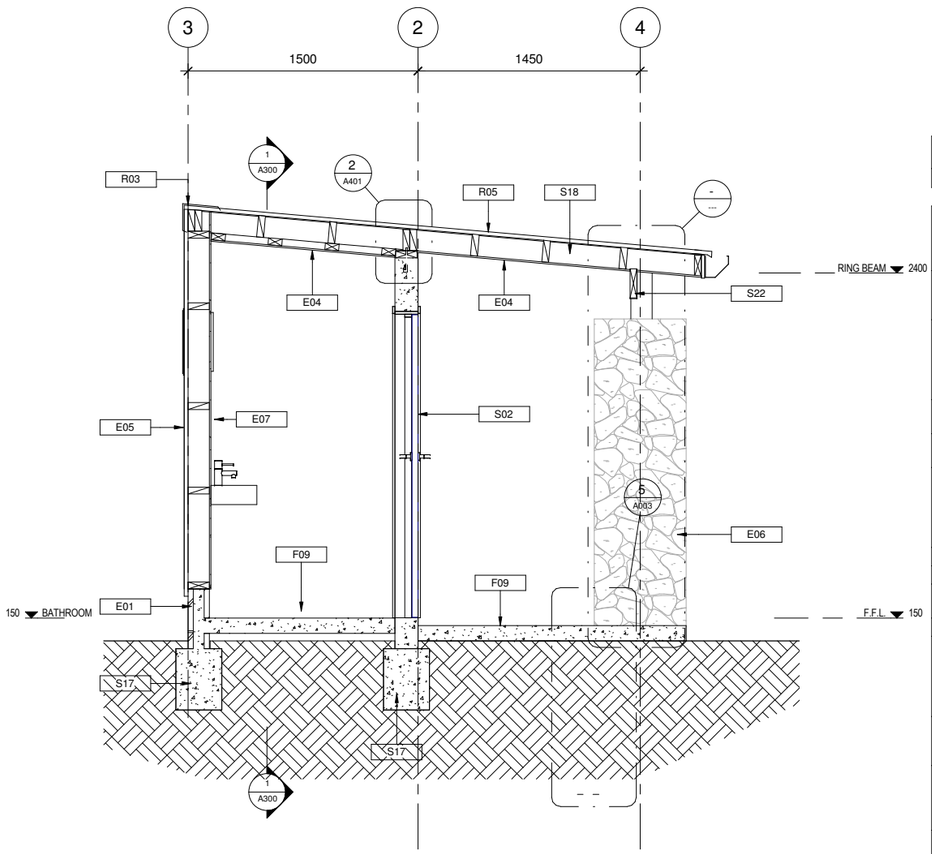

2 SECTION A
1 : 20

NOTES	
Key Value	**Keynote Text**
E01	15 SERIES MASONRY BLOCK FOUNDATION WALL D12 @ 400 CRS VERTICAL, D12 @ 600 CRS HORIZONTAL. PAINTED.
E04	9MM FIBRE CEMENT CEILING/ SOFFIT LINING. SCREW FIXED TO TIMBER FRAMING. PAINT FINISH. BEVEL EDGES.
E05	COLORBOND TRIMDECK PROFILE CLADDING ON BUILDING WRAP ON 140X45 H3.2 TIMBER STUDS @ 600MM MAX CRS, NOGS @ 800CRS.SURFMIST COLOUR.
E06	600MM THICK GABION BASKET ROCK WALL.
E07	20MM THICK H3.2 TIMBER PLANK WALL LINING. CABBOTS CLEAR OIL FINISH.
F09	100MM THICK CONCRETE FLOOR SLAB. SMOOTH TROWEL FINISH. APPLY PETER FELL BLACK OXIDE TO CONCRETE MIX AND CLEAR SEAL WITH PETER FELL SATIN CONCRETE SEALER.
H01	TOILET BOWL/CISTERN.
H02	WALL MOUNTED WASH BASIN.
R03	COLORBOND BARGE FLASHING, TO MATCH ROOF SHEETING.
R05	COLORBOND TRIMDEK ROOFING.
S02	150MM THICK REINFORCED INSITU CONCRETE WALL. D12 @ 200CRS BOTH DIRECTIONS. 'MUSHROOM' COLOURED OXIDE TO CONCRETE MIX. SEAL WITH PETER FELL CLEAR SEALER.
S17	400X300 CONCRETE FOOTING. 2-D16 TOP AND BOTTOM. R6 STIRRUPS @ 300 CRS. 75MM MIN COVER TO REBAR.
S18	140X45 H3.2 TIMBER RAFTERS @ 600MM CRS, FULL DEPTH SOLID BLOCKING @ 450MM MAX CRS. FIX BLOCKING WITH JOIST HANGERS IN BETWEEN RAFTERS.
S22	190X45 H3.2 TIMBER BEAM. FIX WITH 2/STAINLESS STEEL M12 BOLTS TO POSTS.

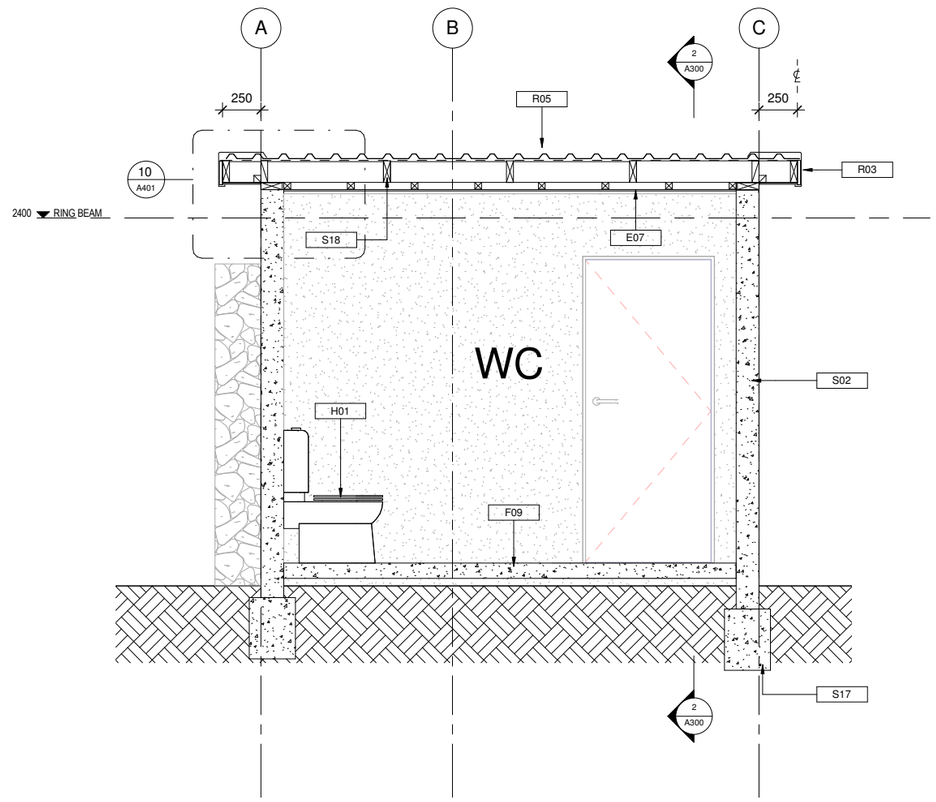

1 SECTION D
1 : 20

FOR TENDER

REVISIONS	REV	DATE	DESCRIPTION	DWN	ENG	CHK

CLIENT
SAMOA TOURISM AUTHORITY

Kramer Ausenco
PROFESSIONAL PROJECT MANAGERS
ENGINEERS - SURVEYORS - ARCHITECTS
First Floor, Maxkar House Cnr Convent Street and Saleufi Rd, Saleufi P.O. Box 593, Apia, SAMOA
Phone: (685) 30353 Fax: (685) 30355
Email: apia@kramerausenco.com
Web: www.kramerausenco.com

QUALITY

DRAWN:	DATE:
DRAWING CHECKED:	DATE:
ENGINEER:	DATE:
DESIGN CHECKED:	DATE:
DIRECTOR/MANAGER	DATE:

GEF TOURISM CLIMATE RESILIENCE PROJECT

PROJECT DESCRIPTION
PROPOSED TOILET BLOCK & GATE, VAILOA PALAULI, SAVAI'I

DRAWING TITLE
SECTIONS - TOILET BLOCK

PROJECT No. **16290W**

SCALE: AS NOTED FULL SIZE A1

DRAWING No. **A300**

REVISION

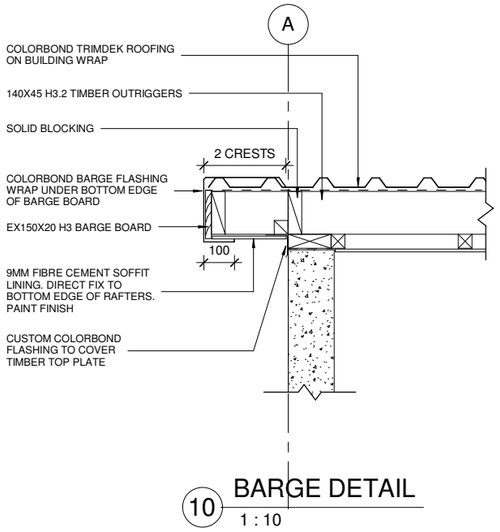

10 BARGE DETAIL
1 : 10

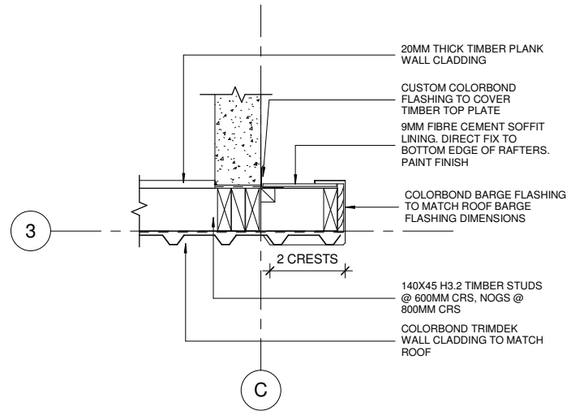

1 TIMBER WALL OVERHANG DETAIL (PLAN)
1 : 10

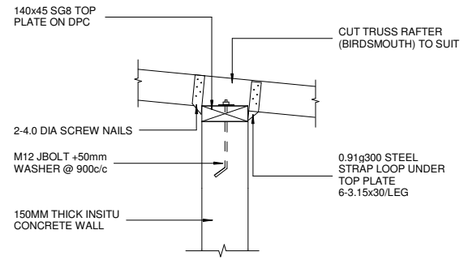

2 WALL TO ROOF JUNCTION
1 : 10

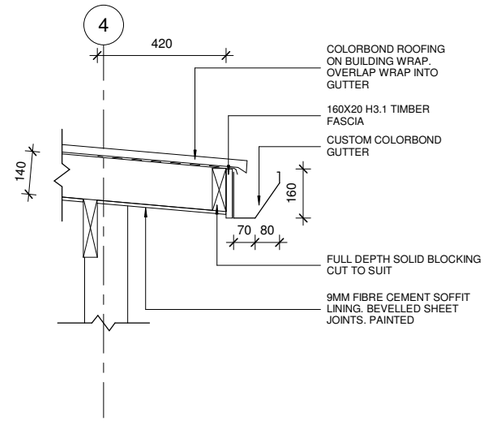

7 TYPICAL EAVES DETAIL
1 : 10

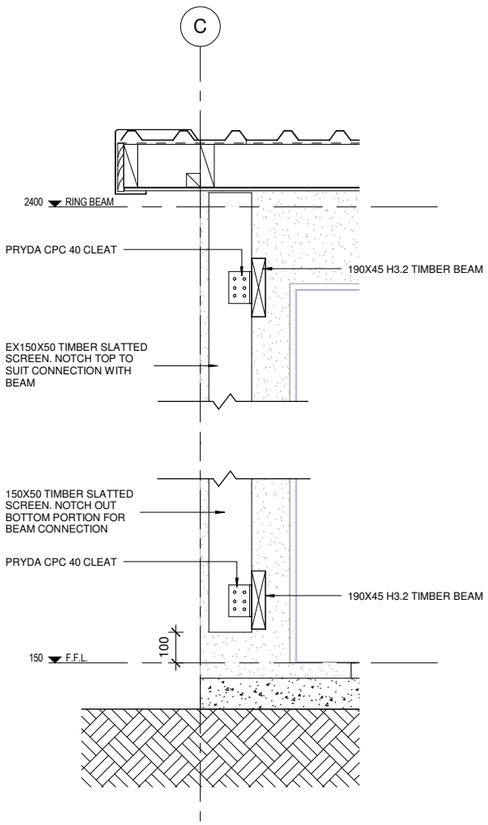

3 TIMBER SLAT DETAIL
1 : 10

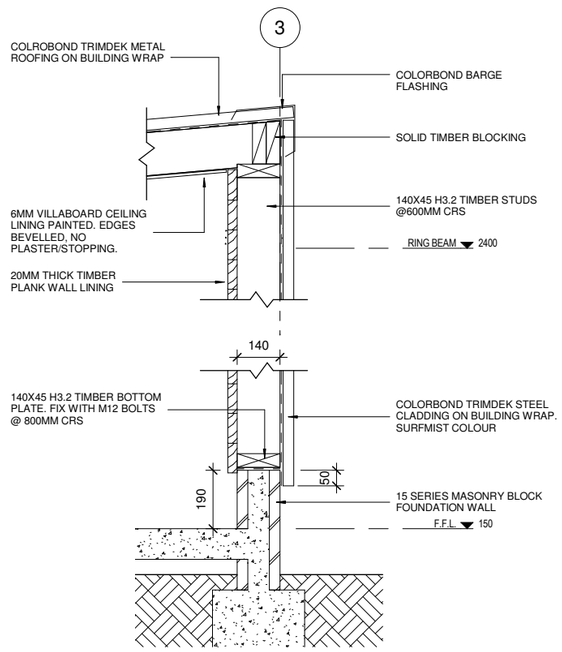

6 TIMBER WALL SECTION
1 : 10

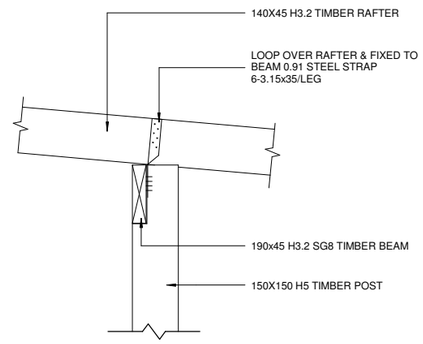

4 RAFTER TO BEAM DETAIL
1 : 10

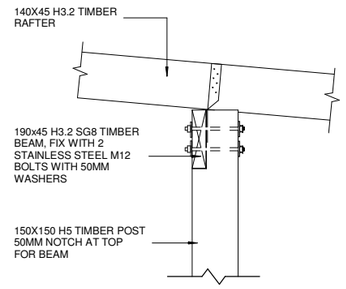

5 POST TO BEAM DETAIL
1 : 10

FOR TENDER

REVISIONS	REV	DATE	DESCRIPTION	DWN	ENG	CHK

CLIENT
SAMOA TOURISM AUTHORITY

Kramer Ausenco
PROFESSIONAL PROJECT MANAGERS
ENGINEERS - SURVEYORS - ARCHITECTS
First Floor, Maxkar House Cnr Convent Street and Saleufi Rd, Saleufi P.O. Box 593, Apia, SAMOA
Phone: (685) 30353 Fax: (685) 30355
Email: apia@kramerausenco.com
Web: www.kramerausenco.com

QUALITY	
DRAWN:	DATE:
DRAWING CHECKED:	DATE:
ENGINEER:	DATE:
DESIGN CHECKED:	DATE:
DIRECTOR/MANAGER	DATE:

GEF TOURISM CLIMATE RESILIENCE PROJECT

PROJECT DESCRIPTION
PROPOSED TOILET BLOCK & GATE, VAILOA PALAULI, SAVAI'I

DRAWING TITLE
CONSTRUCTION DETAILS - TOILET BLOCK

PROJECT No. **16290W**

SCALE: AS NOTED FULL SIZE A1

DRAWING No. **A401**

REVISION

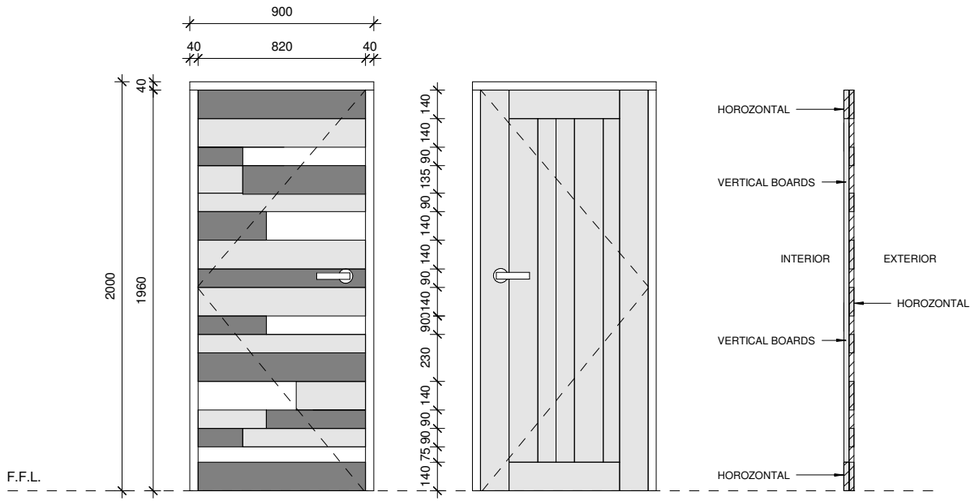

EXTERIOR ELEVATION INTERIOR ELEVATION SECTION

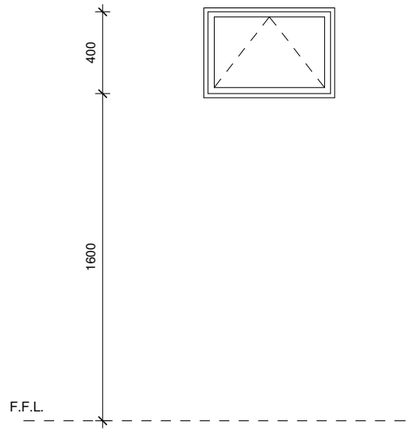

DOOR FINISHES KEY

- CABOT'S EXTERIOR OIL STAIN - KWILA
- CABOT'S EXTERIOR OIL STAIN - PUKA S
- CABOT'S EXTERIOR OIL STAIN - SILVER BEECH

DOOR NO.	D01
SOLID CORE TIMBER DOOR IN ALUMINUM FRAME. LOCAKBLE. EX25MM THICK TIMBER BOARDS. OIL STAIN FINISH. SCHLAGE VERTA SERIES DOOR LEVER. STAINLESS STEEL.	

WIN. NO.	W01
ANODISED ALUMINUM FRAME AWNING WINDOW. OPAQUE GLASS	

NOTE:

1.ALL OPENING DIMENSIONS ROUGH OPENING DIMENSIONS ONLY

2. ENSURE ALL TIMBER BOARDS ARE FITTED AND BONDED TIGHTLY.

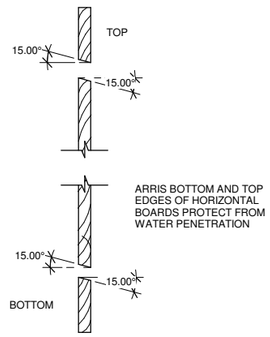

2 HORIZONTAL BOARD DETAIL

1 : 5

FOR TENDER

REVISIONS	REV	DATE	DESCRIPTION	DWN	ENG	CHK

CLIENT
SAMOA TOURISM AUTHORITY

Kramer Ausenco
PROFESSIONAL PROJECT MANAGERS
ENGINEERS - SURVEYORS - ARCHITECTS
First Floor, Maxkar House Cnr Convent Street and Saleufi Rd, Saleufi P.O. Box 593, Apia, SAMOA
Phone: (685) 30353 Fax: (685) 30355
Email: apia@kramerausenco.com
Web: www.kramerausenco.com

QUALITY

DRAWN:	DATE:
DRAWING CHECKED:	DATE:
ENGINEER:	DATE:
DESIGN CHECKED:	DATE:
DIRECTOR/MANAGER	DATE:

GEF TOURISM CLIMATE RESILIENCE PROJECT

PROJECT DESCRIPTION
PROPOSED TOILET BLOCK & GATE, VAILOA PALAULI, SAVAI'I

DRAWING TITLE
DOOR & WINDOW SCHEDULE - TOILET BLOCK

PROJECT No. **16290W**

SCALE: AS NOTED FULL SIZE A1

DRAWING No. **A501**

REVISION

1 GATE VALVE FOR TAP/SHOWER
1 : 10

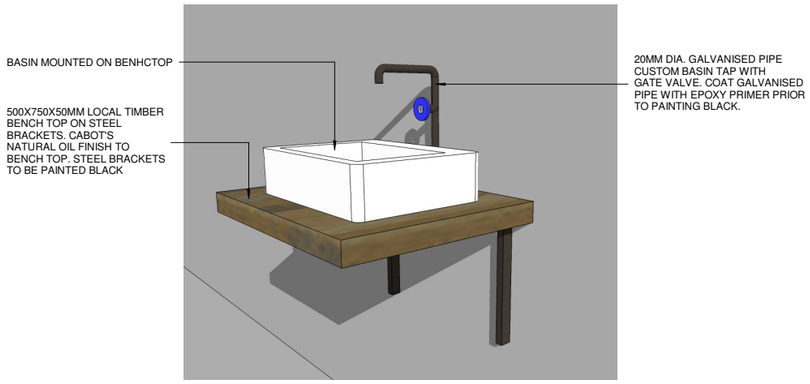

PERSPECTIVE

2 BASIN DETAIL - PERSPECTIVE
1 : 10

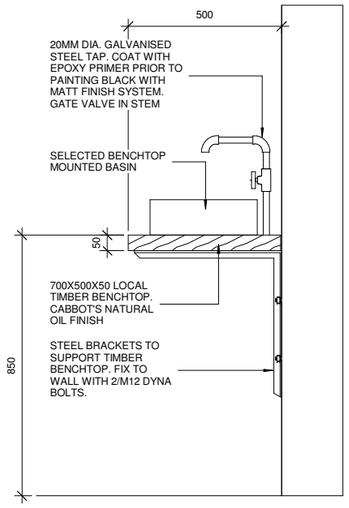

3 BASIN DETAILS - SECTION
1 : 10

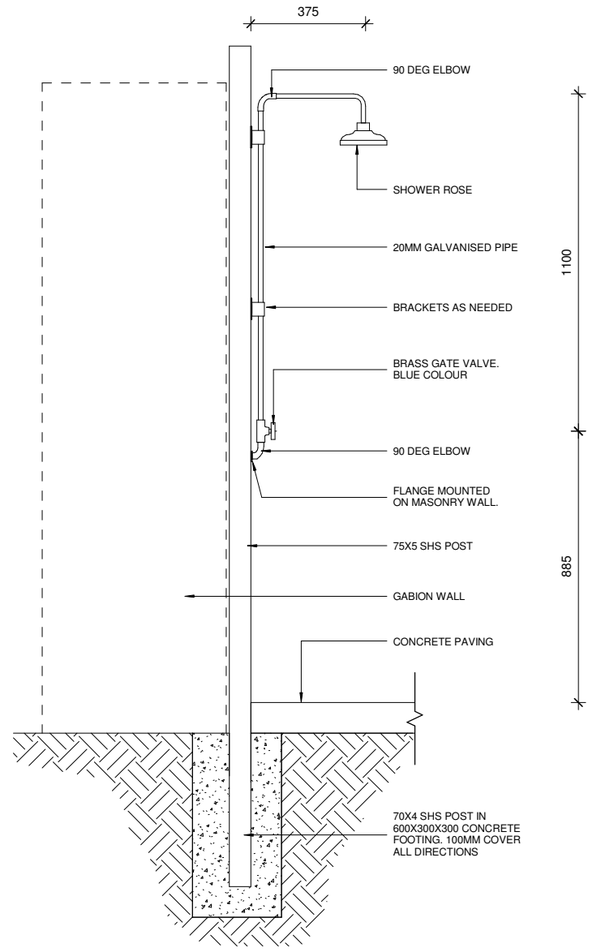

4 SHOWER SIDE ELEVATION
1 : 10

FOR TENDER

REVISIONS	REV	DATE	DESCRIPTION	DWN	ENG	CHK

CLIENT
SAMOA TOURISM AUTHORITY

Kramer Ausenco
PROFESSIONAL PROJECT MANAGERS
ENGINEERS - SURVEYORS - ARCHITECTS
First Floor, Maxkar House Cnr Convent Street and Saleufi Rd, Saleufi P.O. Box 593, Apia, SAMOA
Phone: (685) 30353 Fax: (685) 30355
Email: apia@kramerausenco.com
Web: www.kramerausenco.com

QUALITY

DRAWN:	DATE:
DRAWING CHECKED:	DATE:
ENGINEER:	DATE:
DESIGN CHECKED:	DATE:
DIRECTOR/MANAGER	DATE:

GEF TOURISM CLIMATE RESILIENCE PROJECT

PROJECT DESCRIPTION
PROPOSED TOILET BLOCK & GATE, VAILOA PALAULI, SAVAI'I

DRAWING TITLE
BATHROOM DETAILS - TOILET BLOCK

PROJECT No. **16290W**

SCALE: AS NOTED FULL SIZE A1

DRAWING No. **A502**

REVISION

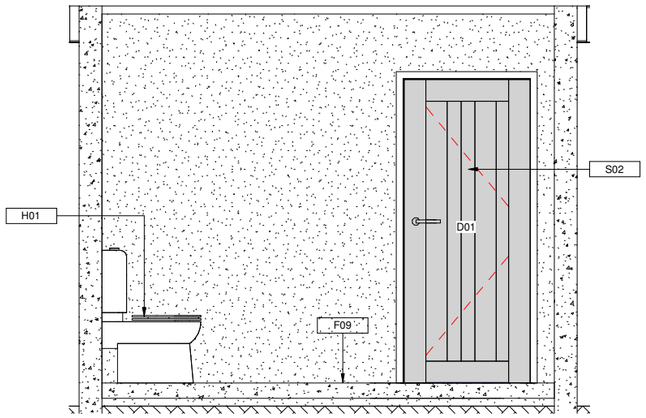

1 INTERNAL ELEVATION 1
1 : 20

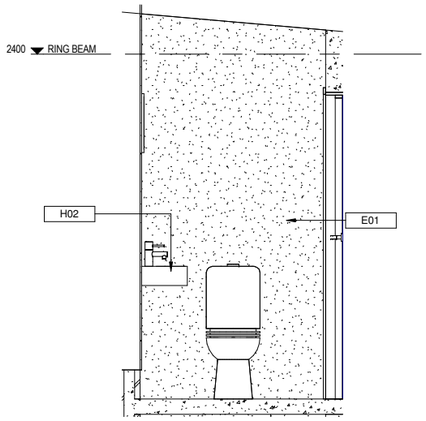

2 INTERNAL ELEVATION 2
1 : 20

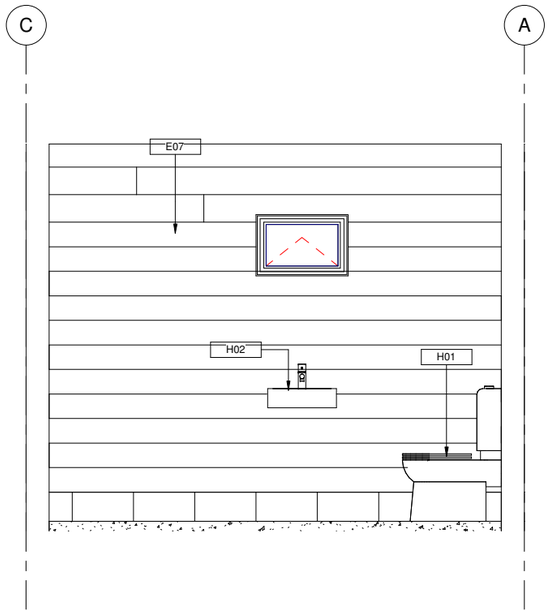

3 INTERNAL ELEVATION 3
1 : 20

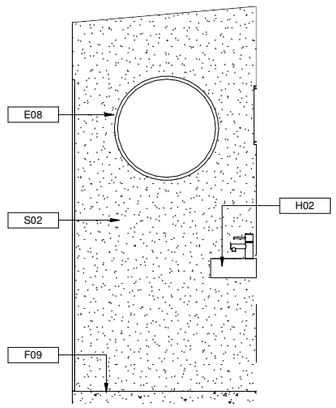

4 INTENRAL ELEVATION 4
1 : 20

NOTES	
Key Value	**Keynote Text**
E01	15 SERIES MASONRY BLOCK FOUNDATION WALL D12 @ 400 CRS VERTICAL, D12 @ 600 CRS HORIZONTAL. PAINTED.
E07	20MM THICK H3.2 TIMBER PLANK WALL LINING. CABBOTS CLEAR OIL FINISH.
E08	CIRCULAR MIRROR.
F09	100MM THICK CONCRETE FLOOR SLAB. SMOOTH TROWEL FINISH. APPLY PETER FELL BLACK OXIDE TO CONCRETE MIX AND CLEAR SEAL WITH PETER FELL SATIN CONCRETE SEALER.
H01	TOILET BOWL/CISTERN.
H02	WALL MOUNTED WASH BASIN.
S02	150MM THICK REINFORCED INSITU CONCRETE WALL. D12 @ 200CRS BOTH DIRECTIONS. 'MUSHROOM' COLOURED OXIDE TO CONCRETE MIX. SEAL WITH PETER FELL CLEAR SEALER.

FOR TENDER

REVISIONS	REV	DATE	DESCRIPTION	DWN	ENG	CHK

CLIENT
SAMOA TOURISM AUTHORITY

Kramer Ausenco
PROFESSIONAL PROJECT MANAGERS
ENGINEERS - SURVEYORS - ARCHITECTS
First Floor, Maxkar House Cnr Convent Street and Saleufi Rd, Saleufi P.O. Box 593, Apia, SAMOA
Phone: (685) 30353 Fax: (685) 30355
Email: apia@kramerausenco.com
Web: www.kramerausenco.com

QUALITY

DRAWN:	DATE:
DRAWING CHECKED:	DATE:
ENGINEER:	DATE:
DESIGN CHECKED:	DATE:
DIRECTOR/MANAGER	DATE:

GEF TOURISM CLIMATE RESILIENCE PROJECT

PROJECT DESCRIPTION
PROPOSED TOILET BLOCK & GATE, VAILOA PALAULI, SAVAI'I

DRAWING TITLE
INTERNAL ELEVATIONS - TOILET BLOCK

PROJECT No. **16290W**

SCALE: AS NOTED FULL SIZE A1

DRAWING No. **A503**

REVISION

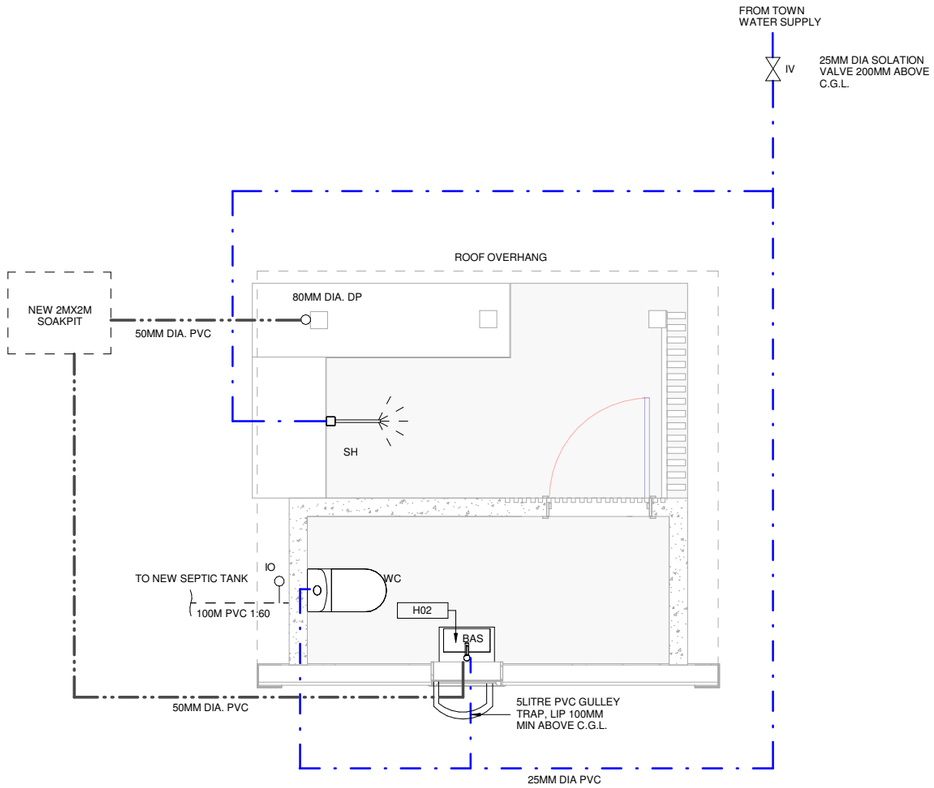

1 PLUMBING/HYDRAULICS LAYOUT
1 : 25

HYDRAULICS LEGEND

IO	INSPECTION OPENING
IOS	INSPECTION OPENING TO SURFACE
ORG	OVERFLOW RELIEF GULLY
IV	ISOLATION VALVE TO BUILDING
WC	WATER CLOSET
SH	SHOWER
BAS	BASIN
— · · —	DIRECT CONNECT WATER SUPPLY
— · · —	STORMWATER/ GREY WATER
— — —	SEWAGE PIPING (BLACK WATER)

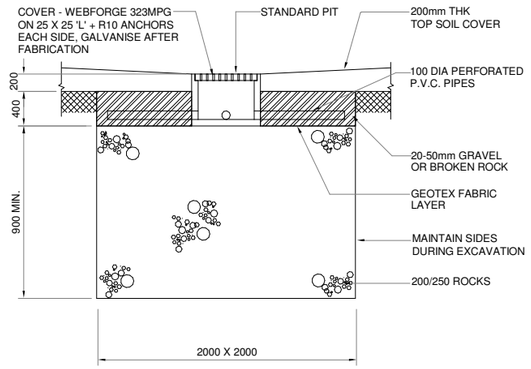

SECTION - SOAKAGE PIT (SP-A)
NTS

3 SOAKAGE PIT DETAIL
1 : 20

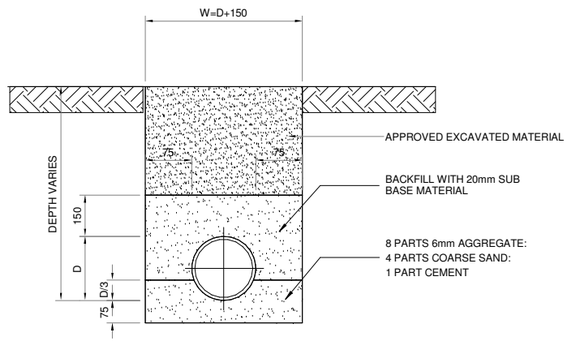

STORMWATER PIPE BEDDING
DETAIL UNDER GROUND
NTS

2 PIPE BEDDING DETAIL
1 : 20

FOR TENDER

REVISIONS	REV	DATE	DESCRIPTION	DWN	ENG	CHK

CLIENT
SAMOA TOURISM AUTHORITY

Kramer Ausenco
PROFESSIONAL PROJECT MANAGERS
ENGINEERS - SURVEYORS - ARCHITECTS
First Floor, Maxkar House Cnr Convent Street and Saleufi Rd, Saleufi P.O. Box 593, Apia, SAMOA
Phone: (685) 30353 Fax: (685) 30355
Email: apia@kramerausenco.com
Web: www.kramerausenco.com

QUALITY

DRAWN:	DATE:
DRAWING CHECKED:	DATE:
ENGINEER:	DATE:
DESIGN CHECKED:	DATE:
DIRECTOR/MANAGER	DATE:

GEF TOURISM CLIMATE RESILIENCE PROJECT

PROJECT DESCRIPTION
PROPOSED TOILET BLOCK & GATE, VAILOA PALAULI, SAVAI'I

DRAWING TITLE
HYDRAULIC DESIGN - TOILET BLOCK

PROJECT No. **16290W**
SCALE: AS NOTED FULL SIZE A1
DRAWING No. **H101**
REVISION

PLAN - SEPTIC TANKN TYPE 1

Scale 1:20

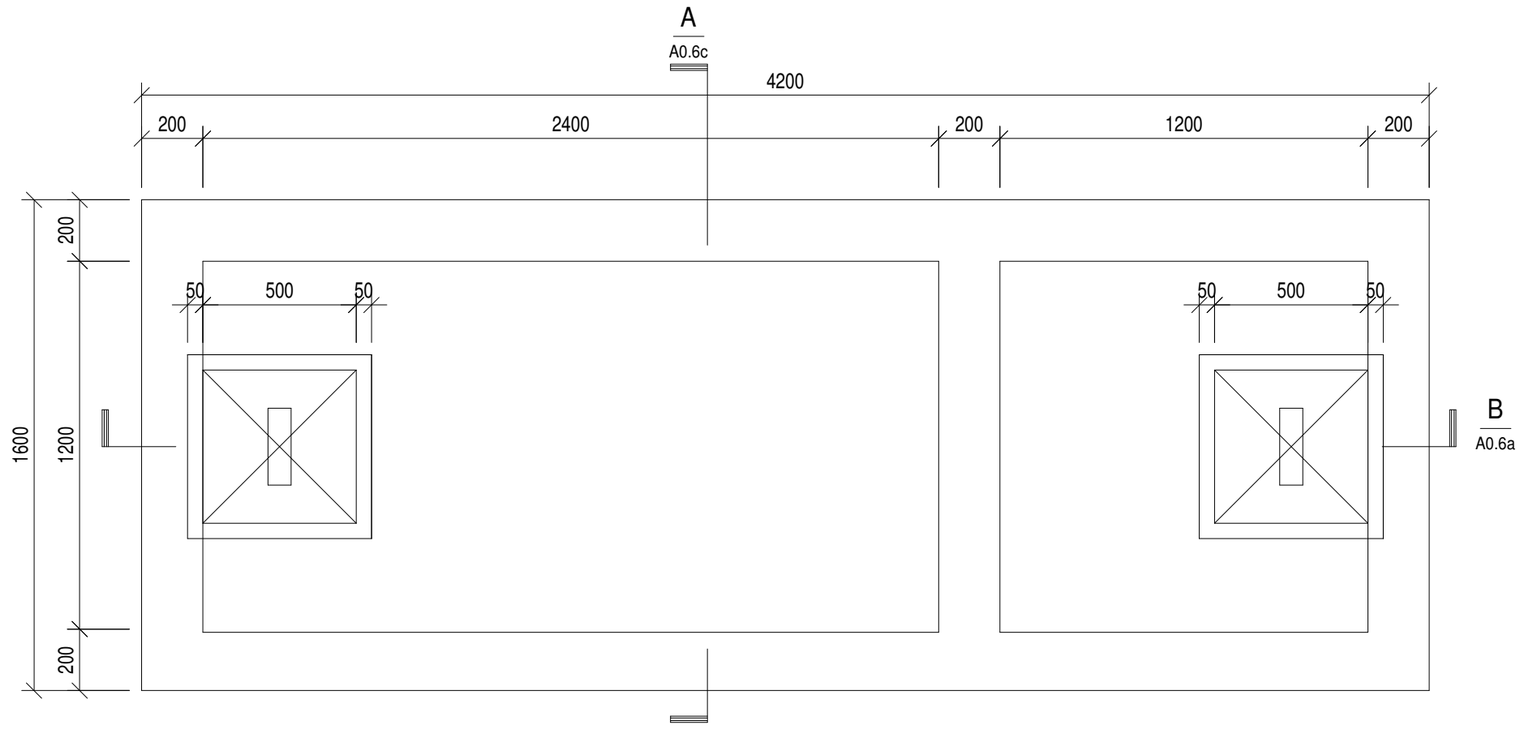

PLAN - SEPTIC TANK TYPE 2

Scale 1:20

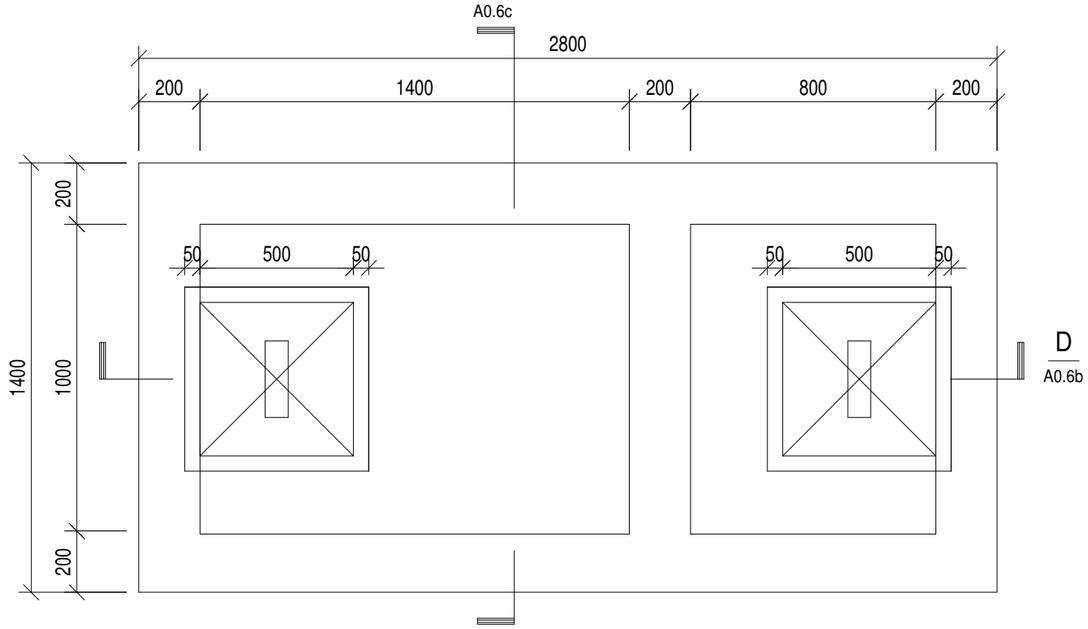

FOR TENDER

REVISIONS	REV	DATE	DESCRIPTION	DWN	ENG	CHK

CLIENT
SAMOA TOURISM AUTHORITY

Kramer Ausenco
PROFESSIONAL PROJECT MANAGERS
ENGINEERS - SURVEYORS - ARCHITECTS
First Floor, Maxkar House Cnr Convent Street and Saleufi Rd, Saleufi P.O. Box 593, Apia, SAMOA
Phone: (685) 30353 Fax: (685) 30355
Email: apia@kramerausenco.com
Web: www.kramerausenco.com

QUALITY	
DRAWN:	DATE:
DRAWING CHECKED:	DATE:
ENGINEER:	DATE:
DESIGN CHECKED:	DATE:
DIRECTOR/MANAGER	DATE:

GEF TOURISM CLIMATE RESILIENCE PROJECT

PROJECT DESCRIPTION
PROPOSED TOILET BLOCK & GATE, VAILOA PALAULI, SAVAI'I

DRAWING TITLE
SEPTIC TANK PLANS

PROJECT No. **16290W**

SCALE: AS NOTED FULL SIZE A1

DRAWING No. **H102**

REVISION

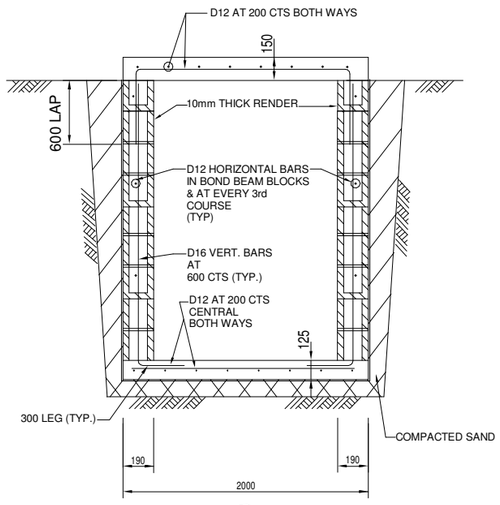

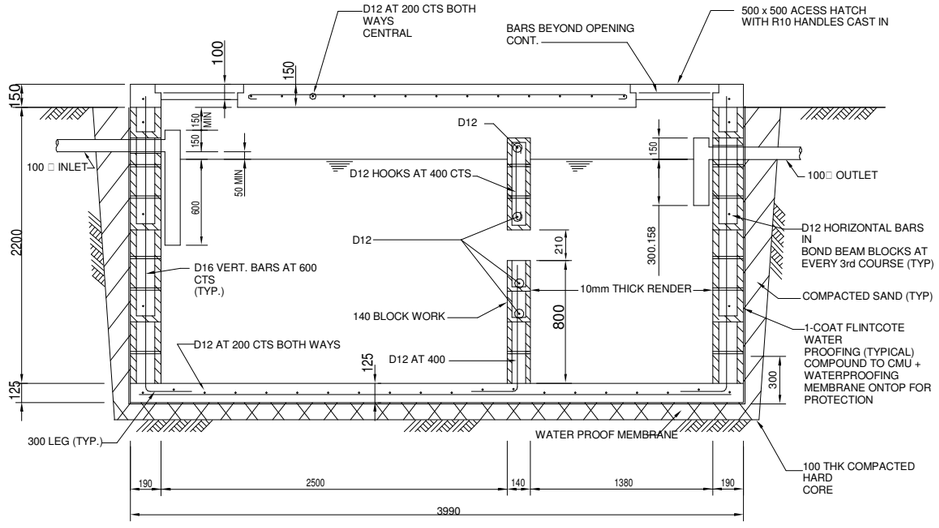

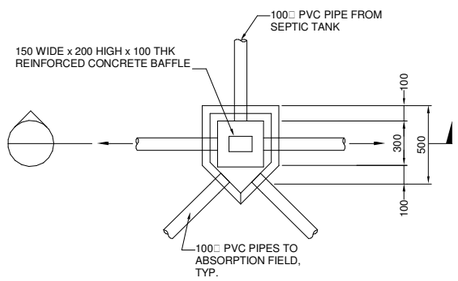

PLAN - DISTRIBUTION BOX

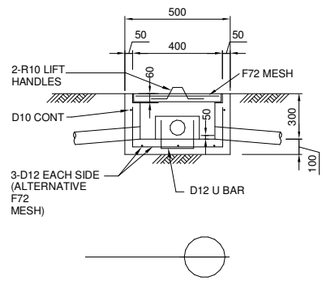

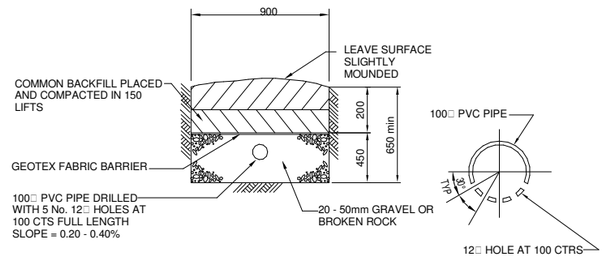

ABSORPTION FIELD TRENCH SECTION
1:20

FOR TENDER

REVISIONS	REV	DATE	DESCRIPTION	DWN	ENG	CHK

CLIENT
SAMOA TOURISM AUTHORITY

Kramer Ausenco
PROFESSIONAL PROJECT MANAGERS
ENGINEERS - SURVEYORS - ARCHITECTS
First Floor, Maxkar House Cnr Convent Street and Saleufi Rd, Saleufi P.O. Box 593, Apia, SAMOA
Phone: (685) 30353 Fax: (685) 30355
Email: apia@kramerausenco.com
Web: www.kramerausenco.com

QUALITY	
DRAWN:	DATE:
DRAWING CHECKED:	DATE:
ENGINEER:	DATE:
DESIGN CHECKED:	DATE:
DIRECTOR/MANAGER	DATE:

GEF TOURISM CLIMATE RESILIENCE PROJECT

PROJECT DESCRIPTION
PROPOSED TOILET BLOCK & GATE, VAILOA PALAULI, SAVAI'I

DRAWING TITLE
SEPTIC TANK SECTIONS & DETAILS

PROJECT No. **16290W**

SCALE: AS NOTED FULL SIZE A1

DRAWING No. **H103**

REVISION