UN House Lesotho Heating Ventilation and Air Conditioning Assessment Report 2016

Prepared by: Energy Management Solutions

Contents:

1. Background
2. Objective
3. Acronyms
4. Methodology
5. Current system analysis
6. New HVAC requirements (Based on current offices layout)
7. Roll out Plan
8. Estimated Cost
9. Possible Energy Saving
10. Recommendations

1. Background

United Nations in Lesotho is comprised of the following agencies: UNDP, UNICEF, UNAIDS, UNPF, WFP, WHO, FAO, and the World Bank. These agencies are all housed at the UN House located on United Nations Road, Maseru.

The United Nations launched the "Sustainable Energy For All" initiative and it is co-led by the World Bank. The goal of this initiative is to double the rate of improvement in energy efficiency globally by the year 2030. This goal was articulated in the report of an expert panel organized by the UN Foundation in 2007 titled "Realizing the Potential of Energy Efficiency".

Toward that end, the UN Foundation supported the launch of a " Global Energy Efficiency Accelerator Platform" at the UN Climate Summit in September 2014. The platform's objective was to promote a major scaling up of energy efficiency activities and investments throughout the world through technical assistance, support and collaboration.
It is as a result of these efforts that energy efficiency initiatives have been and are being implemented on UN buildings throughout the world.

The accompanying report is an assessment of electrical consumption of the UN house in Maseru, the goal of which is to recommend energy efficiency interventions that will lead to the above goals.

2. Objective

The Heat, Ventilation, and Air Conditioning (HVAC) assessment was carried out with the following objectives in mind:

- To assess the state of the current HVAC system in order to determine if the system needs to be repaired or replaced.
- In the case that the HVAC system needs to be replaced, the development of new HVAC requirements as well as technical specifications for an HVAC system that will best suit the building and achieve energy efficiency.
- To provide the estimated cost and the recommended roll out plan that will guide the procurement of the new HVAC system.

3. Acronyms
   HVAC – Heating Ventilating and Air Conditioning
   BMS - Building Management System
   BTU - British Thermal Unit
   VRV/F - Variable Refrigerant Volume/Flow

4. Methodology

3.1 Data Collection

A physical inspection of every room in the UN house was performed. Dimensional data of the rooms and windows was taken and other electrical devices as well as the power ratings of each device were noted down.

3.2 Data Analysis and Calculations

A calculation of the area of each room and the area of the windows in the room was performed, based on the data collected. The average usage of the devices and their power consumption was determined. All this data was used to determine the heating and cooling load in each room in BTUs.

3.3 Developing the specifications

With the data collected and analyzed and the heating and cooling loads determined, the technical specifications for the indoor unit for each room and that of the outdoor units for the whole floor were determined.

3.4 Report Compilation

A report detailing the specifications for the equipment required for both the indoor and outdoor units was compiled.

5. Current System Analysis

An analysis and assessment of the current HVAC system was performed and the following findings were made:

- The current HVAC system on the building is over twenty years old. Only one floor of the building is functional as a result of the age of the unit. There seems to have been a lack of proper maintenance over the lifetime of the HVAC system with repairs being performed by different contractors that had a negative effect on the lifespan of the equipment.

Had there been a dedicated plan and team, the lifespan of the equipment could have been extended until such time that an orderly retrofit plan was in place.

- The refrigerant used on the current system, the R22, is currently being phased out and its production will cease in 2016. As a result, its price has increased significantly as its availability is decreasing over time. It is therefore more cost effective to opt for the installation of new equipment that will use the new R410A refrigerant.

- The condition of the rooftop units on the current system is such that repairs are more costly because the repair companies that have been performing repairs and maintenance have left a mess in and around the equipment that makes it very difficult for anyone who is not familiar with the equipment and layout to be

able to perform any additional repairs on the units. In addition to this, the equipment used on these units, especially the compressors, will also be out of production as of this year due to the fact that their specifications were intended to be compatible with the R22 refrigerant rendering the current equipment obsolete.

Based on the above findings, it is therefore our recommendation that the HVAC system should be replaced and not repaired and a proper repairs and maintenance plan be put in place for the lifetime of the new HVAC system.

5. New HVAC requirements (Based on current offices layout)

The installation of new equipment can bring with it a lot of benefits that contribute to the system being more efficient in both cooling and heating the rooms and the building.

- The running costs of the system are much lower because of the advanced compressor technology such as:
  - Variable speed operation of the compressor that precisely matches compressor speed to heating or cooling demand level thereby maximizing comfort and minimizing energy consumption.
  - Asymmetric scroll design, which reduces friction and improves efficiency and compressor longevity.
  - Dual inverter scroll compressor system, which responds to rapid changes in building load during periods of heavy demand, as well as operates both compressors at more efficient speeds throughout the entire demand range.
- Automation remains an option in bringing in even more building energy efficiency. It incorporates centralized control of multiple Variable Refrigerant Flow (VRF) systems and provides advanced scheduling, operation and alarm history management, which can be accessed remotely for monitoring and troubleshooting. Communication with the system is possible from virtually anywhere in the world. System set points can be modified and user-definable alarms can be received to ensure immediate notification when events occur. All this is possible via connection to the Internet.
- An alternative to central control and full-blown Building Management System, (BMS), is installation of occupancy sensors. These let you worry less about whether the system was turned off on leaving the room because after a few minutes of the room being unoccupied, the unit will turn off. The advantage of occupancy sensors is that they can be seamlessly integrated into BMS if and when it is installed on the building thus adding more energy savings.

Calculate and Selection Result

1. Project Parameter

Project Name:	United Nations House (UNDP)
Nation:	Lesotho
Location:	Maseru
Address:	UN Building United Nations Road
Name:	UNDP
Job Title:	Proposed HVAC system
Outdoor barometric pressure in summer (Pa):	87420
Outdoor mean air velocity in summer (m/s):	2.2
Summer Outdoor Dry-bulb:	35
Summer Outdoor Wet-bulb:	24
Winter Outdoor Dry-bulb:	7
Winter Outdoor Wet-bulb:	6

2. FF Zone 1(UNICEF)

2.1 Specifications

Room	Description	RTC kW	RTH kW	Air Flow m^3/h	Static Pressure Pa	Power Supply	Rated Load Amperes
IU-1	Indoor Unit	3.6	4	610	0	220-240,50,1	N/A
IU-2	Indoor Unit	4.5	5	610	0	220-240,50,1	N/A
IU-3	Indoor Unit	2.8	3.2	522	0	220-240,50,1	N/A
IU-4	Indoor Unit	2.8	3.2	522	0	220-240,50,1	N/A
IU-5	Indoor Unit	4.5	5	610	0	220-240,50,1	N/A
IU-6	Indoor Unit	3.6	4	610	0	220-240,50,1	N/A
IU-7	Indoor Unit	4.5	5	610	0	220-240,50,1	N/A
Outdoor	Outdoor Unit	26.3	29.4	12000	N/A	380-415-3-50	N/A

RTC: Required total cooling capacity
RTH: Required total heating capacity

2.2 Pipe and Refrigerant Distributors

IU quantity	**7/16**
Combination Ratio	93.93%
Additional Refrigerant	1.575kg
Total pipe length	34.5m/1000m
Furthest Actual	15m/175m
Furthest equivalent	16.5m/200m
Drop height between IU and IU	0m/30m
Drop height between IU and OU	0m/70m
Available Capacity Cooling	26.3 kW
Available Capacity Heating	21.5 kW
1 branch	0.5m Copper pipe.

Pipe

No	**Length**	**Gas Pipe**	**Liquid Pipe**
(1)	3.0m	Φ22.2, Φ19.1	Φ12.7
(2)	3.0m	Φ15.9	Φ9.53
(3)	3.0m	Φ15.9	Φ9.53
(4)	3.0m	Φ15.9	Φ9.53
(5)	3.0m	Φ12.7	Φ6.35
(6)	3.0m	Φ12.7	Φ6.35
(7)	3.0m	Φ12.7	Φ6.35
(8)	3.0m	Φ12.7	Φ6.35
(9)	3.0m	Φ12.7	Φ6.35
(10)	3.0m	Φ12.7	Φ6.35
(11)	3.0m	Φ12.7	Φ6.35

2.3 Drawing

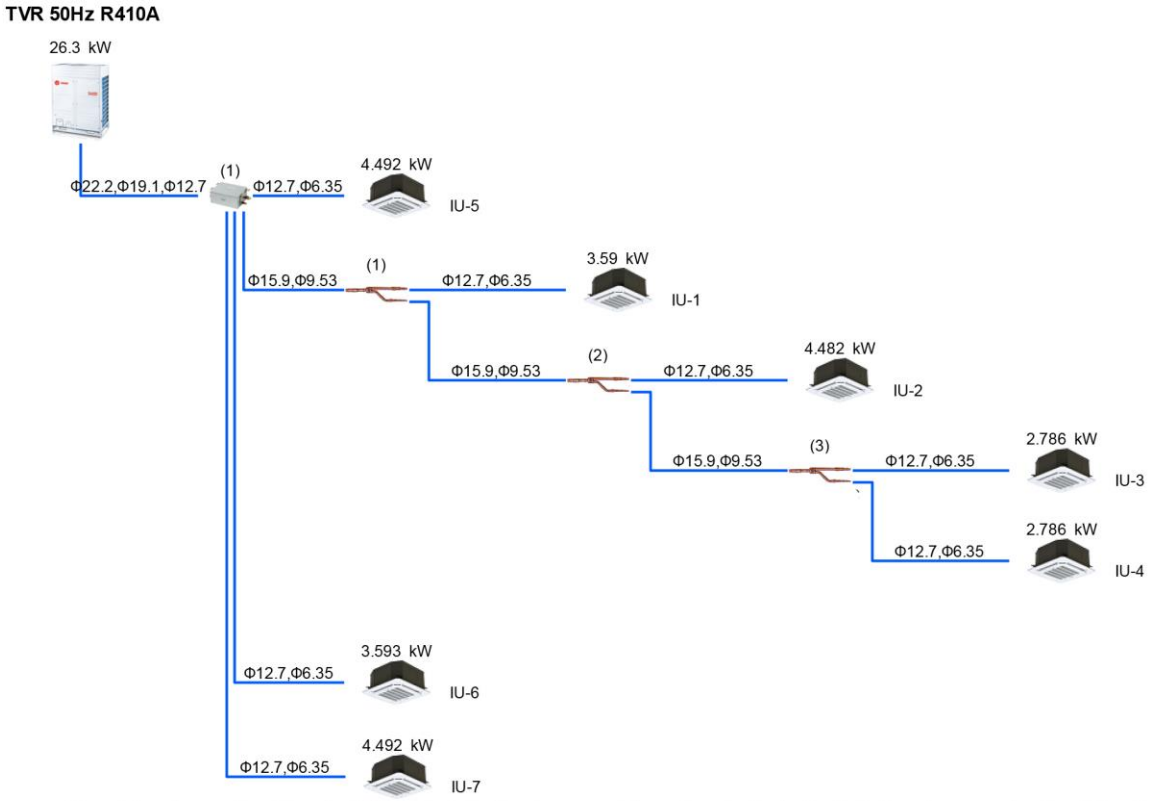

The piping size may be different with the actual situation because of the software's illustration limitation, please confirm the piping size according to the installation manual before installation.

3. FF Zone 2 (FAO)

3.1 Specifications

Room	Description	RTC kW	RTH kW	Air Flow m^3/h	Static Pressure Pa	Power Supply	Rated Load Amperes
IU-1	Indoor Unit	2.8	3.2	522	0	220-240,50,1	N/A
IU-2	Indoor Unit	2.8	3.2	522	0	220-240,50,1	N/A
IU-3	Indoor Unit	2.8	3.2	522	0	220-240,50,1	N/A
IU-4	Indoor Unit	2.8	3.2	522	0	220-240,50,1	N/A
IU-5	Indoor Unit	2.8	3.2	522	0	220-240,50,1	N/A
IU-6	Indoor Unit	2.8	3.2	522	0	220-240,50,1	N/A
IU-7	Indoor Unit	3.6	4	610	0	220-240,50,1	N/A
IU-8	Indoor Unit	7.1	8	1157	0	220-240,50,1	N/A
Outdoor	Outdoor Unit	27.5	31.2	12000	N/A	380-415-3-50	N/A

RTC: Required total cooling capacity
RTH: Required total heating capacity

3.2 Pipe and Refrigerant Distributors

IU quantity	**8/16**
Combination Ratio	98.21%
Additional Refrigerant	1.953kg
Total pipe length	41m/1000m
Furthest Actual	12m/175m
Furthest equivalent	13m/200m
Drop height between IU and IU	0m/30m
Drop height between IU and OU	0m/70m
Available Capacity Cooling	27.5 kW
Available Capacity Heating	19.9 kW
1 branch	0.5m Copper pipe.

Pipe

No	**Length**	**Gas Pipe**	**Liquid Pipe**
(1)	3.0m	Φ22.2, Φ19.1	Φ12.7
(2)	3.0m	Φ15.9	Φ9.53
(3)	3.0m	Φ15.9	Φ9.53
(4)	3.0m	Φ15.9	Φ9.53
(5)	3.0m	Φ15.9	Φ9.53
(6)	3.0m	Φ12.7	Φ6.35
(7)	3.0m	Φ12.7	Φ6.35
(8)	3.0m	Φ12.7	Φ6.35
(9)	3.0m	Φ12.7	Φ6.35
(10)	3.0m	Φ12.7	Φ6.35
(11)	3.0m	Φ12.7	Φ6.35
(12)	3.0m	Φ12.7	Φ6.35
(13)	3.0m	Φ15.9	Φ9.53

3.3 Drawing

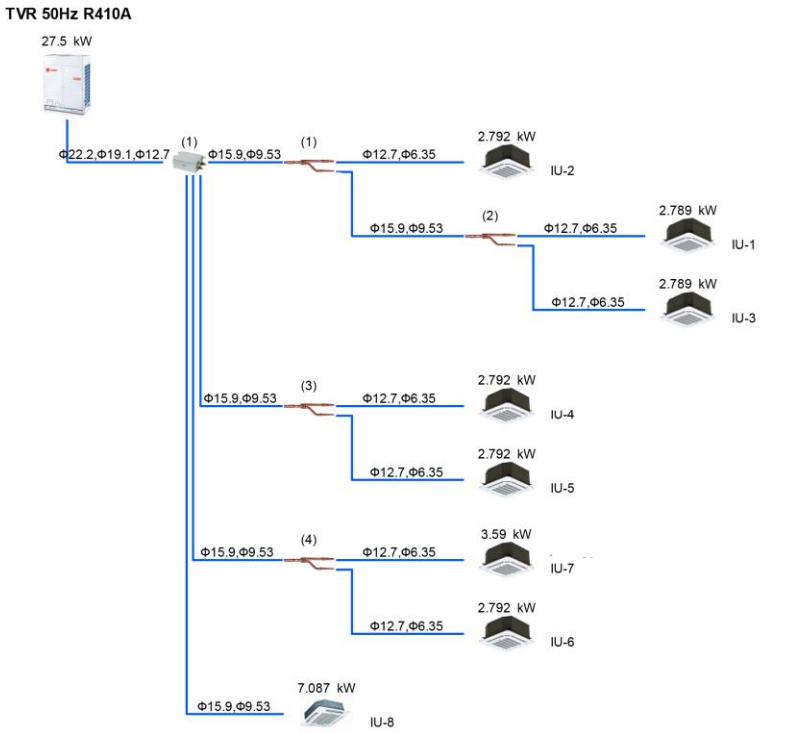

The piping size may be different with the actual situation because of the software's illustration limitation, please confirm the piping size according to the installation manual before installation.

4. FF Zone 3(WHO)

4.1 Specifications

Room	Description	RTC kW	RTH kW	Air Flow m^3/h	Static Pressure Pa	Power Supply	Rated Load Amperes
IU-1	Indoor Unit	5.6	6.3	864	0	220-240,50,1	N/A
IU-2	Indoor Unit	7.1	8	1157	0	220-240,50,1	N/A
IU-4	Indoor Unit	2.8	3.2	522	0	220-240,50,1	N/A
IU-5	Indoor Unit	2.8	3.2	522	0	220-240,50,1	N/A
IU-6	Indoor Unit	3.6	4	610	0	220-240,50,1	N/A
IU-6	Indoor Unit	2.8	3.2	522	0	220-240,50,1	N/A
IU-7	Indoor Unit	2.8	3.2	522	0	220-240,50,1	N/A
Outdoor	Outdoor Unit	27.5	31.1	12000	N/A	380-415-3-50	N/A

RTC: Required total cooling capacity
RTH: Required total heating capacity

4.2 Pipe and Refrigerant Distributors

IU quantity	**7/16**
Combination Ratio	98.21%
Additional Refrigerant	1.809kg
Total pipe length	34.5m/1000m
Furthest Actual	9m/175m
Furthest equivalent	9.5m/200m
Drop height between IU and IU	0m/30m
Drop height between IU and OU	0m/70m
Available Capacity Cooling	27.5 kW
Available Capacity Heating	19.9 kW
1 branch	0.5m Copper pipe.

Pipe

No	**Length**	**Gas Pipe**	**Liquid Pipe**
(1)	3.0m	Φ22.2,Φ19.1	Φ12.7
(2)	3.0m	Φ15.9	Φ9.53
(3)	3.0m	Φ15.9	Φ9.53
(4)	3.0m	Φ15.9	Φ9.53
(5)	3.0m	Φ12.7	Φ6.35
(6)	3.0m	Φ15.9	Φ9.53
(7)	3.0m	Φ12.7	Φ6.35
(8)	3.0m	Φ12.7	Φ6.35
(9)	3.0m	Φ15.9	Φ9.53
(10)	3.0m	Φ12.7	Φ6.35
(11)	3.0m	Φ12.7	Φ6.35

4.3 Drawing

TVR 50Hz R410A

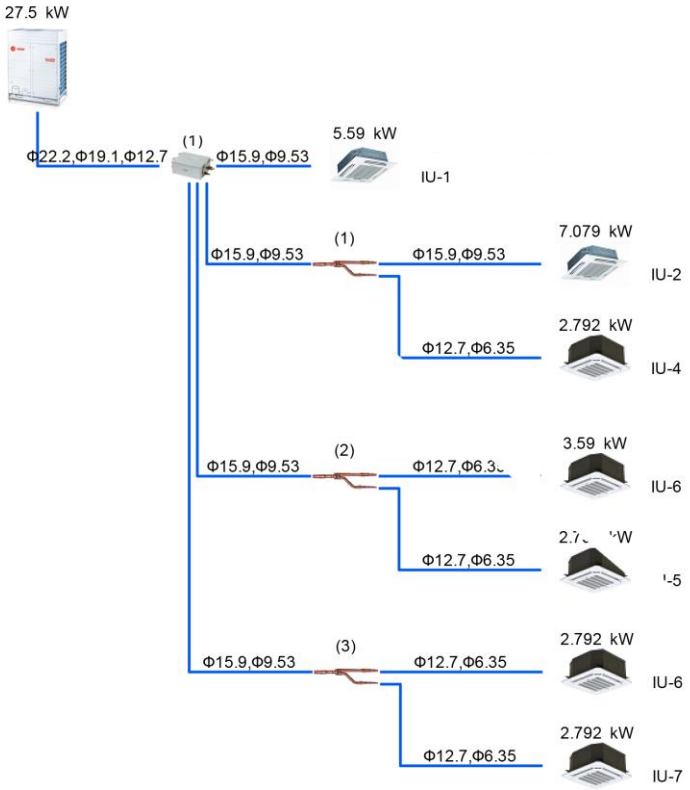

The piping size may be different with the actual situation because of the software's illustration limitation, please confirm the piping size according to the installation manual before installation.

5. FF Zone 4 (WHO)

5.1 Specifications

Room	Description	RTC kW	RTH kW	Air Flow m^3/h	Static Pressure Pa	Power Supply	Rated Load Amperes
IU-1	Indoor Unit	2.8	3.2	522	0	220-240,50,1	N/A
IU-2	Indoor Unit	2.8	3.2	522	0	220-240,50,1	N/A
IU-3	Indoor Unit	3.6	4	610	0	220-240,50,1	N/A
IU-4	Indoor Unit	4.5	5	610	0	220-240,50,1	N/A
IU-5	Indoor Unit	4.5	5	610	0	220-240,50,1	N/A
IU-6	Indoor Unit	2.2	2.4	522	0	220-240,50,1	N/A
IU-7	Indoor Unit	4.5	5	610	0	220-240,50,1	N/A
Outdoor	Outdoor Unit	24.9	27.8	12000	N/A	380-415-3-50	N/A

RTC: Required total cooling capacity
RTH: Required total heating capacity

5.2 Pipe and Refrigerant Distributors

IU quantity	**7/13**
Combination Ratio	98.81%
Additional Refrigerant	1.512kg
Total pipe length	34.5m/1000m
Furthest Actual	15m/175m
Furthest equivalent	16.5m/200m
Drop height between IU and IU	0m/30m
Drop height between IU and OU	0m/70m
Available Capacity Cooling	24.9 kW
Available Capacity Heating	16.9 kW
1 branch	0.5m Copper pipe.

Pipe

No	**Length**	**Gas Pipe**	**Liquid Pipe**
(1)	3.0m	Φ22.2,Φ19.1	Φ12.7
(2)	3.0m	Φ15.9	Φ9.53
(3)	3.0m	Φ15.9	Φ9.53
(4)	3.0m	Φ15.9	Φ9.53
(5)	3.0m	Φ12.7	Φ6.35
(6)	3.0m	Φ12.7	Φ6.35
(7)	3.0m	Φ12.7	Φ6.35
(8)	3.0m	Φ12.7	Φ6.35
(9)	3.0m	Φ12.7	Φ6.35
(10)	3.0m	Φ12.7	Φ6.35
(11)	3.0m	Φ12.7	Φ6.35

5.3 Drawing

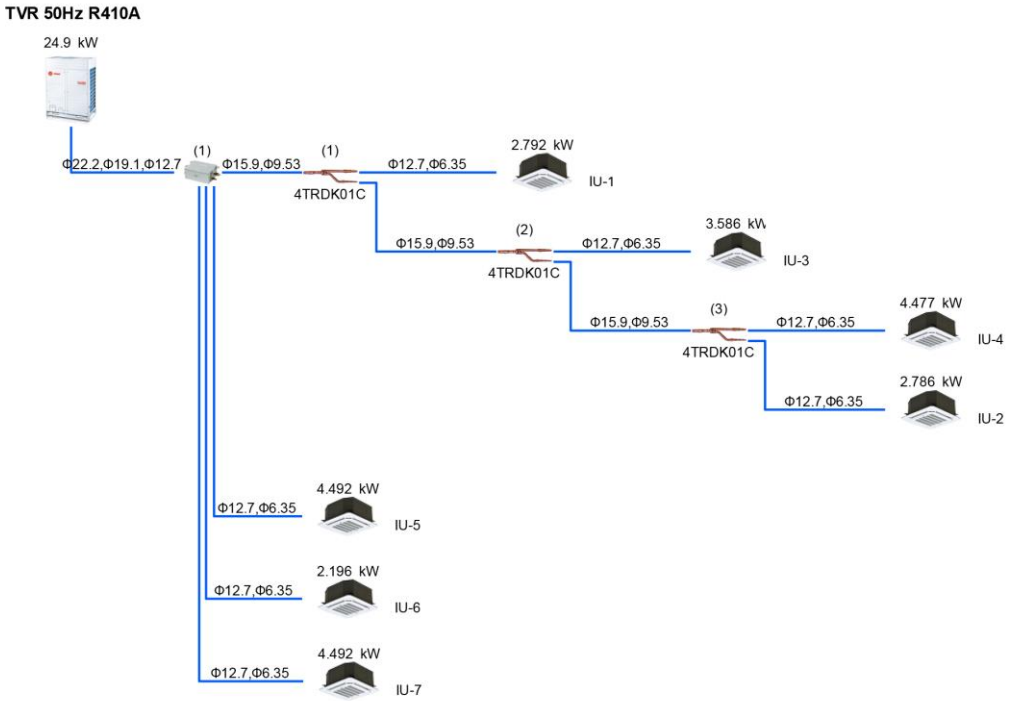

The piping size may be different with the actual situation because of the software's illustration limitation, please confirm the piping size according to the installation manual before installation.

6. GF Zone 1(IT and Banking Hall)

6.1 Specifications

Room	Description	RTC kW	RTH kW	Air Flow m^3/h	Static Pressure Pa	Power Supply	Rated Load Amperes
IU-1	Indoor Unit	5.6	6.3	864	0	220-240,50,1	N/A
IU-2	Indoor Unit	5.6	6.3	864	0	220-240,50,1	N/A
IU-3	Indoor Unit	7.1	8	1157	0	220-240,50,1	N/A
IU-4	Indoor Unit	7.1	8	1157	0	220-240,50,1	N/A
IU-5	Indoor Unit	2.2	2.4	522	0	220-240,50,1	N/A
IU-6	Indoor Unit	2.2	2.4	522	0	220-240,50,1	N/A
Outdoor	Outdoor Unit	29.8	33.4	12000	N/A	380-415-3-50	N/A

RTC: Required total cooling capacity
RTH: Required total heating capacity

6.2 Pipe and Refrigerant Distributors

IU quantity	**6/16**
Combination Ratio	106.43%
Additional Refrigerant	1.782kg
Total pipe length	28m/1000m
Furthest Actual	9m/175m
Furthest equivalent	9.5m/200m
Drop height between IU and IU	0m/30m
Drop height between IU and OU	0m/70m
Available Capacity Cooling	29.1 kW
Available Capacity Heating	19.4 kW
1 branch	0.5m Copper pipe.

Pipe

No	**Length**	**Gas Pipe**	**Liquid Pipe**
(1)	3.0m	Φ22.2,Φ19.1	Φ12.7
(2)	3.0m	Φ15.9	Φ9.53
(3)	3.0m	Φ15.9	Φ9.53
(4)	3.0m	Φ15.9	Φ9.53
(5)	3.0m	Φ15.9	Φ9.53
(6)	3.0m	Φ15.9	Φ9.53
(7)	3.0m	Φ15.9	Φ9.53
(8)	3.0m	Φ12.7	Φ6.35
(9)	3.0m	Φ12.7	Φ6.35

6.3 Drawing

TVR 50Hz R410A

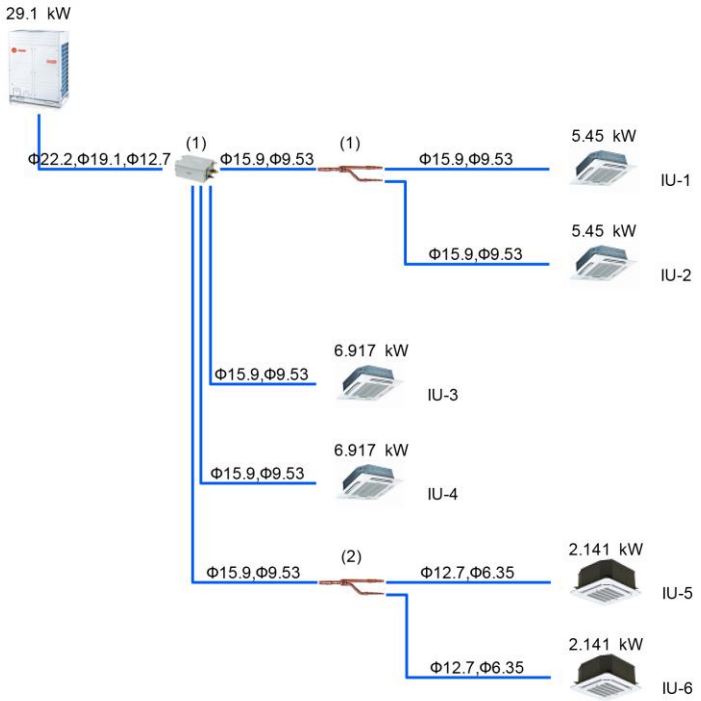

The piping size may be different with the actual situation because of the software's illustration limitation, please confirm the piping size according to the installation manual before installation.

7. GF Zone 2 (Conference Hall and Cafeteria)

7.1 Specifications

Room	Description	RTC kW	RTH kW	Air Flow m^3/h	Static Pressure Pa	Power Supply	Rated Load Amperes
IU-1	Indoor Unit	7.1	8	1157	0	220-240,50,1	N/A
IU-2	Indoor Unit	7.1	8	1157	0	220-240,50,1	N/A
IU-3	Indoor Unit	2.8	3.2	522	0	220-240,50,1	N/A
IU-4	Indoor Unit	2.8	3.2	522	0	220-240,50,1	N/A
IU-5	Indoor Unit	2.8	3.2	522	0	220-240,50,1	N/A
IU-6	Indoor Unit	2.8	3.2	522	0	220-240,50,1	N/A
IU-7	Indoor Unit	2.2	2.4	522	0	220-240,50,1	N/A
Outdoor	Outdoor Unit	27.6	31.2	12000	N/A	380-415-3-50	N/A

RTC: Required total cooling capacity
RTH: Required total heating capacity

7.2 Pipe and Refrigerant Distributors

IU quantity	**7/16**
Combination Ratio	98.57%
Additional Refrigerant	1.809kg
Total pipe length	34.5m/1000m
Furthest Actual	12m/175m
Furthest equivalent	13m/200m
Drop height between IU and IU	0m/30m
Drop height between IU and OU	0m/70m
Available Capacity Cooling	27.6 kW
Available Capacity Heating	19.8 kW
1 branch	0.5m Copper pipe.

Pipe

No	**Length**	**Gas Pipe**	**Liquid Pipe**
(1)	3.0m	Φ22.2,Φ19.1	Φ12.7
(2)	3.0m	Φ15.9	Φ9.53
(3)	3.0m	Φ15.9	Φ9.53
(4)	3.0m	Φ15.9	Φ9.53
(5)	3.0m	Φ12.7	Φ6.35
(6)	3.0m	Φ12.7	Φ6.35
(7)	3.0m	Φ15.9	Φ9.53
(8)	3.0m	Φ15.9	Φ9.53
(9)	3.0m	Φ12.7	Φ6.35
(10)	3.0m	Φ12.7	Φ6.35
(11)	3.0m	Φ12.7	Φ6.35

7.3 Drawing

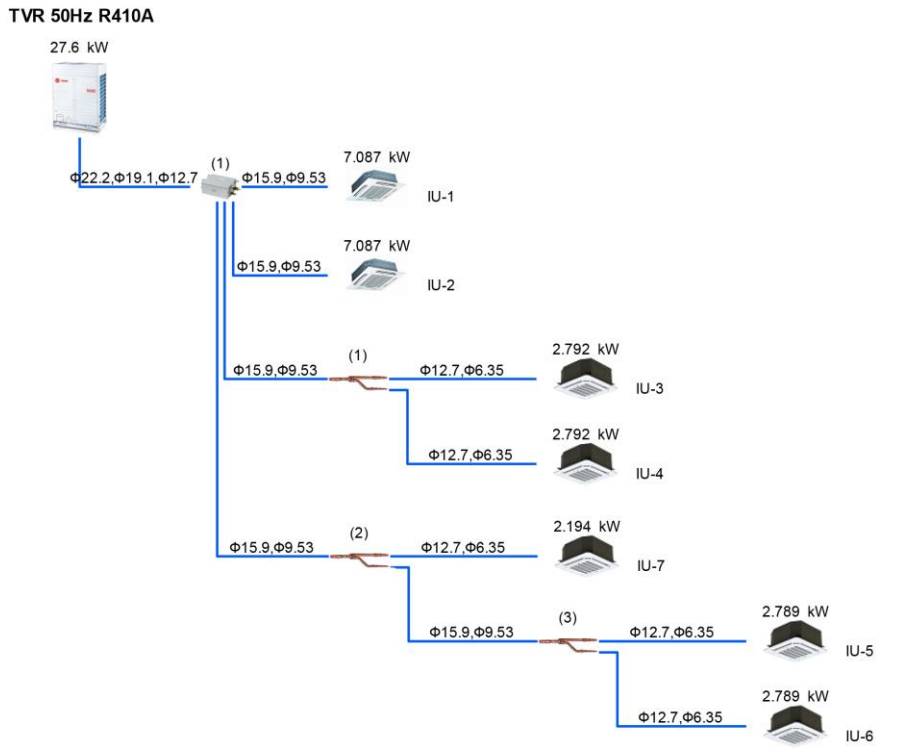

The piping size may be different with the actual situation because of the software's illustration limitation, please confirm the piping size according to the installation manual before installation.

8. GF Zone 4 (World Bank)

8.1 Specifications

Room	Description	RTC kW	RTH kW	Air Flow m^3/h	Static Pressure Pa	Power Supply	Rated Load Amperes
IU-1	Indoor Unit	2.8	3.2	522	0	220-240,50,1	N/A
IU-2	Indoor Unit	2.8	3.2	522	0	220-240,50,1	N/A
IU-3	Indoor Unit	2.8	3.2	522	0	220-240,50,1	N/A
IU-4	Indoor Unit	2.2	2.4	522	0	220-240,50,1	N/A
IU-5	Indoor Unit	2.2	2.4	522	0	220-240,50,1	N/A
IU-6	Indoor Unit	3.6	4	610	0	220-240,50,1	N/A
Outdoor	Outdoor Unit	16.4	18.4	12000	N/A	380-415-3-50	N/A

RTC: Required total cooling capacity
RTH: Required total heating capacity

8.2 Pipe and Refrigerant Distributors

IU quantity	**6/13**
Combination Ratio	65.08%
Additional Refrigerant	1.440kg
Total pipe length	35m/1000m
Furthest Actual	12m/175m
Furthest equivalent	13m/200m
Drop height between IU and IU	0m/30m
Drop height between IU and OU	0m/70m
Available Capacity Cooling	16.4 kW
Available Capacity Heating	24.8 kW
1 branch	0.5m Copper pipe.

Pipe

No	**Length**	**Gas Pipe**	**Liquid Pipe**
(1)	3.0m	Φ19.1,Φ19.1	Φ9.53
(2)	3.0m	Φ15.9	Φ9.53
(3)	3.0m	Φ15.9	Φ9.53
(4)	3.0m	Φ15.9	Φ9.53
(5)	3.0m	Φ15.9	Φ9.53
(6)	3.0m	Φ12.7	Φ6.35
(7)	3.0m	Φ12.7	Φ6.35
(8)	3.0m	Φ12.7	Φ6.35
(9)	3.0m	Φ12.7	Φ6.35
(10)	3.0m	Φ12.7	Φ6.35
(11)	3.0m	Φ12.7	Φ6.35

8.3 Drawing

TVR 50Hz R410A

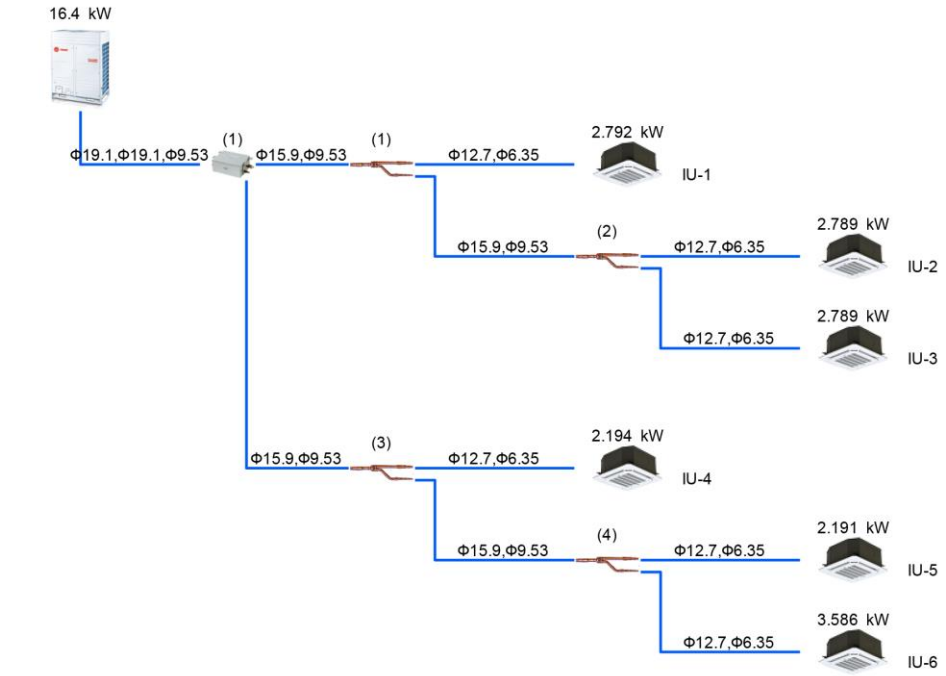

The piping size may be different with the actual situation because of the software's illustration limitation, please confirm the piping size according to the installation manual before installation.

9. GF Zone 3 (UNAIDS)

9.1 Specifications

Room	Description	RTC kW	RTH kW	Air Flow m^3/h	Static Pressure Pa	Power Supply	Rated Load Amperes
IU-1	Indoor Unit	2.8	3.2	522	0	220-240,50,1	N/A
IU-2	Indoor Unit	5.6	6.3	864	0	220-240,50,1	N/A
IU-3	Indoor Unit	5.6	6.3	864	0	220-240,50,1	N/A
IU-4	Indoor Unit	3.6	4	610	0	220-240,50,1	N/A
IU-5	Indoor Unit	2.2	2.4	522	0	220-240,50,1	N/A
IU-6	Indoor Unit	2.2	2.4	522	0	220-240,50,1	N/A
Outdoor	Outdoor Unit	22	24.6	12000	N/A	380-415-3-50	N/A

RTC: Required total cooling capacity
RTH: Required total heating capacity

9.2 Pipe and Refrigerant Distributors

IU quantity	**6/13**
Combination Ratio	87.30%
Additional Refrigerant	1.674kg
Total pipe length	35m/1000m
Furthest Actual	12m/175m
Furthest equivalent	13m/200m
Drop height between IU and IU	0m/30m
Drop height between IU and OU	0m/70m
Available Capacity Cooling	22 kW
Available Capacity Heating	19.4 kW
1 branch	0.5m Copper pipe.

Pipe

No	**Length**	**Gas Pipe**	**Liquid Pipe**
(1)	3.0m	Φ22.2,Φ19.1	Φ9.53
(2)	3.0m	Φ15.9	Φ9.53
(3)	3.0m	Φ15.9	Φ9.53
(4)	3.0m	Φ15.9	Φ9.53
(5)	3.0m	Φ15.9	Φ9.53
(6)	3.0m	Φ12.7	Φ6.35
(7)	3.0m	Φ15.9	Φ9.53
(8)	3.0m	Φ15.9	Φ9.53
(9)	3.0m	Φ12.7	Φ6.35
(10)	3.0m	Φ12.7	Φ6.35
(11)	3.0m	Φ12.7	Φ6.35

9.3 Drawing

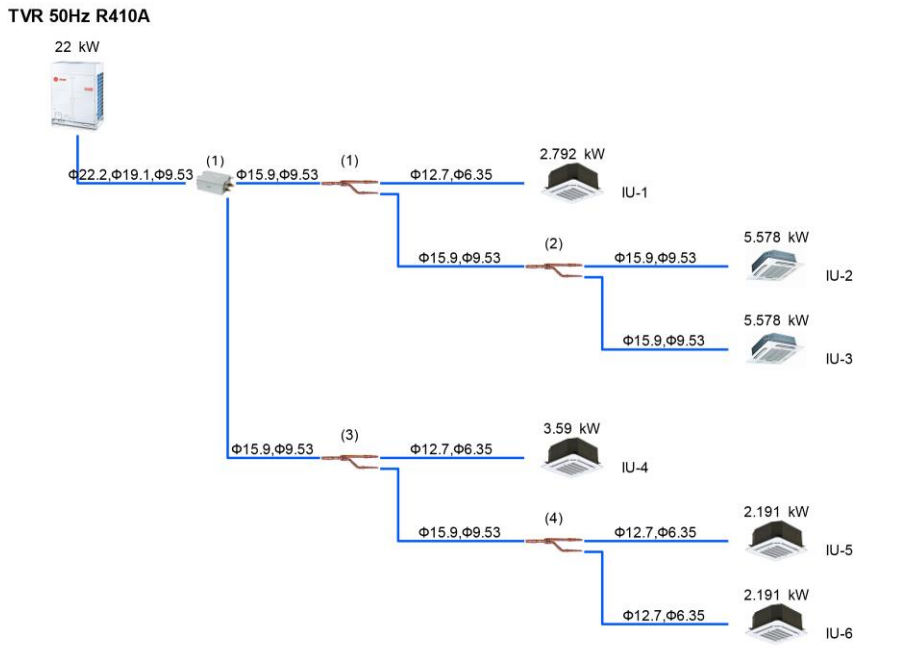

The piping size may be different with the actual situation because of the software's illustration limitation, please confirm the piping size according to the installation manual before installation.

10. SF Zone 1 (UNICEF)

10.1 Specifications

Room	Description	RTC kW	RTH kW	Air Flow m^3/h	Static Pressure Pa	Power Supply	Rated Load Amperes
IU-1	Indoor Unit	2.8	3.2	522	0	220-240,50,1	N/A
IU-2	Indoor Unit	2.8	3.2	522	0	220-240,50,1	N/A
IU-3	Indoor Unit	2.8	3.2	522	0	220-240,50,1	N/A
IU-4	Indoor Unit	2.2	2.4	522	0	220-240,50,1	N/A
IU-5	Indoor Unit	2.2	2.4	522	0	220-240,50,1	N/A
IU-6	Indoor Unit	7.1	8	1157	0	220-240,50,1	N/A
IU-7	Indoor Unit	7.1	8	1157	0	220-240,50,1	N/A
IU-8	Indoor Unit	4.5	5	610	0	220-240,50,1	N/A
Outdoor	Outdoor Unit	31.5	35.4	12000	N/A	380-415-3-50	N/A

RTC: Required total cooling capacity
RTH: Required total heating capacity

10.2 Pipe and Refrigerant Distributors

IU quantity	**8/16**
Combination Ratio	112.50%
Additional Refrigerant	2.070kg
Total pipe length	41m/1000m
Furthest Actual	12m/175m
Furthest equivalent	13m/200m
Drop height between IU and IU	0m/30m
Drop height between IU and OU	0m/70m
Available Capacity Cooling	29.9 kW
Available Capacity Heating	23.5 kW
1 branch	0.5m Copper pipe.

Pipe

No	**Length**	**Gas Pipe**	**Liquid Pipe**
(1)	3.0m	Φ22.2, Φ19.1	Φ12.7
(2)	3.0m	Φ15.9	Φ9.53
(3)	3.0m	Φ15.9	Φ9.53
(4)	3.0m	Φ15.9	Φ9.53
(5)	3.0m	Φ12.7	Φ6.35
(6)	3.0m	Φ12.7	Φ6.35
(7)	3.0m	Φ12.7	Φ6.35
(8)	3.0m	Φ12.7	Φ6.35
(9)	3.0m	Φ12.7	Φ6.35
(10)	3.0m	Φ15.9	Φ9.53
(11)	3.0m	Φ15.9	Φ9.53
(12)	3.0m	Φ15.9	Φ9.53
(13)	3.0m	Φ12.7	Φ6.35

10.3 Drawing

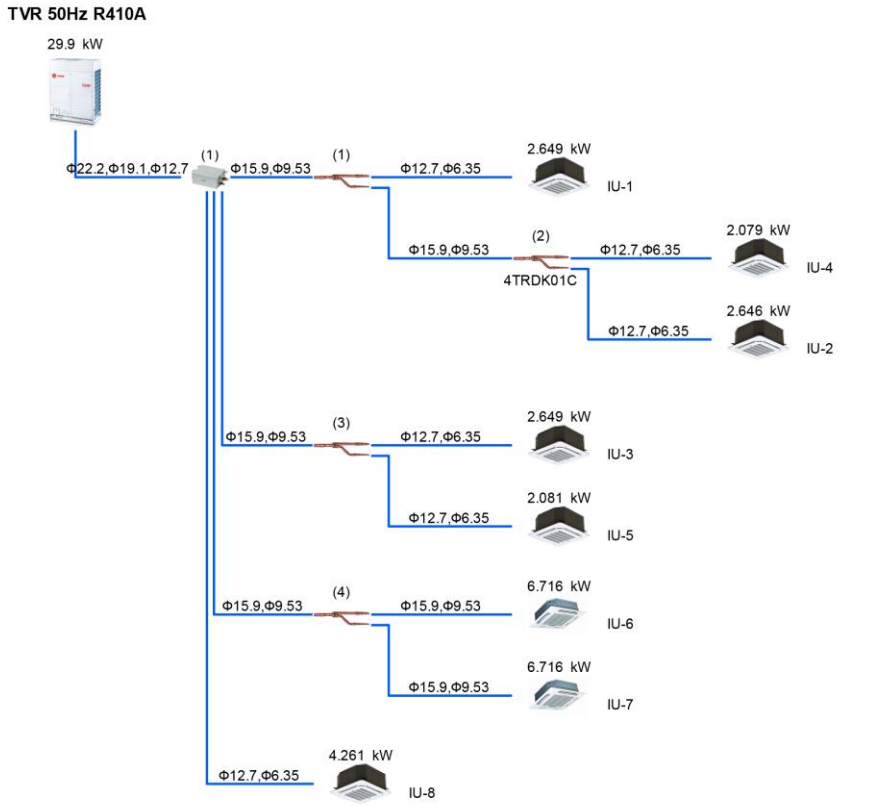

The piping size may be different with the actual situation because of the software's illustration limitation, please confirm the piping size according to the installation manual before installation.

11. SF Zone 2 (UNICEF)

11.1 Specifications

Room	Description	RTC kW	RTH kW	Air Flow m^3/h	Static Pressure Pa	Power Supply	Rated Load Amperes
IU-1	Indoor Unit	3.6	4	610	0	220-240,50,1	N/A
IU-2	Indoor Unit	2.8	3.2	522	0	220-240,50,1	N/A
IU-3	Indoor Unit	5.6	6.3	864	0	220-240,50,1	N/A
IU-4	Indoor Unit	3.6	4	610	0	220-240,50,1	N/A
IU-5	Indoor Unit	3.6	4	610	0	220-240,50,1	N/A
IU-6	Indoor Unit	7.1	8	1157	0	220-240,50,1	N/A
Outdoor	Outdoor Unit	26.3	29.5	12000	N/A	380-415-3-50	N/A

RTC: Required total cooling capacity
RTH: Required total heating capacity

11.2 Pipe and Refrigerant Distributors

IU quantity	**6/16**
Combination Ratio	93.93%
Additional Refrigerant	1.926kg
Total pipe length	35m/1000m
Furthest Actual	12m/175m
Furthest equivalent	13m/200m
Drop height between IU and IU	0m/30m
Drop height between IU and OU	0m/70m
Available Capacity Cooling	26.3 kW
Available Capacity Heating	21.5 kW
1 branch	0.5m Copper pipe.

Pipe

No	**Length**	**Gas Pipe**	**Liquid Pipe**
(1)	3.0m	Φ22.2,Φ19.1	Φ12.7
(2)	3.0m	Φ15.9	Φ9.53
(3)	3.0m	Φ15.9	Φ9.53
(4)	3.0m	Φ15.9	Φ9.53
(5)	3.0m	Φ15.9	Φ9.53
(6)	3.0m	Φ12.7	Φ6.35
(7)	3.0m	Φ12.7	Φ6.35
(8)	3.0m	Φ15.9	Φ9.53
(9)	3.0m	Φ12.7	Φ6.35
(10)	3.0m	Φ12.7	Φ6.35
(11)	3.0m	Φ15.9	Φ9.53

11.3 Drawing

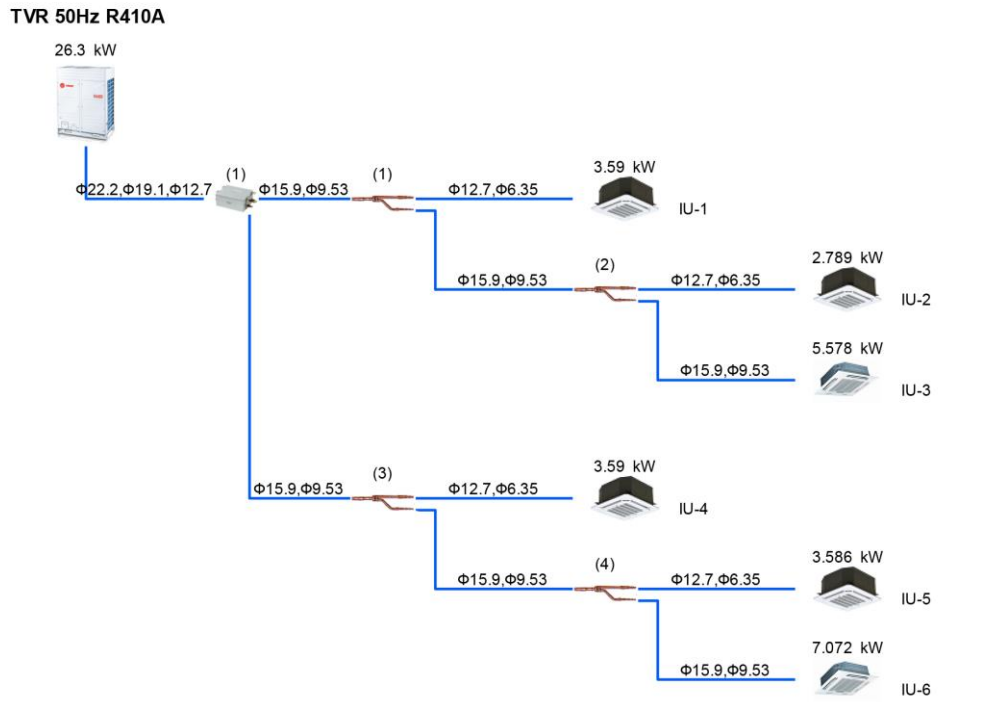

The piping size may be different with the actual situation because of the software's illustration limitation, please confirm the piping size according to the installation manual before installation.

12. SF Zone 3(UNICEF)

12.1 Specifications

Room	Description	RTC kW	RTH kW	Air Flow m^3/h	Static Pressure Pa	Power Supply	Rated Load Amperes
IU-1	Indoor Unit	5.6	6.3	864	0	220-240,50,1	N/A
IU-2	Indoor Unit	2.8	3.2	522	0	220-240,50,1	N/A
IU-3	Indoor Unit	7.1	8	1157	0	220-240,50,1	N/A
IU-4	Indoor Unit	2.8	3.2	522	0	220-240,50,1	N/A
IU-5	Indoor Unit	2.8	3.2	522	0	220-240,50,1	N/A
IU-6	Indoor Unit	3.6	4	610	0	220-240,50,1	N/A
IU-7	Indoor Unit	4.5	5	610	0	220-240,50,1	N/A
Outdoor	Outdoor Unit	29.2	32.9	12000	N/A	380-415-3-50	N/A

RTC: Required total cooling capacity
RTH: Required total heating capacity

12.2 Pipe and Refrigerant Distributors

IU quantity	**7/16**
Combination Ratio	104.29%
Additional Refrigerant	1.809kg
Total pipe length	34.5m/1000m
Furthest Actual	12m/175m
Furthest equivalent	13m/200m
Drop height between IU and IU	0m/30m
Drop height between IU and OU	0m/70m
Available Capacity Cooling	28.7 kW
Available Capacity Heating	19.4 kW
1 branch	0.5m Copper pipes.

Pipe

No	**Length**	**Gas Pipe**	**Liquid Pipe**
(1)	3.0m	Φ22.2,Φ19.1	Φ12.7
(2)	3.0m	Φ15.9	Φ9.53
(3)	3.0m	Φ15.9	Φ9.53
(4)	3.0m	Φ12.7	Φ6.35
(5)	3.0m	Φ15.9	Φ9.53
(6)	3.0m	Φ15.9	Φ9.53
(7)	3.0m	Φ15.9	Φ9.53
(8)	3.0m	Φ12.7	Φ6.35
(9)	3.0m	Φ12.7	Φ6.35
(10)	3.0m	Φ12.7	Φ6.35
(11)	3.0m	Φ12.7	Φ6.35

12.3 Drawing

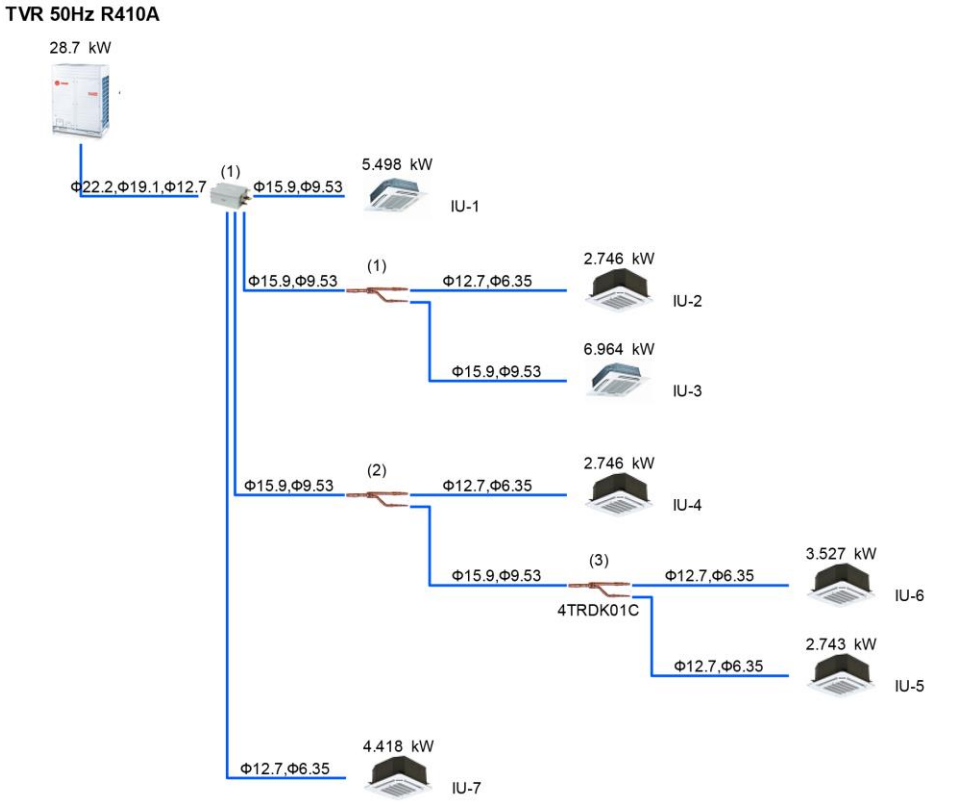

The piping size may be different with the actual situation because of the software's illustration limitation, please confirm the piping size according to the installation manual before installation.

13. SF Zone 4 (UNICEF)

13.1 Specifications

Room	Description	RTC kW	RTH kW	Air Flow m^3/h	Static Pressure Pa	Power Supply	Rated Load Amperes
IU-1	Indoor Unit	3.6	4	610	0	220-240,50,1	N/A
IU-2	Indoor Unit	4.5	5	610	0	220-240,50,1	N/A
IU-3	Indoor Unit	2.8	3.2	522	0	220-240,50,1	N/A
IU-4	Indoor Unit	5.6	6.3	864	0	220-240,50,1	N/A
IU-5	Indoor Unit	5.6	6.3	864	0	220-240,50,1	N/A
IU-6	Indoor Unit	2.2	2.4	522	0	220-240,50,1	N/A
IU-7	Indoor Unit	2.2	2.4	522	0	220-240,50,1	N/A
IU-8	Indoor Unit	2.2	2.4	522	0	220-240,50,1	N/A
IU-9	Indoor Unit	2.2	2.4	522	0	220-240,50,1	N/A
Outdoor	Outdoor Unit	30.9	34.4	12000	N/A	380-415-3-50	N/A

RTC: Required total cooling capacity
RTH: Required total heating capacity

13.2 Pipe and Refrigerant Distributors

IU quantity	**9/16**
Combination Ratio	110.36%
Additional Refrigerant	2.331kg
Total pipe length	47.5m/1000m
Furthest Actual	12m/175m
Furthest equivalent	13m/200m
Drop height between IU and IU	0m/30m
Drop height between IU and OU	0m/70m
Available Capacity Cooling	29.7 kW
Available Capacity Heating	20.1 kW
1 branch	0.5m Copper pipe.

Pipe

No	Length	Gas Pipe	Liquid Pipe
(1)	3.0m	Φ22.2, Φ19.1	Φ12.7
(2)	3.0m	Φ15.9	Φ9.53
(3)	3.0m	Φ15.9	Φ9.53
(4)	3.0m	Φ12.7	Φ6.35
(5)	3.0m	Φ12.7	Φ6.35
(6)	3.0m	Φ12.7	Φ6.35
(7)	3.0m	Φ15.9	Φ9.53
(8)	3.0m	Φ15.9	Φ9.53
(9)	3.0m	Φ15.9	Φ9.53
(10)	3.0m	Φ12.7	Φ6.35
(11)	3.0m	Φ15.9	Φ9.53
(12)	3.0m	Φ15.9	Φ9.53
(13)	3.0m	Φ12.7	Φ6.35
(14)	3.0m	Φ12.7	Φ6.35
(15)	3.0m	Φ12.7	Φ6.35

13.3 Drawing

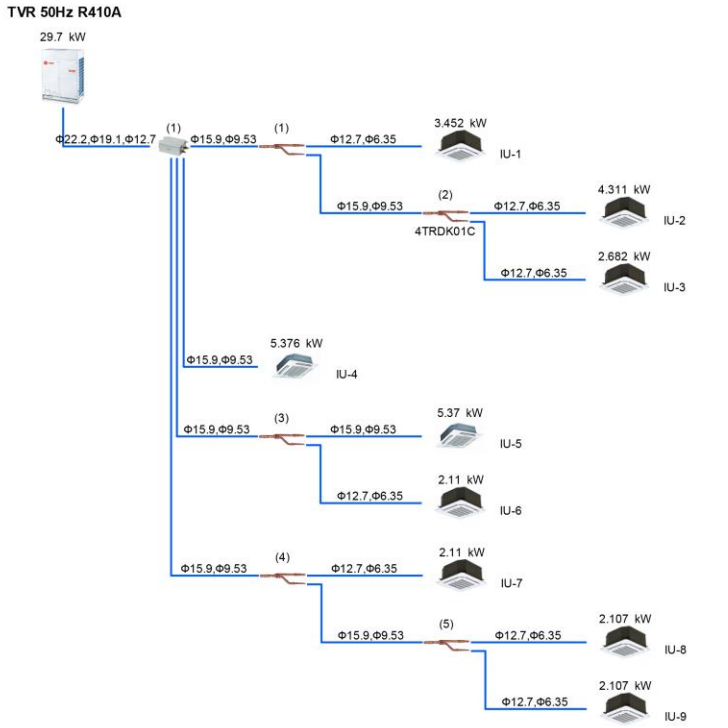

The piping size may be different with the actual situation because of the software's illustration limitation, please confirm the piping size according to the installation manual before installation.

14. TF Zone 1 (UNDP)

14.1 Specifications

Room	Description	RTC kW	RTH kW	Air Flow m^3/h	Static Pressure Pa	Power Supply	Rated Load Amperes
IU-1	Indoor Unit	7.1	8	1157	0	220-240,50,1	N/A
IU-2	Indoor Unit	3.6	4	610	0	220-240,50,1	N/A
IU-3	Indoor Unit	4.5	5	610	0	220-240,50,1	N/A
IU-4	Indoor Unit	2.8	3.2	522	0	220-240,50,1	N/A
IU-5	Indoor Unit	2.8	3.2	522	0	220-240,50,1	N/A
IU-6	Indoor Unit	3.6	4	610	0	220-240,50,1	N/A
IU-7	Indoor Unit	2.8	3.2	522	0	220-240,50,1	N/A
IU-8	Indoor Unit	2.8	3.2	522	0	220-240,50,1	N/A
Outdoor	Outdoor Unit	30	33.8	12000	N/A	380-415-3-50	N/A

RTC: Required total cooling capacity
RTH: Required total heating capacity

14.2 Pipe and Refrigerant Distributors

IU quantity	**8/16**
Combination Ratio	107.14%
Additional Refrigerant	1.953kg
Total pipe length	41m/1000m
Furthest Actual	12m/175m
Furthest equivalent	13m/200m
Drop height between IU and IU	0m/30m
Drop height between IU and OU	0m/70m
Available Capacity Cooling	29.2 kW
Available Capacity Heating	19.5 kW
1 branch	0.5m Copper pipe.

Pipe

No	**Length**	**Gas Pipe**	**Liquid Pipe**
(1)	3.0m	Φ22.2,Φ19.1	Φ12.7
(2)	3.0m	Φ15.9	Φ9.53
(3)	3.0m	Φ15.9	Φ9.53
(4)	3.0m	Φ12.7	Φ6.35
(5)	3.0m	Φ12.7	Φ6.35
(6)	3.0m	Φ15.9	Φ9.53
(7)	3.0m	Φ12.7	Φ6.35
(8)	3.0m	Φ12.7	Φ6.35
(9)	3.0m	Φ15.9	Φ9.53
(10)	3.0m	Φ15.9	Φ9.53
(11)	3.0m	Φ12.7	Φ6.35
(12)	3.0m	Φ12.7	Φ6.35
(13)	3.0m	Φ12.7	Φ6.35

14.3 Drawing

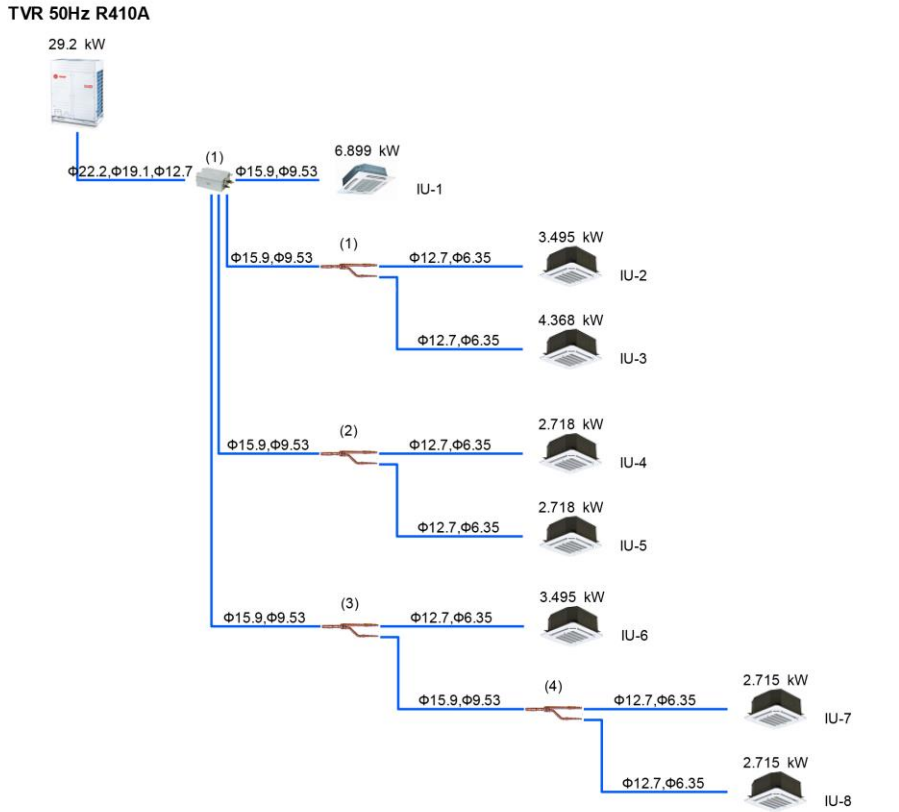

The piping size may be different with the actual situation because of the software's illustration limitation, please confirm the piping size according to the installation manual before installation.

15. TF Zone 2 (UNDP)

15.1 Specifications

Room	Description	RTC kW	RTH kW	Air Flow m^3/h	Static Pressure Pa	Power Supply	Rated Load Amperes
IU-1	Indoor Unit	2.8	3.2	522	0	220-240,50,1	N/A
IU-2	Indoor Unit	2.8	3.2	522	0	220-240,50,1	N/A
IU-3	Indoor Unit	2.8	3.2	522	0	220-240,50,1	N/A
IU-4	Indoor Unit	2.8	3.2	522	0	220-240,50,1	N/A
IU-5	Indoor Unit	2.8	3.2	522	0	220-240,50,1	N/A
IU-6	Indoor Unit	7.1	8	1157	0	220-240,50,1	N/A
Outdoor	Outdoor Unit	21.1	24	12000	N/A	380-415-3-50	N/A

RTC: Required total cooling capacity
RTH: Required total heating capacity

15.2 Pipe and Refrigerant Distributors

IU quantity	**6/13**
Combination Ratio	83.73%
Additional Refrigerant	1.557kg
Total pipe length	35m/1000m
Furthest Actual	15m/175m
Furthest equivalent	16.5m/200m
Drop height between IU and IU	0m/30m
Drop height between IU and OU	0m/70m
Available Capacity Cooling	21.1 kW
Available Capacity Heating	19.2 kW
1 branch	0.5m Copper pipe.

Pipe

No	**Length**	**Gas Pipe**	**Liquid Pipe**
(1)	3.0m	Φ22.2,Φ19.1	Φ9.53
(2)	3.0m	Φ15.9	Φ9.53
(3)	3.0m	Φ15.9	Φ9.53
(4)	3.0m	Φ15.9	Φ9.53
(5)	3.0m	Φ12.7	Φ6.35
(6)	3.0m	Φ12.7	Φ6.35
(7)	3.0m	Φ12.7	Φ6.35
(8)	3.0m	Φ12.7	Φ6.35
(9)	3.0m	Φ15.9	Φ9.53
(10)	3.0m	Φ12.7	Φ6.35
(11)	3.0m	Φ15.9	Φ9.53

15.3 Drawing

TVR 50Hz R410A

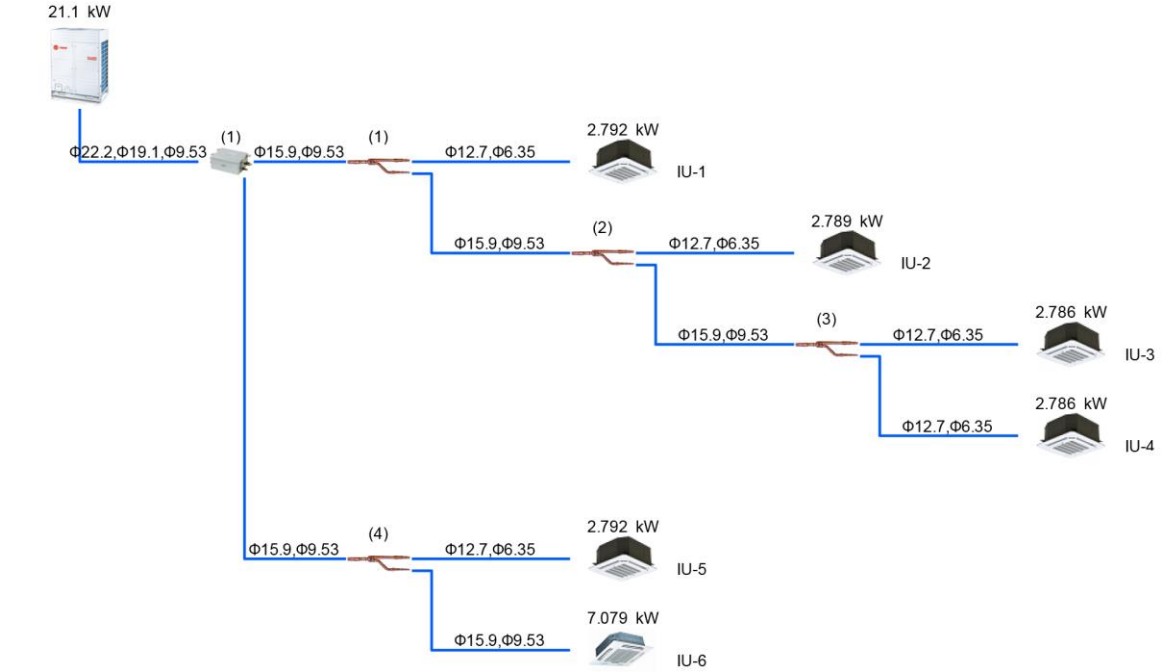

The piping size may be different with the actual situation because of the software's illustration limitation, please confirm the piping size according to the installation manual before installation.

16. TF Zone 3 (UNDP)

16.1 Specifications

Room	Description	RTC kW	RTH kW	Air Flow m^3/h	Static Pressure Pa	Power Supply	Rated Load Amperes
IU-1	Indoor Unit	3.6	4	610	0	220-240,50,1	N/A
IU-2	Indoor Unit	4.5	5	610	0	220-240,50,1	N/A
IU-3	Indoor Unit	3.6	4	610	0	220-240,50,1	N/A
IU-4	Indoor Unit	2.8	3.2	522	0	220-240,50,1	N/A
IU-5	Indoor Unit	2.2	2.4	522	0	220-240,50,1	N/A
IU-6	Indoor Unit	3.6	4	610	0	220-240,50,1	N/A
Outdoor	Outdoor Unit	20.3	22.6	12000	N/A	380-415-3-50	N/A

RTC: Required total cooling capacity
RTH: Required total heating capacity

16.2 Pipe and Refrigerant Distributors

IU quantity	**6/13**
Combination Ratio	80.56%
Additional Refrigerant	1.440kg
Total pipe length	35m/1000m
Furthest Actual	15m/175m
Furthest equivalent	16.5m/200m
Drop height between IU and IU	0m/30m
Drop height between IU and OU	0m/70m
Available Capacity Cooling	20.3 kW
Available Capacity Heating	18.9 kW
1 branch	0.5m Copper pipe.

Pipe

No	**Length**	**Gas Pipe**	**Liquid Pipe**
(1)	3.0m	Φ22.2,Φ19.1	Φ9.53
(2)	3.0m	Φ15.9	Φ9.53
(3)	3.0m	Φ15.9	Φ9.53
(4)	3.0m	Φ15.9	Φ9.53
(5)	3.0m	Φ12.7	Φ6.35
(6)	3.0m	Φ12.7	Φ6.35
(7)	3.0m	Φ15.9	Φ9.53
(8)	3.0m	Φ12.7	Φ6.35
(9)	3.0m	Φ12.7	Φ6.35
(10)	3.0m	Φ12.7	Φ6.35
(11)	3.0m	Φ12.7	Φ6.35

16.3 Drawing

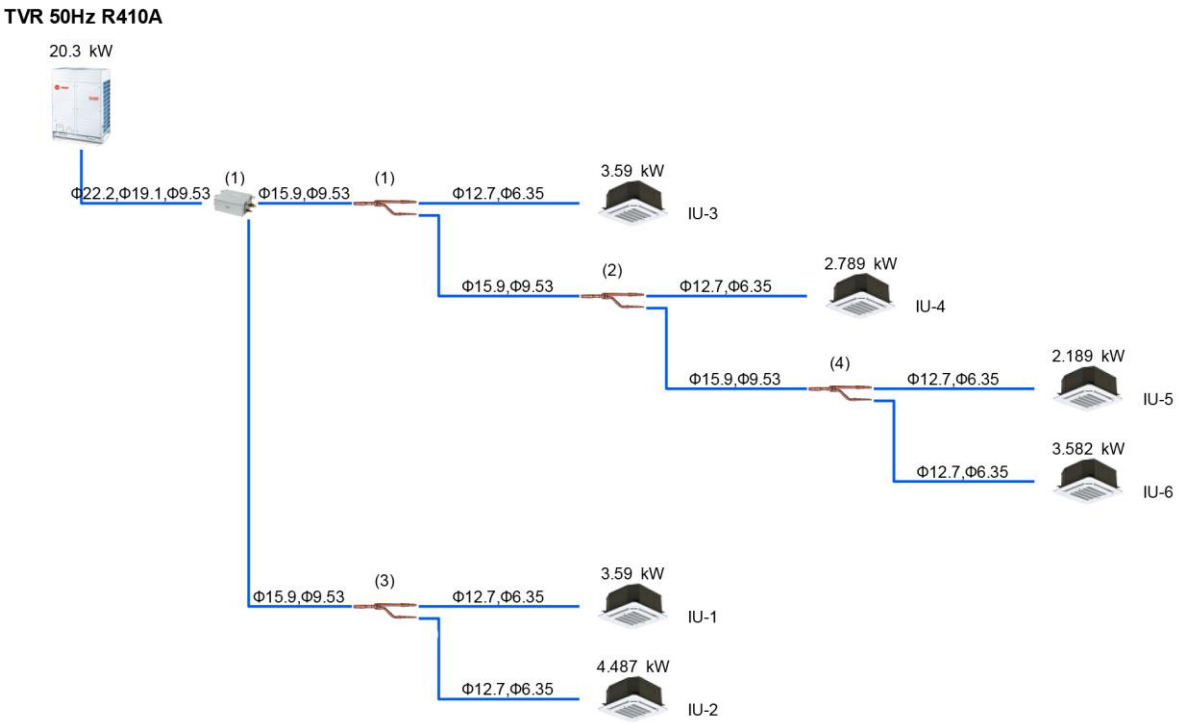

The piping size may be different with the actual situation because of the software's illustration limitation, please confirm the piping size according to the installation manual before installation.

17. TF Zone 4 (UNDP)

17.1 Specifications

Room	Description	RTC kW	RTH kW	Air Flow m^3/h	Static Pressure Pa	Power Supply	Rated Load Amperes
IU-1	Indoor Unit	7.1	8	1157	0	220-240,50,1	N/A
IU-2	Indoor Unit	5.6	6.3	864	0	220-240,50,1	N/A
IU-3	Indoor Unit	4.5	5	610	0	220-240,50,1	N/A
IU-4	Indoor Unit	2.8	3.2	522	0	220-240,50,1	N/A
IU-5	Indoor Unit	2.8	3.2	522	0	220-240,50,1	N/A
IU-6	Indoor Unit	2.8	3.2	522	0	220-240,50,1	N/A
Outdoor	Outdoor Unit	25.6	28.9	12000	N/A	380-415-3-50	N/A

RTC: Required total cooling capacity
RTH: Required total heating capacity

17.2 Pipe and Refrigerant Distributors

IU quantity	**6/13**
Combination Ratio	101.59%
Additional Refrigerant	1.485kg
Total pipe length	28m/1000m
Furthest Actual	12m/175m
Furthest equivalent	13m/200m
Drop height between IU and IU	0m/30m
Drop height between IU and OU	0m/70m
Available Capacity Cooling	25.4 kW
Available Capacity Heating	16.6 kW
1 branch	0.5m Copper pipe.

Pipe

No	**Length**	**Gas Pipe**	**Liquid Pipe**
(1)	3.0m	Φ22.2,Φ19.1	Φ12.7
(2)	3.0m	Φ15.9	Φ9.53
(3)	3.0m	Φ15.9	Φ9.53
(4)	3.0m	Φ12.7	Φ6.35
(5)	3.0m	Φ15.9	Φ9.53
(6)	3.0m	Φ15.9	Φ9.53
(7)	3.0m	Φ12.7	Φ6.35
(8)	3.0m	Φ12.7	Φ6.35
(9)	3.0m	Φ12.7	Φ6.35

17.3 Drawing

TVR 50Hz R410A

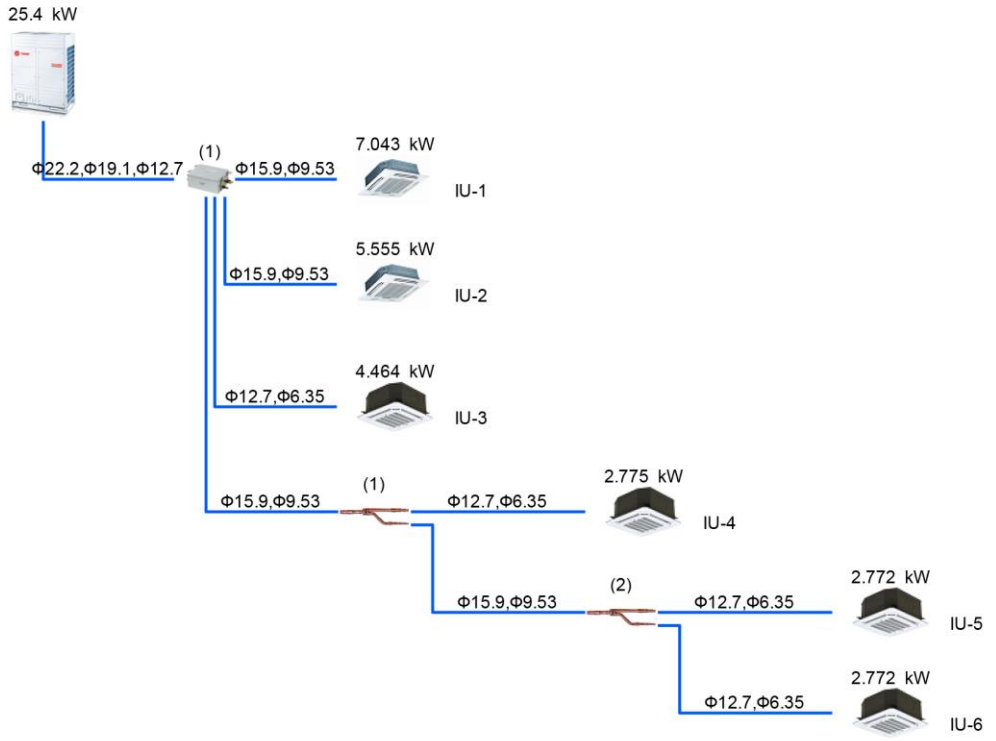

The piping size may be different with the actual situation because of the software's illustration limitation, please confirm the piping size according to the installation manual before installation.

18. TF Zone 5 (UNDP)

18.1 Specifications

Room	Description	RTC kW	RTH kW	Air Flow m^3/h	Static Pressure Pa	Power Supply	Rated Load Amperes
IU-1	Indoor Unit	9	10	1540	0	220-240,50,1	N/A
IU-2	Indoor Unit	7.1	8	1157	0	220-240,50,1	N/A
IU-3	Indoor Unit	7.1	8	1157	0	220-240,50,1	N/A
IU-4	Indoor Unit	2.8	3.2	522	0	220-240,50,1	N/A
IU-5	Indoor Unit	2.8	3.2	522	0	220-240,50,1	N/A
Outdoor	Outdoor Unit	28.8	32.4	12000	N/A	380-415-3-50	N/A

RTC: Required total cooling capacity
RTH: Required total heating capacity

18.2 Pipe and Refrigerant Distributors

IU quantity	**5/16**
Combination Ratio	102.86%
Additional Refrigerant	1.404kg
Total pipe length	21.5m/1000m
Furthest Actual	9m/175m
Furthest equivalent	9.5m/200m
Drop height between IU and IU	0m/30m
Drop height between IU and OU	0m/70m
Available Capacity Cooling	28.5 kW
Available Capacity Heating	19.3 kW
1 branch	0.5m Copper pipe.

Pipe

No	**Length**	**Gas Pipe**	**Liquid Pipe**
(1)	3.0m	Φ22.2, Φ19.1	Φ12.7
(2)	3.0m	Φ15.9	Φ9.53
(3)	3.0m	Φ15.9	Φ9.53
(4)	3.0m	Φ15.9	Φ9.53
(5)	3.0m	Φ15.9	Φ9.53
(6)	3.0m	Φ12.7	Φ6.35
(7)	3.0m	Φ12.7	Φ6.35

18.3 Drawing

TVR 50Hz R410A

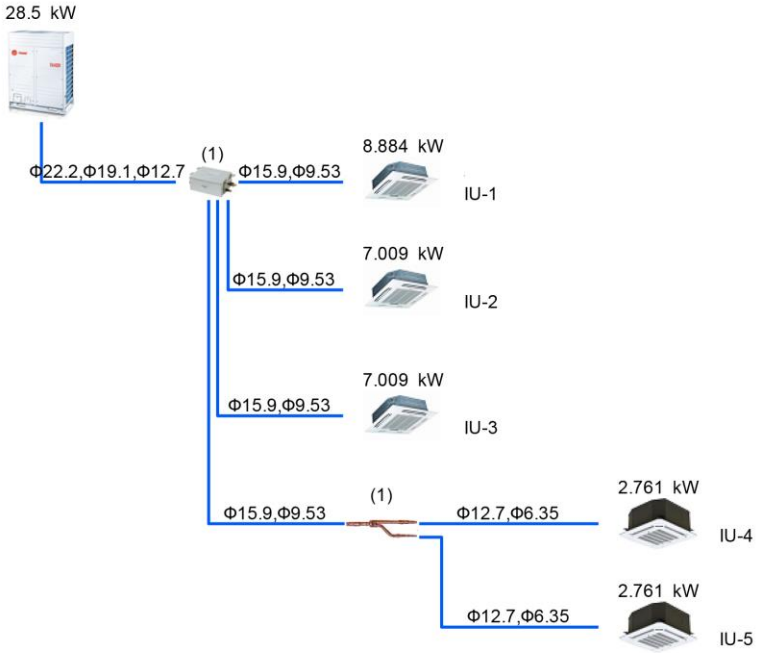

The piping size may be different with the actual situation because of the software's illustration limitation, please confirm the piping size according to the installation manual before installation.

19. TF Zone 6 (UNDP)

19.1 Specifications

Room	Description	RTC kW	RTH kW	Air Flow m^3/h	Static Pressure Pa	Power Supply	Rated Load Amperes
IU-1	Indoor Unit	3.6	4	610	0	220-240,50,1	N/A
IU-2	Indoor Unit	4.5	5	610	0	220-240,50,1	N/A
IU-3	Indoor Unit	7.1	8	1157	0	220-240,50,1	N/A
IU-4	Indoor Unit	3.6	4	610	0	220-240,50,1	N/A
IU-5	Indoor Unit	3.6	4	610	0	220-240,50,1	N/A
IU-6	Indoor Unit	3.6	4	610	0	220-240,50,1	N/A
Outdoor	Outdoor Unit	26	29	12000	N/A	380-415-3-50	N/A

RTC: Required total cooling capacity
RTH: Required total heating capacity

19.2 Pipe and Refrigerant Distributors

IU quantity	**6/13**
Combination Ratio	103.17%
Additional Refrigerant	1.746kg
Total pipe length	35m/1000m
Furthest Actual	12m/175m
Furthest equivalent	13m/200m
Drop height between IU and IU	0m/30m
Drop height between IU and OU	0m/70m
Available Capacity Cooling	25.7 kW
Available Capacity Heating	16.6 kW
1 branch	0.5m Copper pipe.

Pipe

No	**Length**	**Gas Pipe**	**Liquid Pipe**
(1)	3.0m	Φ22.2, Φ19.1	Φ12.7
(2)	3.0m	Φ15.9	Φ9.53
(3)	3.0m	Φ15.9	Φ9.53
(4)	3.0m	Φ15.9	Φ9.53
(5)	3.0m	Φ15.9	Φ9.53
(6)	3.0m	Φ12.7	Φ6.35
(7)	3.0m	Φ12.7	Φ6.35
(8)	3.0m	Φ15.9	Φ9.53
(9)	3.0m	Φ12.7	Φ6.35
(10)	3.0m	Φ12.7	Φ6.35
(11)	3.0m	Φ12.7	Φ6.35

19.3 Drawing

TVR 50Hz R410A

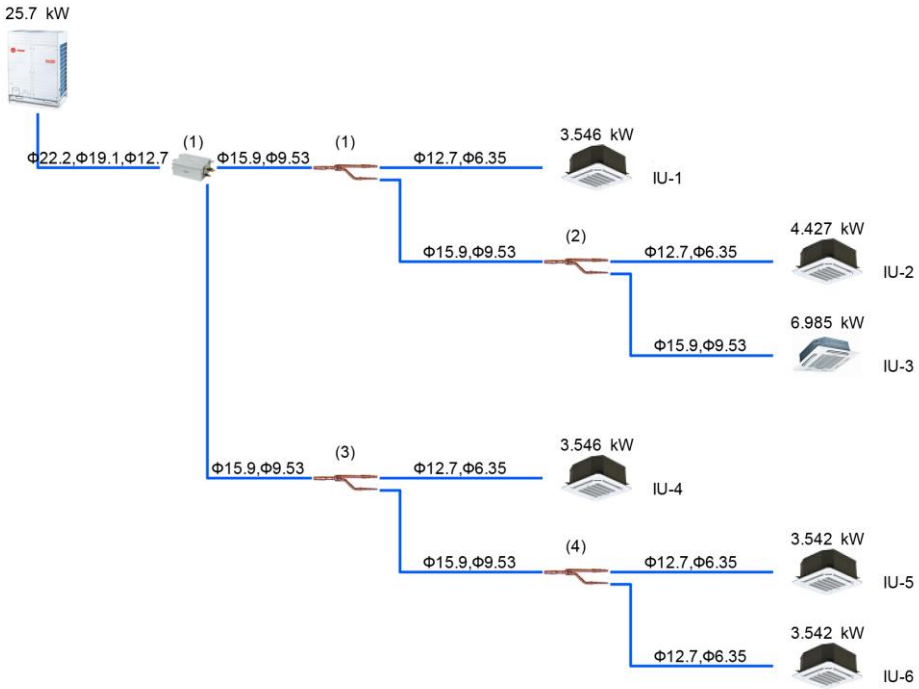

The piping size may be different with the actual situation because of the software's illustration limitation, please confirm the piping size according to the installation manual before installation.