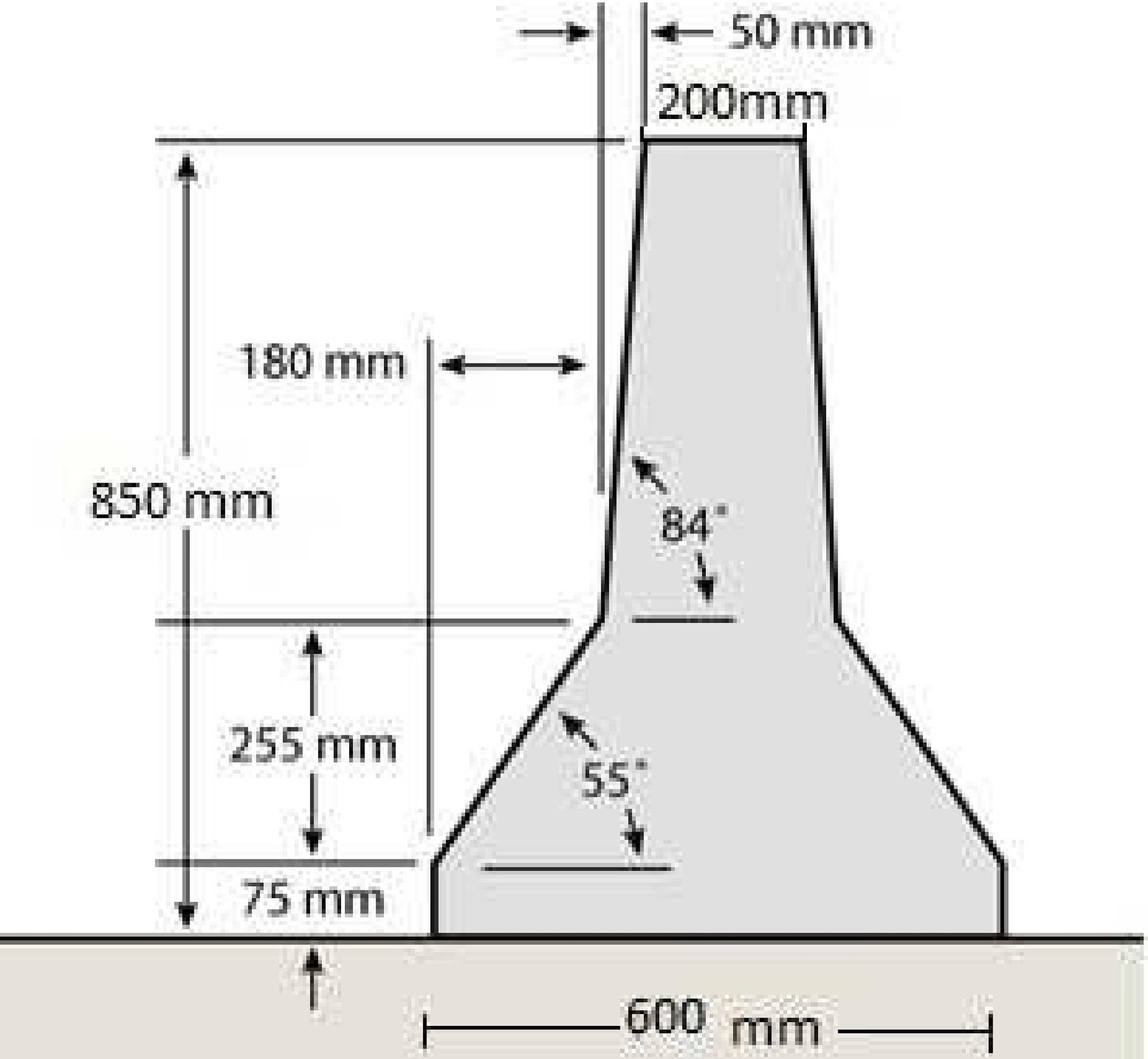
50 mm
200mm
180 mm
850 mm
84°
255 mm
55°
75 mm
600 mm