WATER TANK AT VISIT CENTER

No.	Description	Drawing No.
01	GENERAL LAYOUT	L-01
02	ELVATION VIEW	A
03	PLAN	01
04	FOOTING & COLUMN PLAN	02
05	ELEVATION	03
06	SECTION A_A	04
07	COLUMN & BEAM PLAN	05
08	R.C FOOTING DETAIL	06
09	R.C COLUMN DETAIL	07
10	R.C GROUND BEAM DETAIL	08
11	R.C FIRST BEAM DETAIL	09
12	R.C TOP BEAM DETAIL	10
13	R.C SLAB DETAIL	11

No.	Description	Drawing No.

No.	Description	Drawing No.

MINISTRY OF AGRICULTURE AND FORESTRY (MAF)

Sustainable Forest and Land Management in the Dry Dipterocarp Forest Ecosystems of Southern Lao PDR

DEPARTMENT
OF
FOREST RESOURCES MANAGEMENT (DFRM)

REV. No.	DESCRIPTION	DATE		NAME	SIGNATURE	DATE	DRAWING TITLE	DRAWING NO.
			DESIGNED BY:				WATER TANK AT VISIT CENTER CONTENT	–
			CHECKED BY:					SCALE
			APPROVED BY:					-

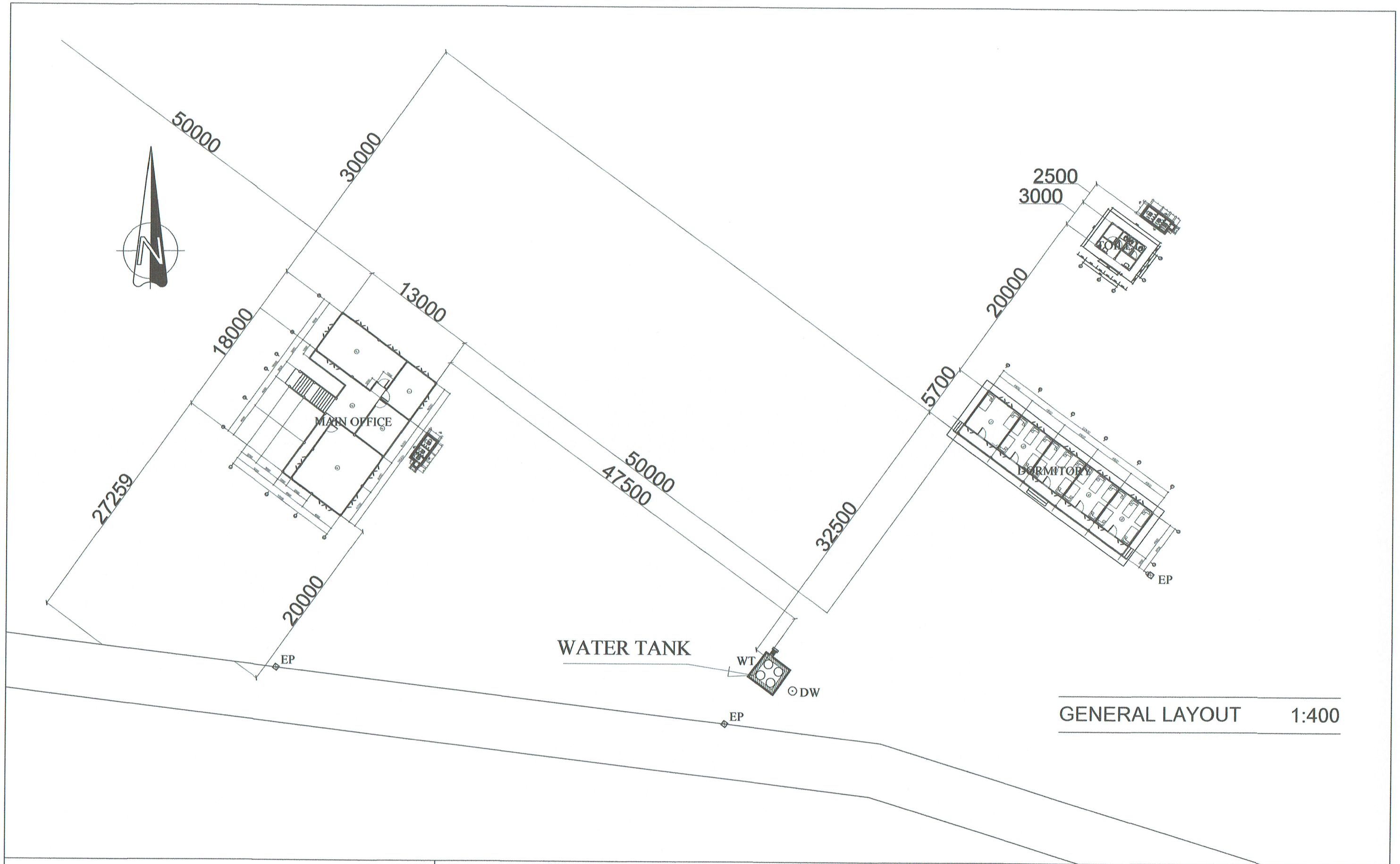

MINISTRY OF AGRICULTURE AND FORESTRY (MAF)	Sustainable Forest and Land Management in the Dry Dipterocarp Forest Ecosystems of Southern Lao PDR								
DEPARTMENT OF FOREST RESOURCES MANAGEMENT (DFRM)	REV. No.	DESCRIPTION	DATE		NAME	SIGNATURE	DATE	DRAWING TITLE	DRAWING NO. L–01
				DESIGNED BY:				WATER TANK AT VISIT CENTER **GENERAL LAYOUT**	SCALE -
				CHECKED BY:					
				APPROVED BY:					

ໂຄງການ ອະນຸລັກລະບົບນິເວດປ່າໂຄກ

Sustainable Forest and Land Management in the Dry Dipterocarp Forest Ecosystems

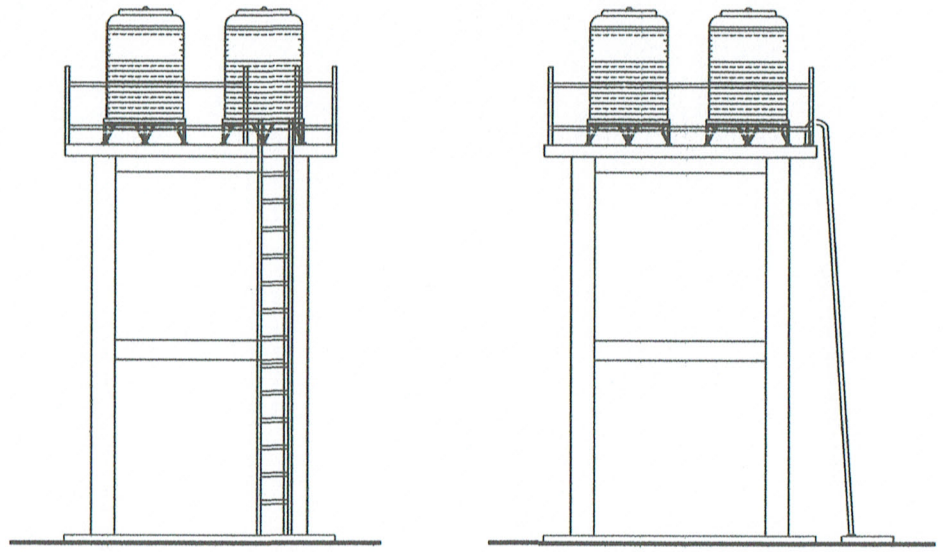

Water Tank at Visit Center

MINISTRY OF AGRICULTURE AND FORESTRY (MAF)	Sustainable Forest and Land Management in the Dry Dipterocarp Forest Ecosystems of Southern Lao PDR									
DEPARTMENT OF FOREST RESOURCES MANAGEMENT (DFRM)	REV. No.	DESCRIPTION	DATE		NAME	SIGNATURE	DATE	DRAWING TITLE	DRAWING NO. A
				DESIGNED BY:				WATER TANK AT VISIT CENTER	SCALE -
				CHECKED BY:					
				APPROVED BY:					

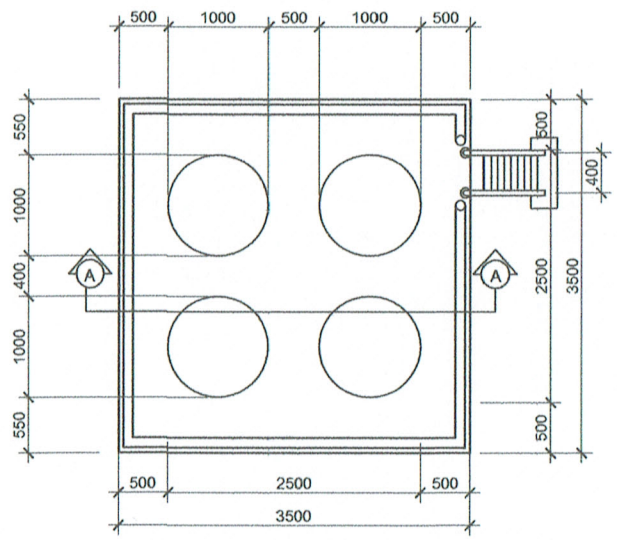

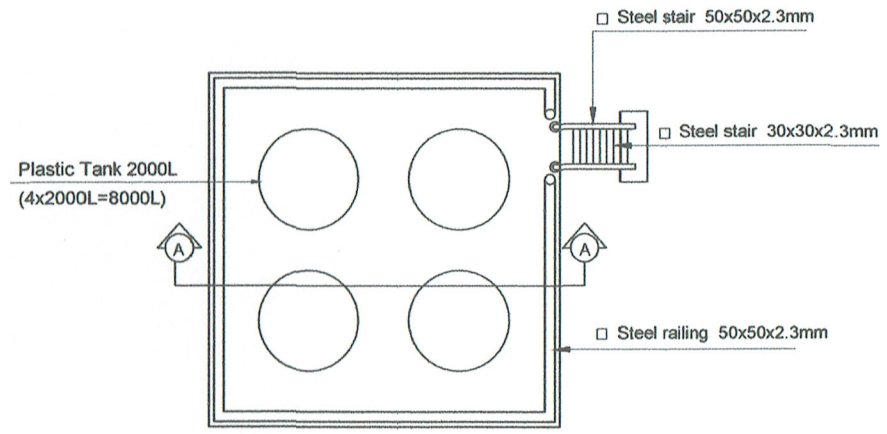

PLAN 1/75

MINISTRY OF AGRICULTURE AND FORESTRY (MAF)	Sustainable Forest and Land Management in the Dry Dipterocarp Forest Ecosystems of Southern Lao PDR								
DEPARTMENT OF FOREST RESOURCES MANAGEMENT (DFRM)	REV. No.	DESCRIPTION	DATE		NAME	SIGNATURE	DATE	DRAWING TITLE	DRAWING NO. 01
				DESIGNED BY:				WATER TANK AT VISIT CENTER PLAN	SCALE -
				CHECKED BY:					
				APPROVED BY:					

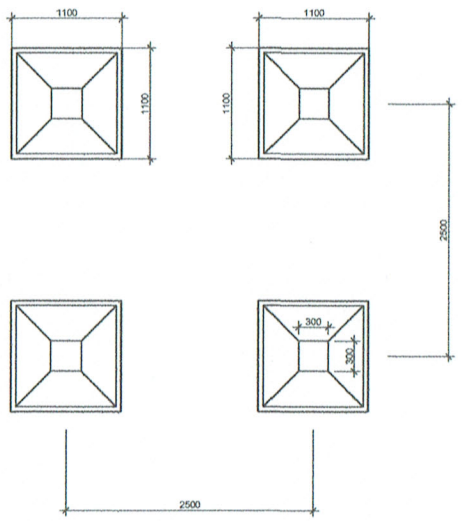

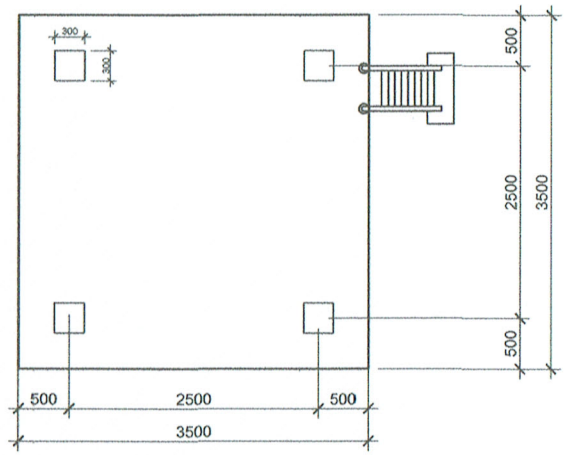

FOOTING & COLUMN PLAN 1/75

MINISTRY OF AGRICULTURE AND FORESTRY (MAF)	Sustainable Forest and Land Management in the Dry Dipterocarp Forest Ecosystems of Southern Lao PDR								
DEPARTMENT OF FOREST RESOURCES MANAGEMENT (DFRM)	REV. No.	DESCRIPTION	DATE		NAME	SIGNATURE	DATE	DRAWING TITLE	DRAWING NO. 02
				DESIGNED BY:				WATER TANK AT VISIT CENTER **FOOTING & COLUMN PLAN**	SCALE -
				CHECKED BY:					
				APPROVED BY:					

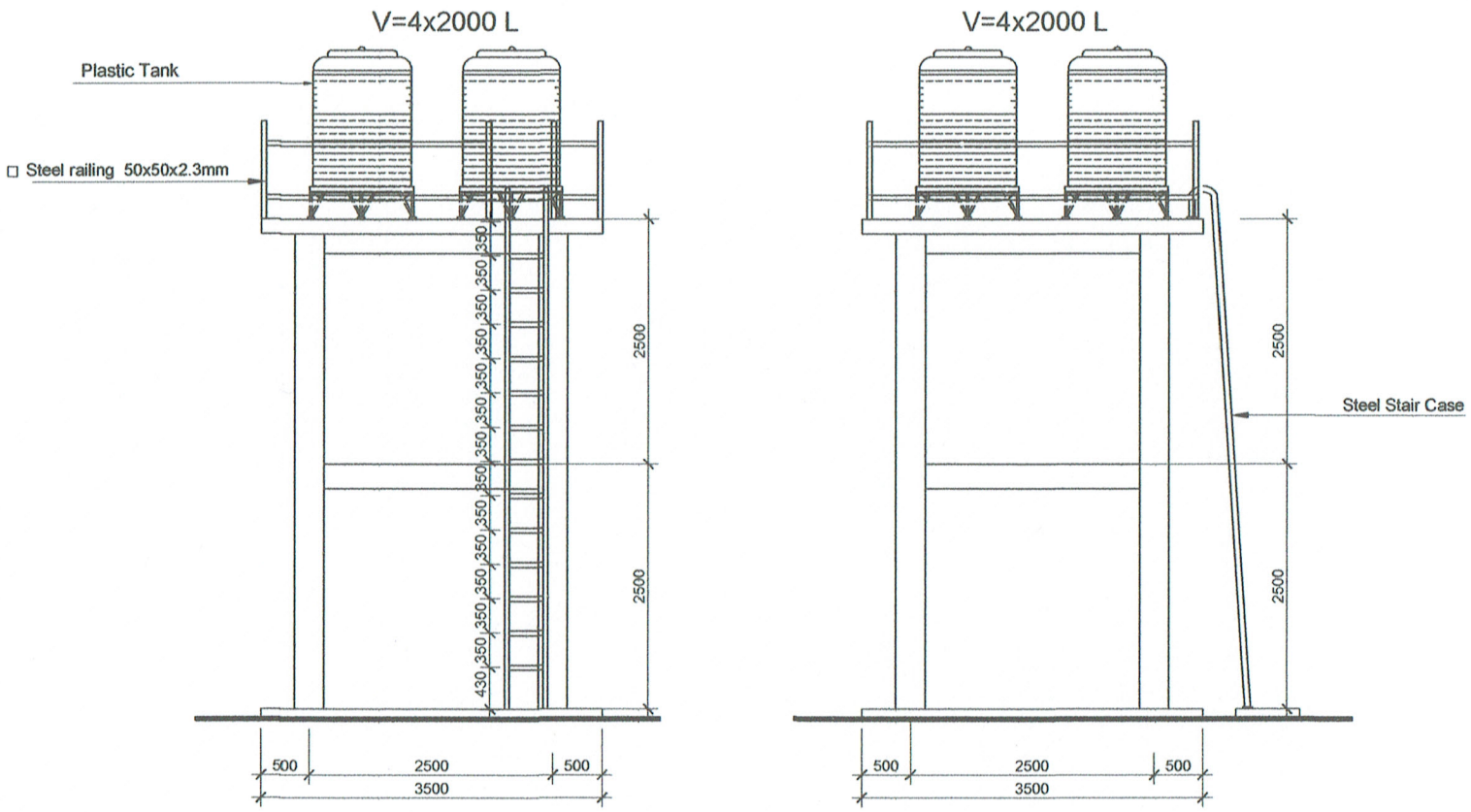

ELEVATION 1/75

MINISTRY OF AGRICULTURE AND FORESTRY (MAF)	Sustainable Forest and Land Management in the Dry Dipterocarp Forest Ecosystems of Southern Lao PDR								
DEPARTMENT OF FOREST RESOURCES MANAGEMENT (DFRM)	REV. No.	DESCRIPTION	DATE		NAME	SIGNATURE	DATE	DRAWING TITLE	DRAWING NO. 03
				DESIGNED BY:				WATER TANK AT VISIT CENTER **ELEVATION**	SCALE -
				CHECKED BY:					
				APPROVED BY:					

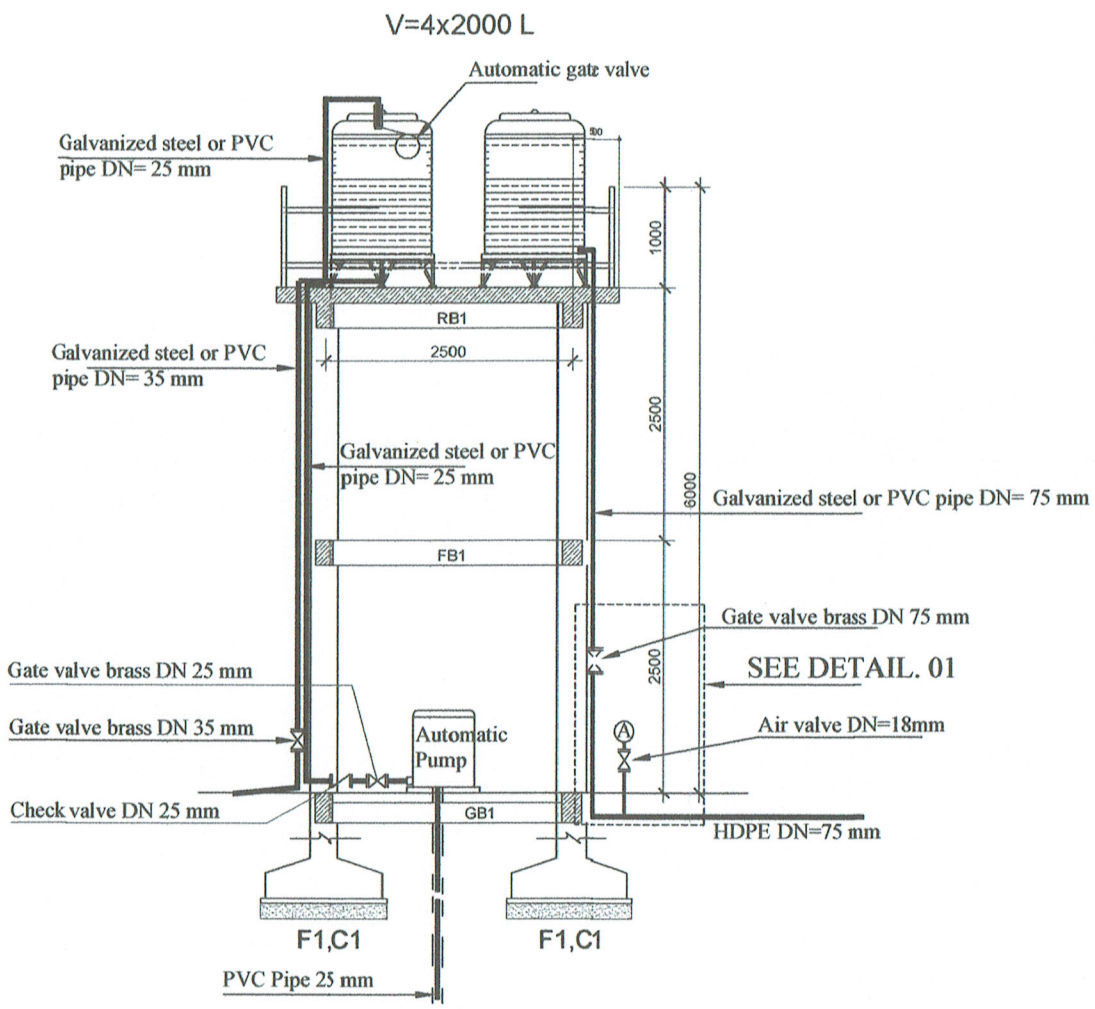

SECTION A_A 1/75

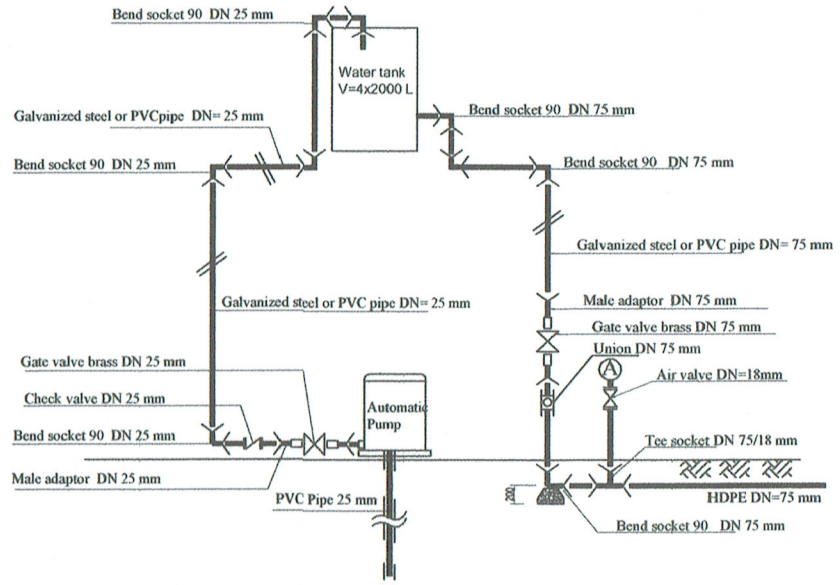

Item	Materials (DETAIL. 01)	Qty
01	Gate valve brass DN 75 mm	1
02	Gate valve brass DN 25 mm	1
03	Gate valve brass DN 35 mm	1
04	Male adaptor DN 75 mm	2
05	Male adaptor DN 25 mm	2
06	Male adaptor DN 35 mm	2
07	Tee socket DN 75/18 mm	1
08	Bend socket 90 DN 75 mm	4
09	Bend socket 90 DN 25 mm	5
10	Bend socket 90 DN 35 mm	3
11	Union DN 75 mm	1
12	Air valve DN 18 mm	1

MINISTRY OF AGRICULTURE AND FORESTRY (MAF)

DEPARTMENT OF FOREST RESOURCES MANAGEMENT (DFRM)

Sustainable Forest and Land Management in the Dry Dipterocarp Forest Ecosystems of Southern Lao PDR

REV. No.	DESCRIPTION	DATE		NAME	SIGNATURE	DATE	DRAWING TITLE	DRAWING NO.
			DESIGNED BY:					04
			CHECKED BY:				WATER TANK AT VISIT CENTER	SCALE
			APPROVED BY:				SECTION A-A	-

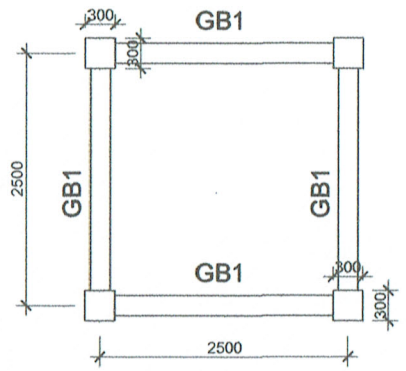

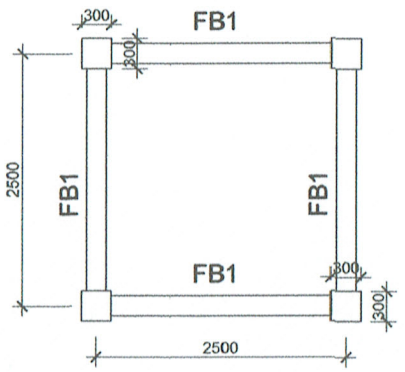

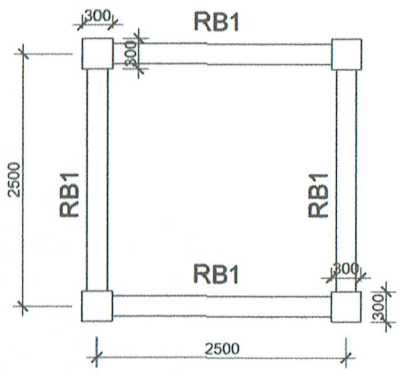

Symbol		
F1	=	1150x1150mm
C1	=	300x300mm
GB1	=	200x300mm
FB1	=	100x200mm
RB1	=	200x300mm

COLUMN & BEAM PLAN 1/75

MINISTRY OF AGRICULTURE AND FORESTRY (MAF)	Sustainable Forest and Land Management in the Dry Dipterocarp Forest Ecosystems of Southern Lao PDR									
DEPARTMENT OF FOREST RESOURCES MANAGEMENT (DFRM)	REV. No.	DESCRIPTION	DATE		NAME	SIGNATURE	DATE	DRAWING TITLE	DRAWING NO. 05
				DESIGNED BY:				WATER TANK AT VISIT CENTER COLUMN & BEAM PLAN	SCALE -
				CHECKED BY:					
				APPROVED BY:					

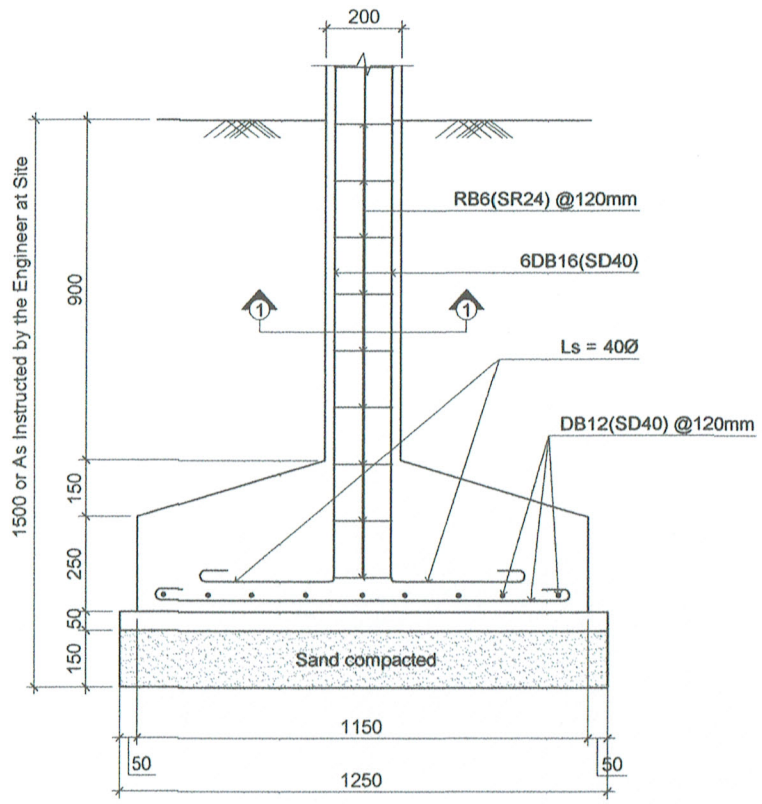

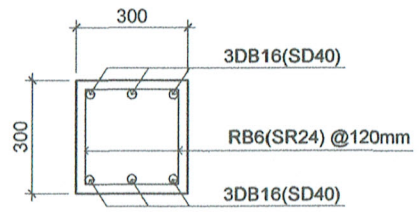

SECTION 1-1

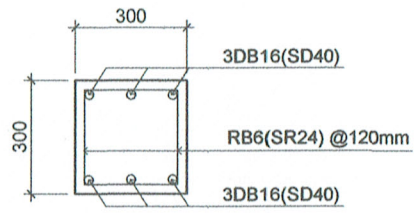

SECTION 2-2

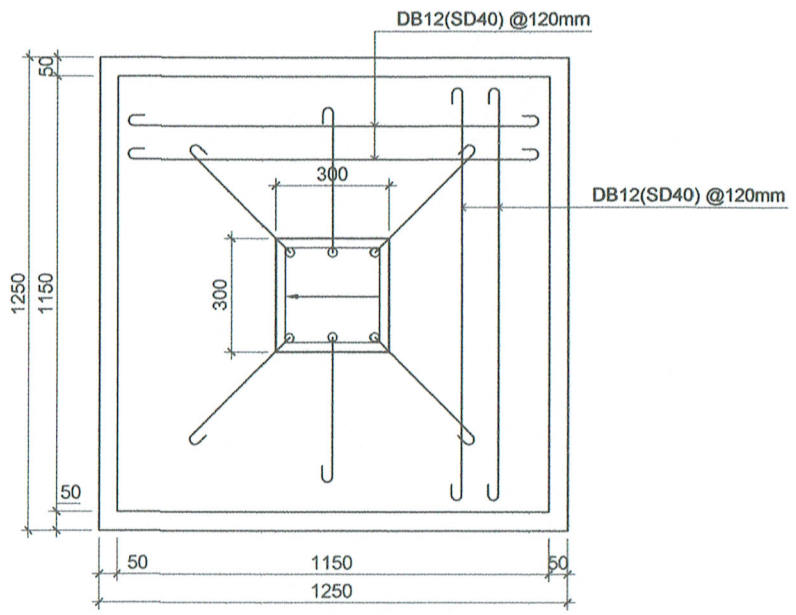

R.C FOOTING (F1)

R.C FOOTING DETAIL

SCALE: 1/20

MINISTRY OF AGRICULTURE AND FORESTRY (MAF)	Sustainable Forest and Land Management in the Dry Dipterocarp Forest Ecosystems of Southern Lao PDR								
DEPARTMENT OF FOREST RESOURCES MANAGEMENT (DFRM)	REV. No.	DESCRIPTION	DATE		NAME	SIGNATURE	DATE	DRAWING TITLE	DRAWING NO. 06
				DESIGNED BY:				WATER TANK AT VISIT CENTER **R.C FOOTING DETAIL**	SCALE -
				CHECKED BY:					
				APPROVED BY:					

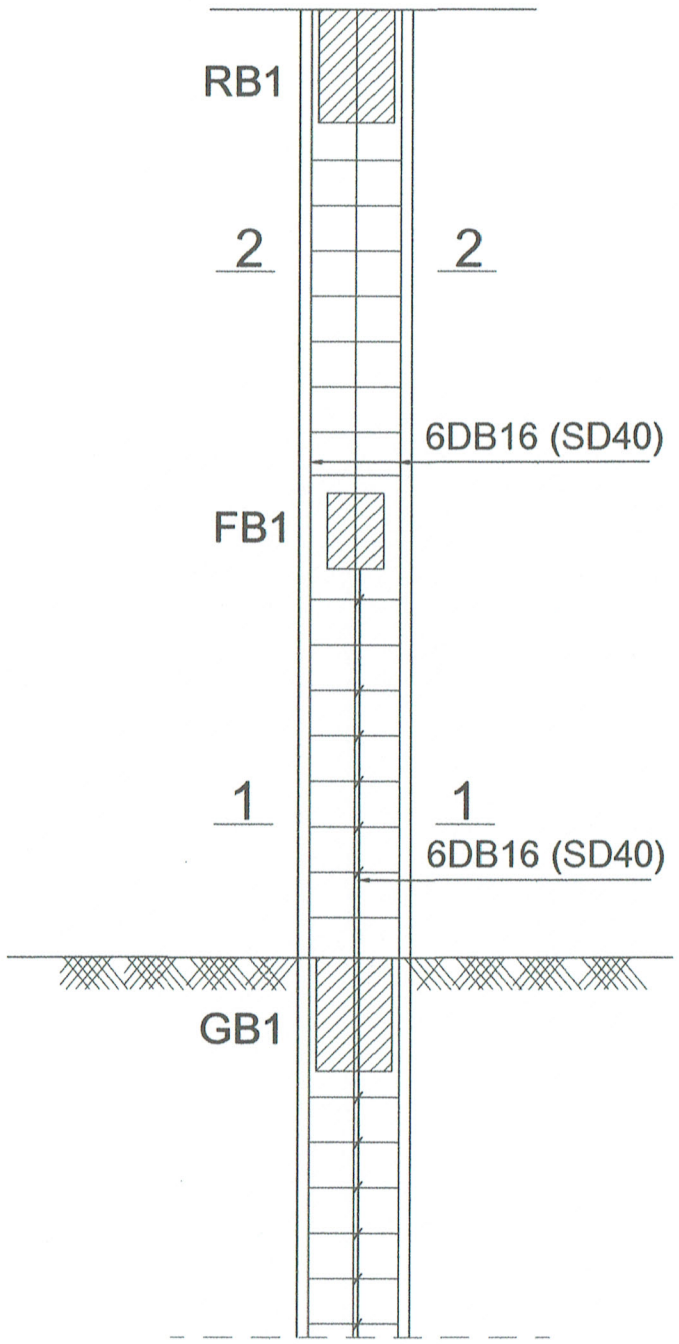

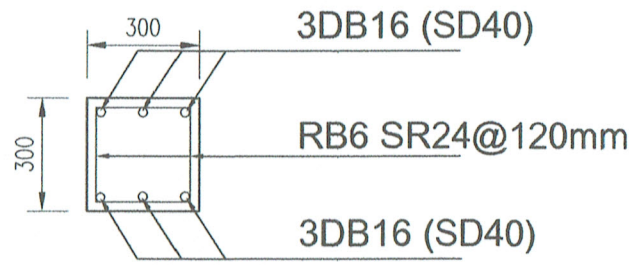

Section 2 - 2

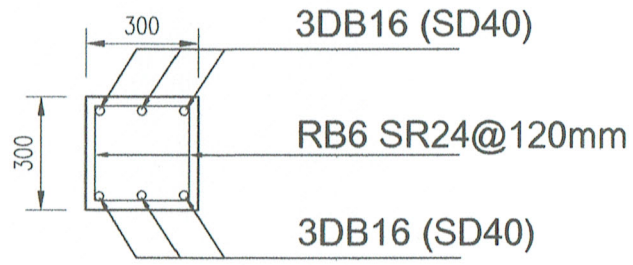

Section 1 - 1

R.C COLUMN DETAIL

SCALE: 1/20

MINISTRY OF AGRICULTURE AND FORESTRY (MAF)	Sustainable Forest and Land Management in the Dry Dipterocarp Forest Ecosystems of Southern Lao PDR								
DEPARTMENT OF FOREST RESOURCES MANAGEMENT (DFRM)	REV. No.	DESCRIPTION	DATE		NAME	SIGNATURE	DATE	DRAWING TITLE	DRAWING NO. 07
				DESIGNED BY:				WATER TANK AT VISIT CENTER **R.C COLUMN DETAIL**	SCALE -
				CHECKED BY:					
				APPROVED BY:					

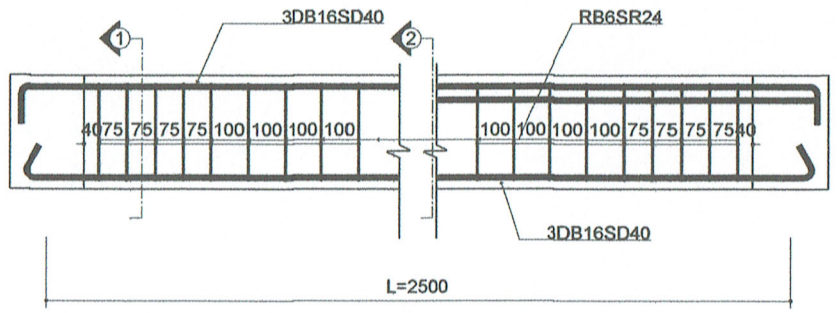

ຮູບຂະຫຍາຍເສີມເຫຼັກຄານ GB1 1:20

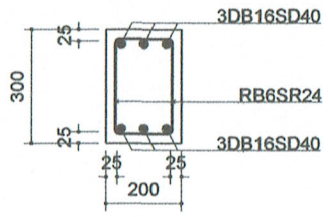

ຮູບຕັດ 1 1:20

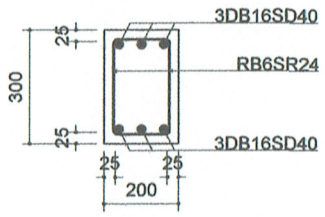

ຮູບຕັດ 2 1:20

R.C GROUND BEAM DETAIL

SCALE: 1/20

MINISTRY OF AGRICULTURE AND FORESTRY (MAF)	Sustainable Forest and Land Management in the Dry Dipterocarp Forest Ecosystems of Southern Lao PDR								
DEPARTMENT OF FOREST RESOURCES MANAGEMENT (DFRM)	REV. No.	DESCRIPTION	DATE		NAME	SIGNATURE	DATE	DRAWING TITLE	DRAWING NO. 08
				DESIGNED BY:				WATER TANK AT VISIT CENTER **R.C GROUND BEAM DETAIL**	SCALE -
				CHECKED BY:					
				APPROVED BY:					

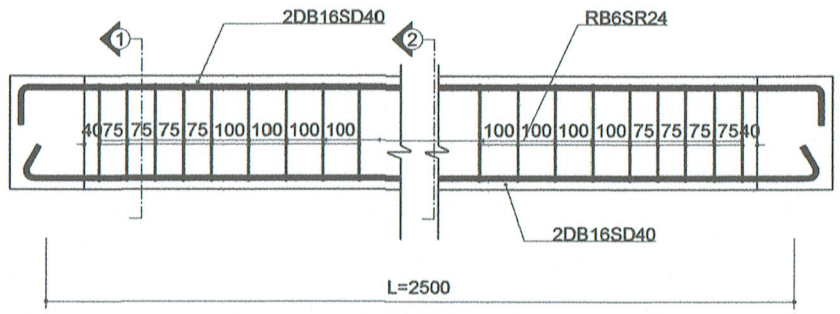

ຮູບຂະຫຍາຍເສີມເຫຼັກຄານ FB1 1:20

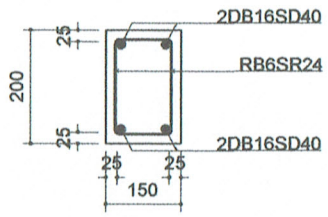

ຮູບຕັດ 1 1:20

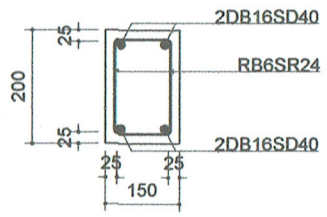

ຮູບຕັດ 2 1:20

R.C FIRST BEAM DETAIL

SCALE: 1/20

MINISTRY OF AGRICULTURE AND FORESTRY (MAF)	Sustainable Forest and Land Management in the Dry Dipterocarp Forest Ecosystems of Southern Lao PDR								
DEPARTMENT OF FOREST RESOURCES MANAGEMENT (DFRM)	REV. No.	DESCRIPTION	DATE		NAME	SIGNATURE	DATE	DRAWING TITLE	DRAWING NO. 09
				DESIGNED BY:				WATER TANK AT VISIT CENTER R.C FIRST BEAM DETAIL	SCALE -
				CHECKED BY:					
				APPROVED BY:					

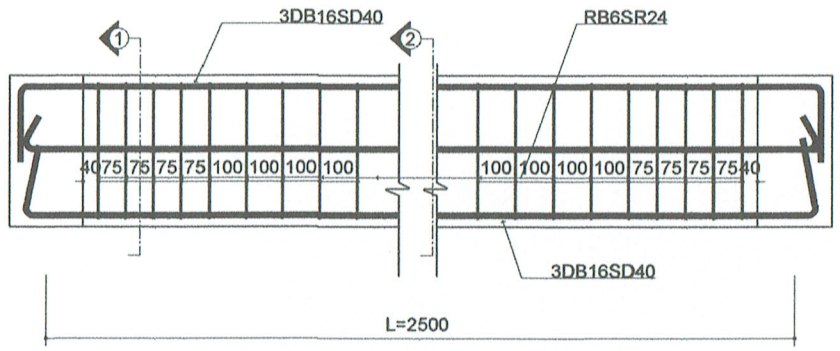

ຮູບຂະຫຍາຍເສີມເຫຼັກຄານ RB1 1:20

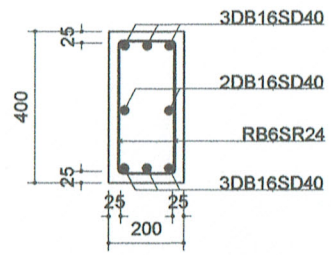

ຮູບຕັດ 1 1:20

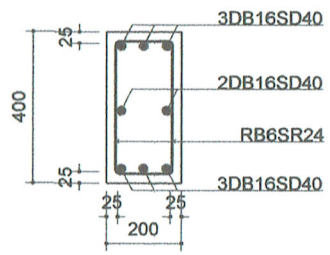

ຮູບຕັດ 2 1:20

R.C TOP BEAM DETAIL

SCALE: 1/20

MINISTRY OF AGRICULTURE AND FORESTRY (MAF)	Sustainable Forest and Land Management in the Dry Dipterocarp Forest Ecosystems of Southern Lao PDR								
DEPARTMENT OF FOREST RESOURCES MANAGEMENT (DFRM)	REV. No.	DESCRIPTION	DATE		NAME	SIGNATURE	DATE	DRAWING TITLE	DRAWING NO. 10
				DESIGNED BY:				WATER TANK AT VISIT CENTER R.C TOP BEAM DETAIL	SCALE -
				CHECKED BY:					
				APPROVED BY:					

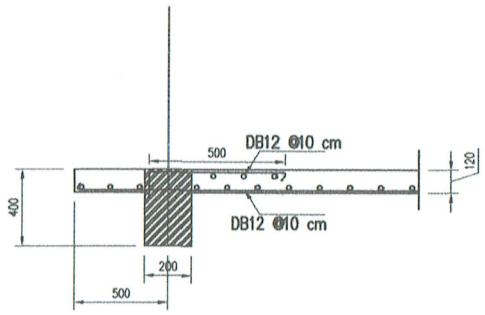

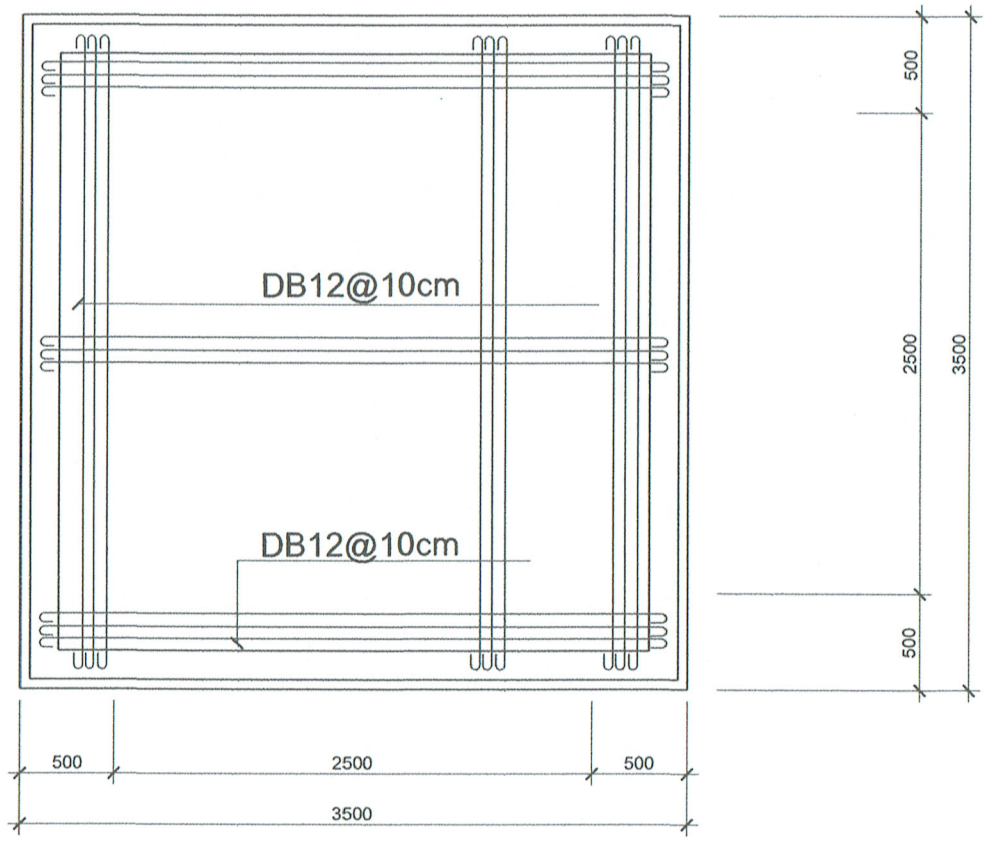

R.C SLAB DETAIL

SCALE: 1/40

MINISTRY OF AGRICULTURE AND FORESTRY (MAF)	Sustainable Forest and Land Management in the Dry Dipterocarp Forest Ecosystems of Southern Lao PDR									
DEPARTMENT OF FOREST RESOURCES MANAGEMENT (DFRM)	REV. No.	DESCRIPTION	DATE		NAME	SIGNATURE	DATE	DRAWING TITLE	DRAWING NO. 11
				DESIGNED BY:				WATER TANK AT VISIT CENTER R.C SLAB DETAIL	SCALE -
				CHECKED BY:					
				APPROVED BY:					