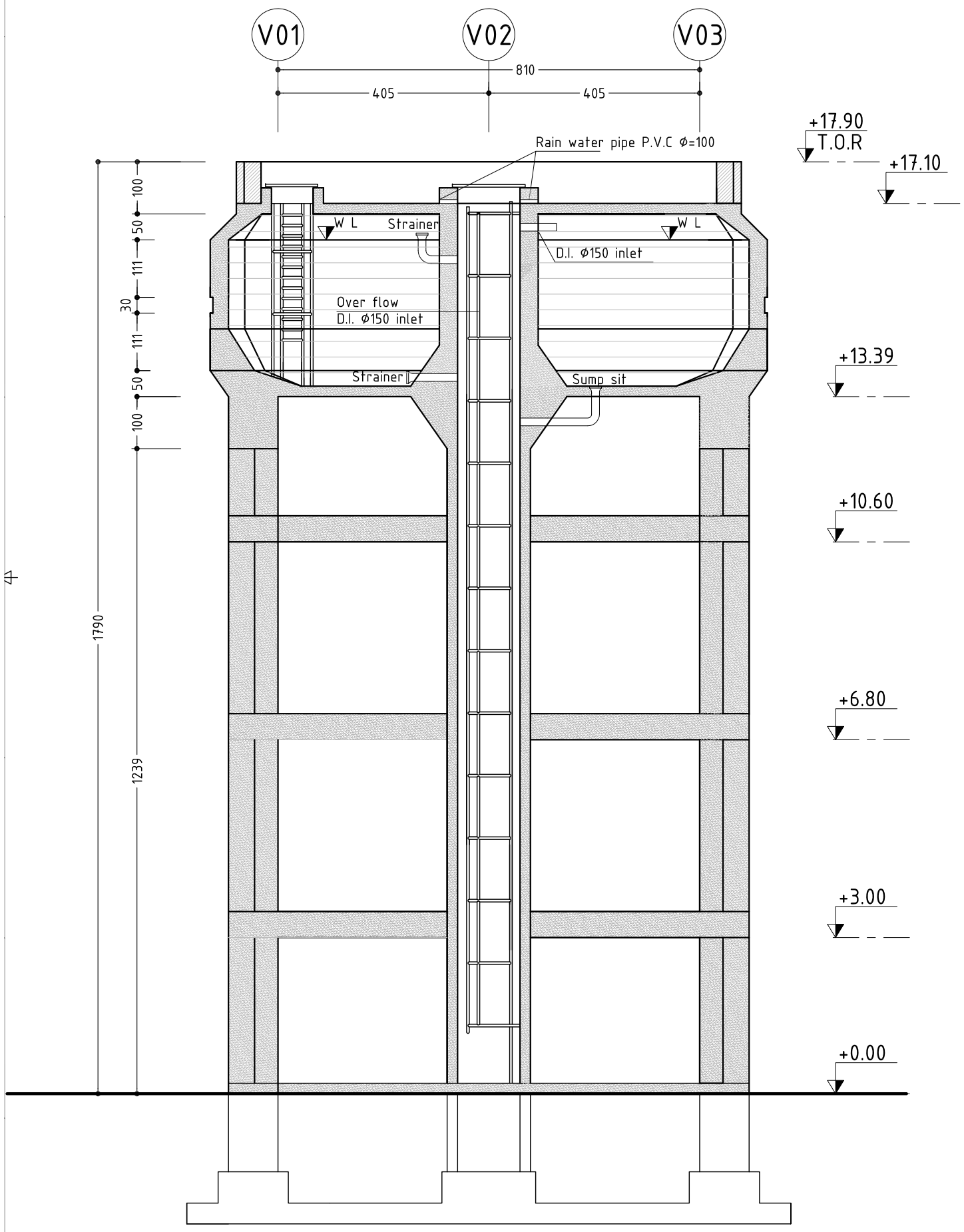

SECTION A-A

Scale 1/100

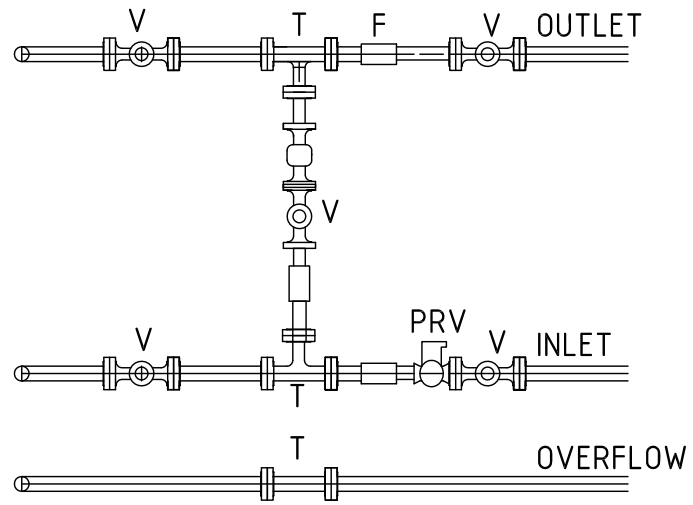

DETAIL OF VALVE

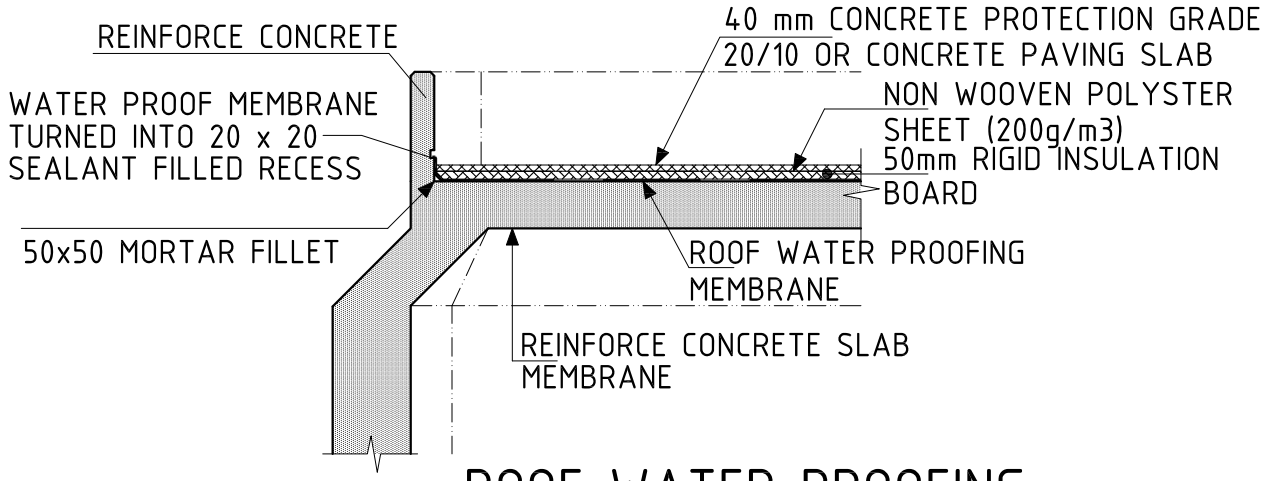

ROOF WATER PROOFING
DETAIL FOR NEW WORKS

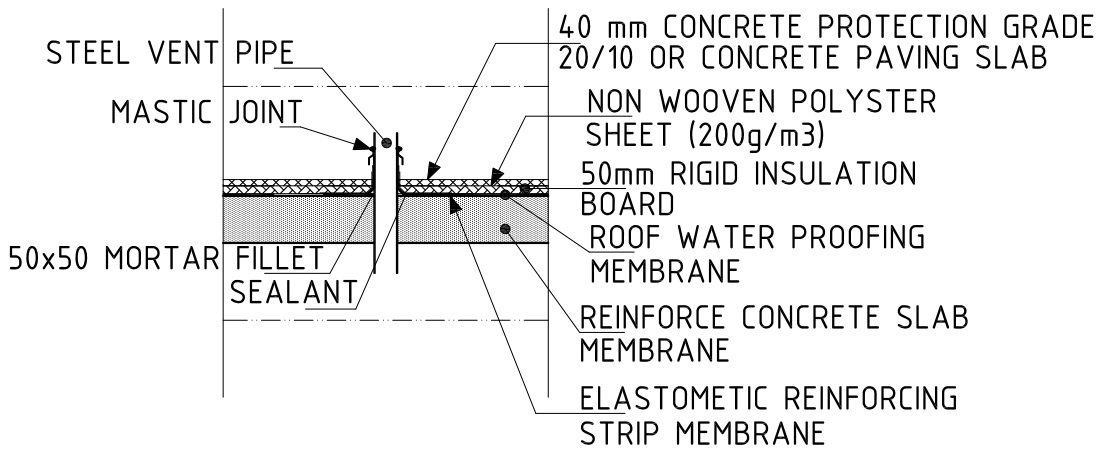

RESERVOIR VENT PIPE INSTALLATION
AND ROOF WATER PROOFING

Notes:

REPUBLIC OF LEBANON

COUNCIL FOR DEVELOPMENT
AND RECONSTRUCTION

THE MINISTRY OF
HYDRAULIC AND ELECTRIC RESOURCES

NERP YEARS 2 & 3
WATER SUPPLY AND WASTEWATER PROJECT

WATER SUPPLY - TRANSMISSION LINE
NEW SITE

ANSARIEH WATER TOWER

CAPACITY 300m3

Key Plan:

Index	Date	drawn	Checked	Approved	Modifications
1	140311	EM	EM	EM	-

Consultant:

Contractor:

Mechanical:

Electrical:

Project:
ANSARIEH WATER TOWER

Drawing Title:
WATER TOWER
Sections and Details
-

Size: A3
Plot No: 1268
Sheet: 5/10
Region: ANSARIEH
Rev: A
Scale: 1/100

ST-ZA-AN (Projet) FP-100 (Tranche) 05 (Nbr)

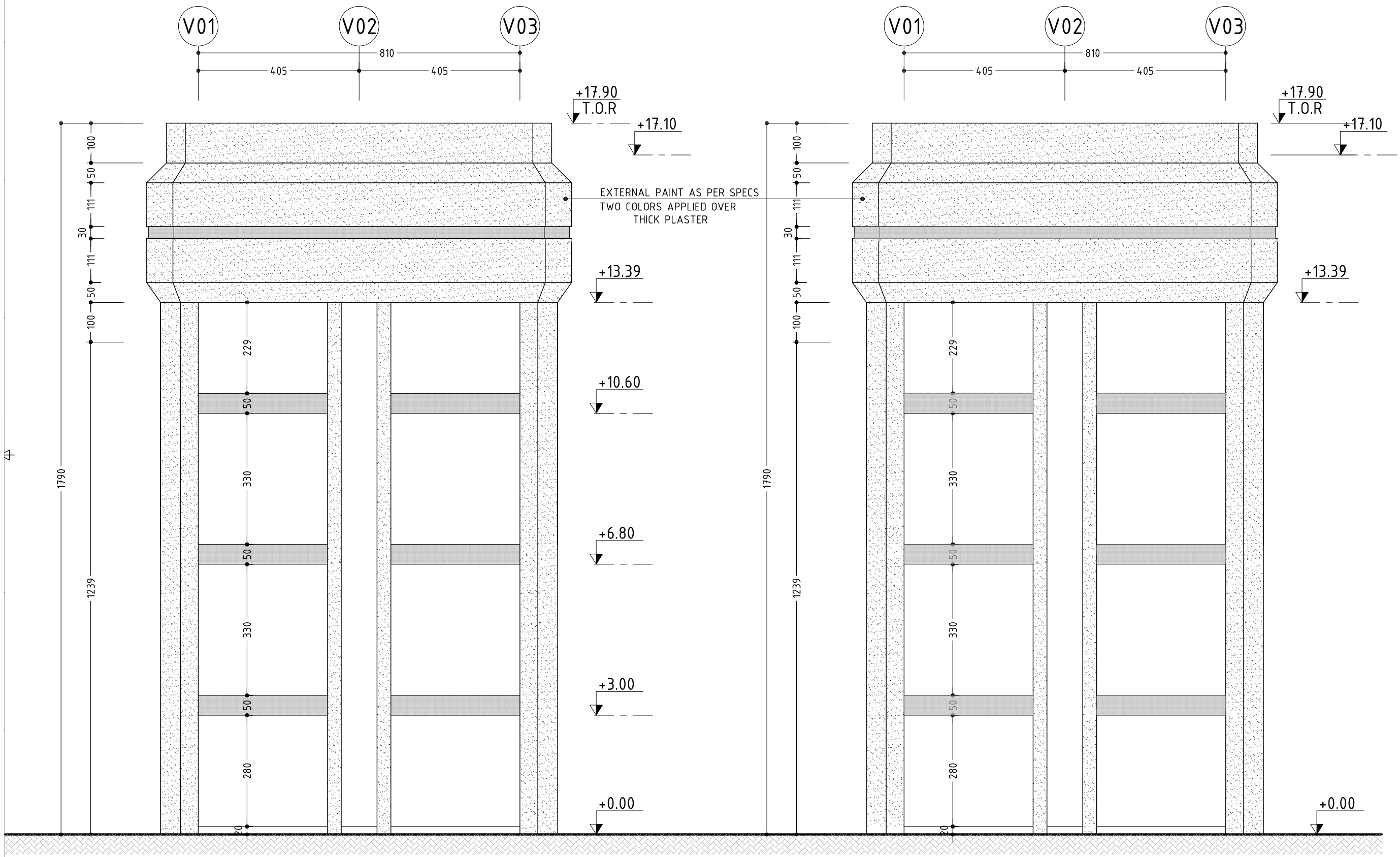

ELEVATION -A

ELEVATION -B

Notes:

REPUBLIC OF LEBANON

COUNCIL FOR DEVELOPMENT
AND RECONSTRUCTION

THE MINISTRY OF
HYDRAULIC AND ELECTRIC RESOURCES

NERP YEARS 2 & 3
WATER SUPPLY AND WASTEWATER PROJECT

WATER SUPPLY - TRANSMISSION LINE
NEW SITE

ANSARIEH WATER TOWER

CAPACITY 300m3

Index	Date	drawn	Checked	Approved	Modifications
1	140311	EM	EM	EM	-

Consultant:

Contractor:

Mechanical:

Electrical:

Project:
ANSARIEH WATER TOWER

Drawing Title:
WATER TOWER
Elevations
-

Size: A3
Plot No: 1268
Sheet: 6/10
Region: ANSARIEH
Rev: A
Scale: 1/100

ST-ZA-AN (Projet) FP-100 (Plan) 06 (Nbr)

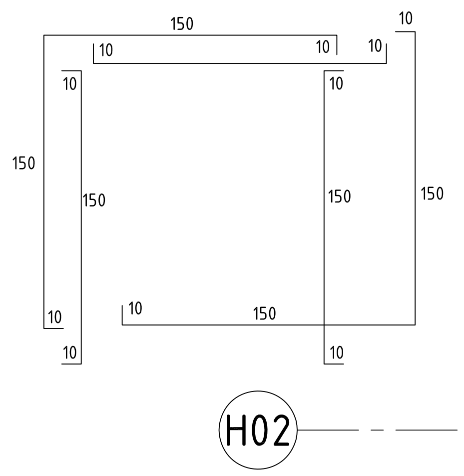

TYPICAL ELEVATION DETAIL ON RC WALL FOR STIRRUPS POSITION

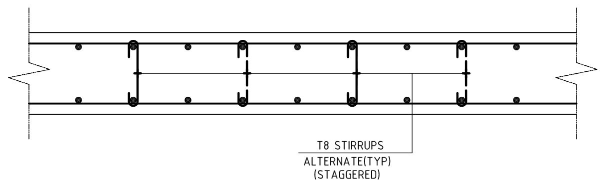

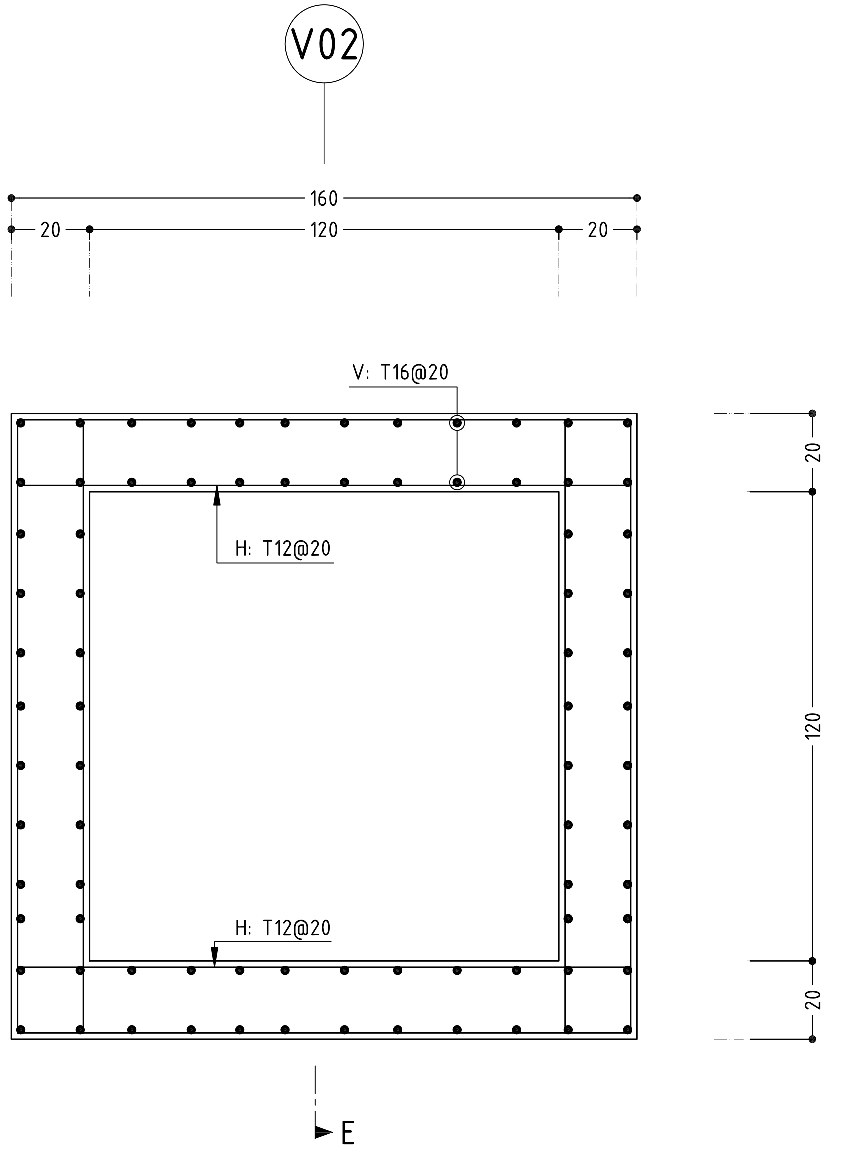

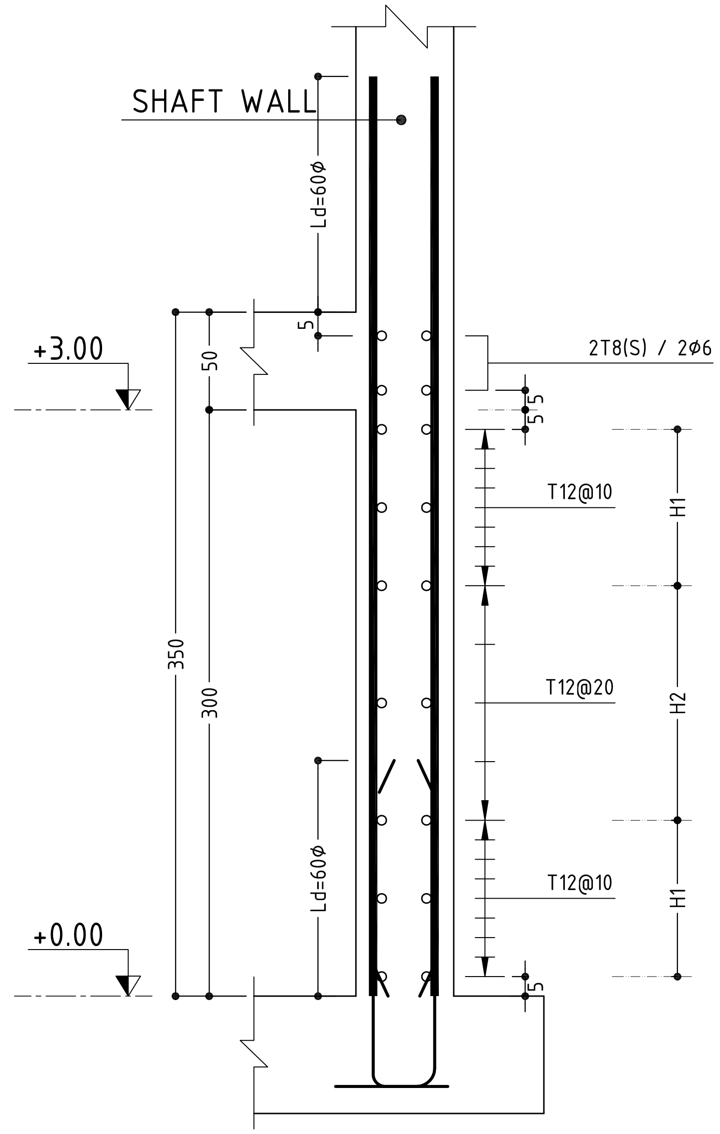

SHAFT REINFORCEMENT

Scale 1/20

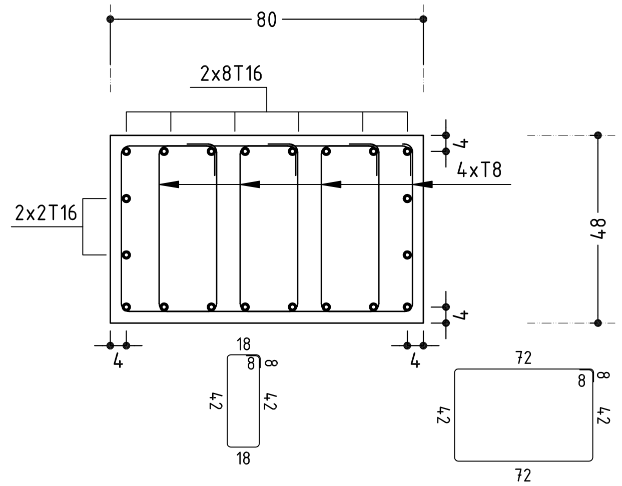

C2 REINFORCEMENT DETAIL

Scale 1/20

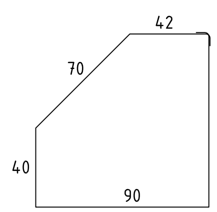

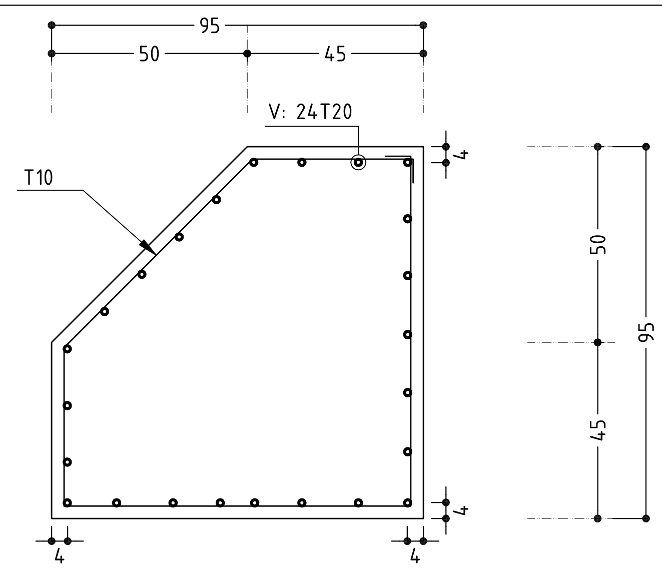

C1 REINFORCEMENT DETAIL

Scale 1/20

Notes:

REPUBLIC OF LEBANON

COUNCIL FOR DEVELOPMENT AND RECONSTRUCTION

THE MINISTRY OF HYDRAULIC AND ELECTRIC RESOURCES

NERP YEARS 2 & 3

WATER SUPPLY AND WASTEWATER PROJECT

WATER SUPPLY - TRANSMISSION LINE

NEW SITE

ANSARIEH WATER TOWER

CAPACITY 300m3

اتحاد بلديات ساحل الزهراني

Key Plan:

Index	Date	drawn	Checked	Approved	Modifications
1	140311	EM	EM	EM	-

Consultant:

Contractor:

Mechanical:

Electrical:

Project: ANSARIEH WATER TOWER

Drawing Title: REINFORCEMENT PLANS — SHAFT & COLUMNS DETAILS

Size: A3 | Plot No: 1268 | Sheet: 7/10 | Region: ANSARIEH | Rev: A | Scale: 1/20

ST-ZA-AN (Project) — RP-200 (Item) — 01 (Nbr)