A new UNDP Building replacing UNDSS old building

United Nations Development Programme (UNDP)

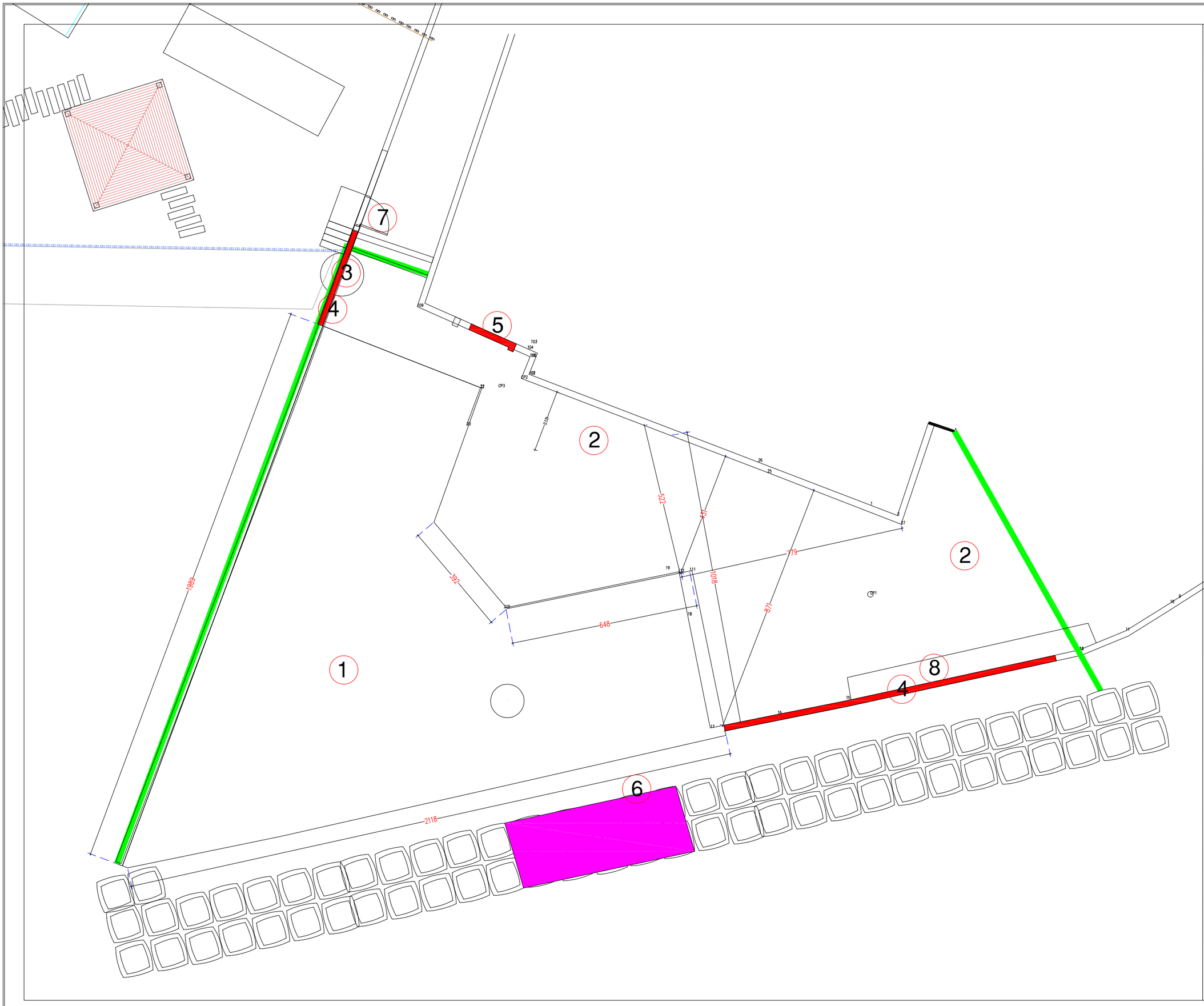

1. Demolition for the two story building.
2. Demolition for the floor tiles then reinstall a new interlock tiles.
3. Dismantling for the revolve door.
4. Demolition for the walls.
5. Demolition the walls and Dismantling the windows in order to be door in all floors except ground floor.
6. dismantle the HESCO to install temporary gate then reinstall the HESCO.
7. Make an opening on the wall as an alternative access to the old building.
8. Demolition for the Plant pit

A new temporary partition with one layer razor wire

Demolition for the walls

United Nations Development Programme (UNDP)	
Project:	A New Building Replacing UNDSS Old Building
Location:	Sana'a- Yemen
Drawing Title:	Mobilization Work
Design By :	UNDP Engineering Unit
Drawing Type: Architecture	Status : Tender
Date: 13 April 2022	Drawing No. 1

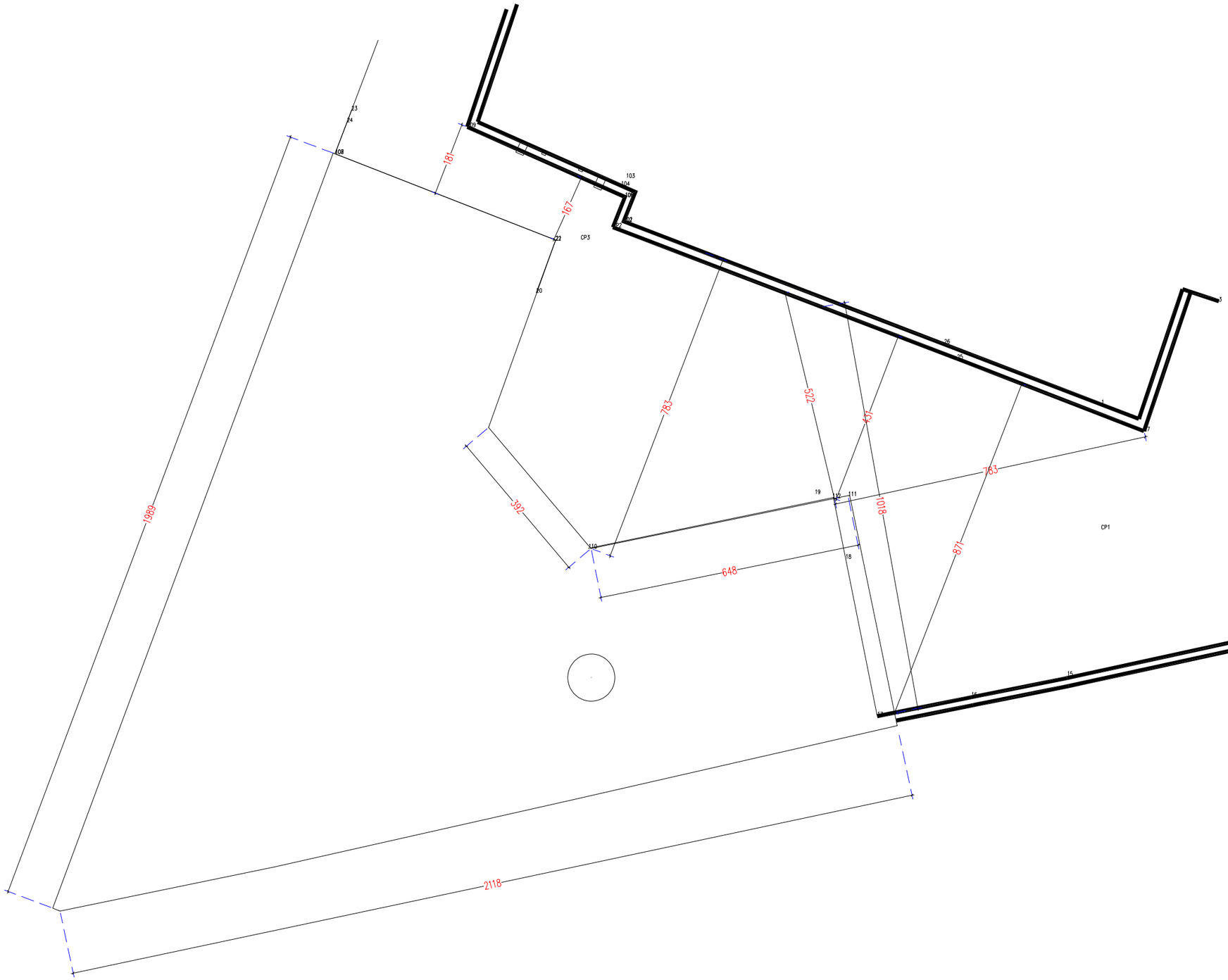

United Nations Development Programme (UNDP)	
Project:	*A New Building Replacing UNDSS Old Building*
Location:	*Sana'a- Yemen*
Drawing Title:	*Survey*
Design By :	*UNDP Engineering Unit*
Drawing Type: *Architecture*	*Status :* *Tender*
Date: *13 April 2022*	*Drawing No.* 2

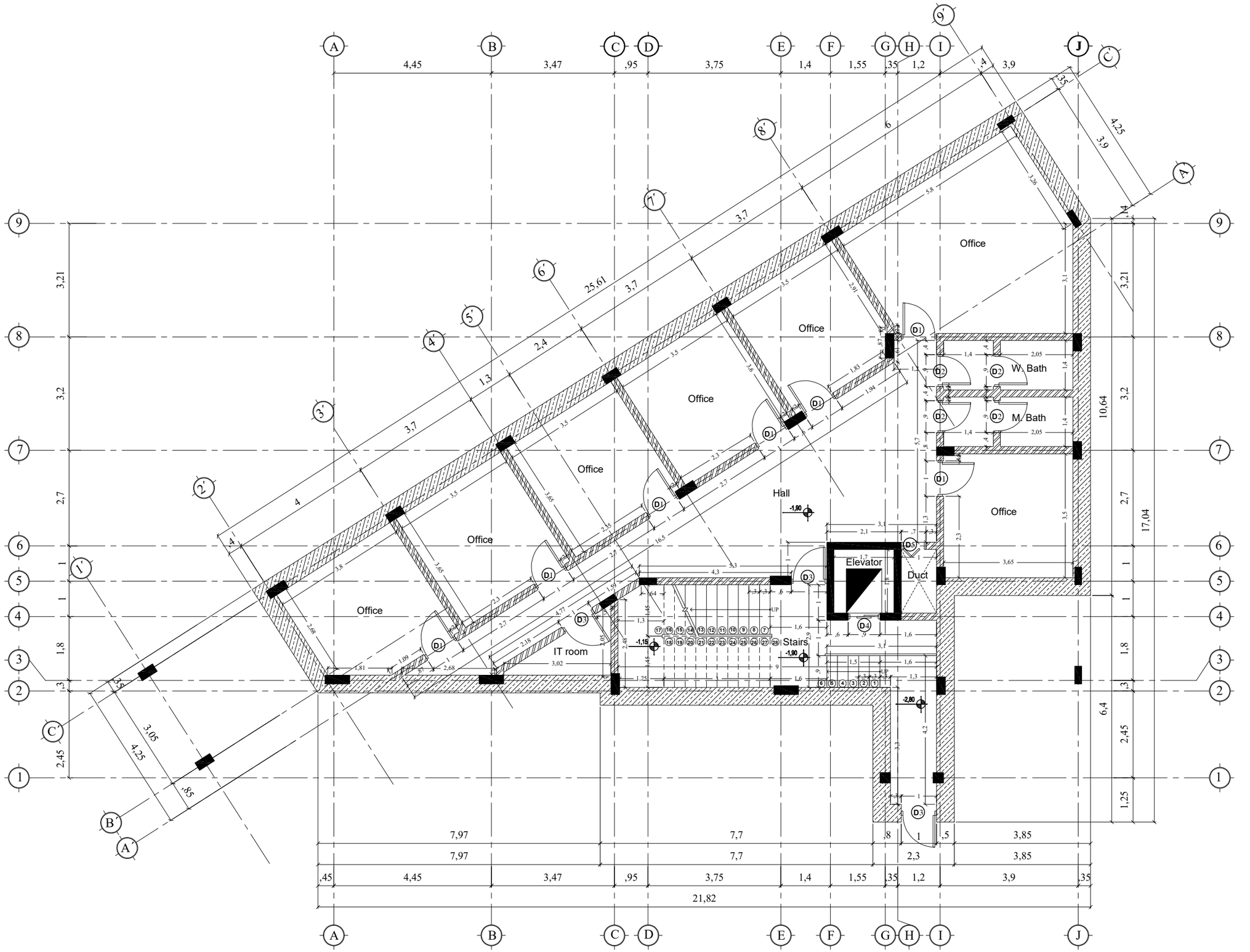

Schedule of Doors

Symbol	Specification	Width	Height	Number
D1	Swing wooden door	1.00m	2.20m	7
D2	Swing wooden door	0.90m	2.20m	4
D3	Swing armored door	1.00m	2.20m	3
D4	Sliding door	9.00m	2.00m	1
D5	Accordion wooden door	0.70m	2.00m	1

United Nations Development Programme (UNDP)

Project: *A New Building Replacing UNDSS Old Building*

Location: *Sana'a- Yemen*

Drawing Title: *Basement*

Design By : *UNDP Engineering Unit*

Drawing Type: *Architecture* | *Status :* *Tender*

Date: *13 April 2022* | *Drawing No.* 3

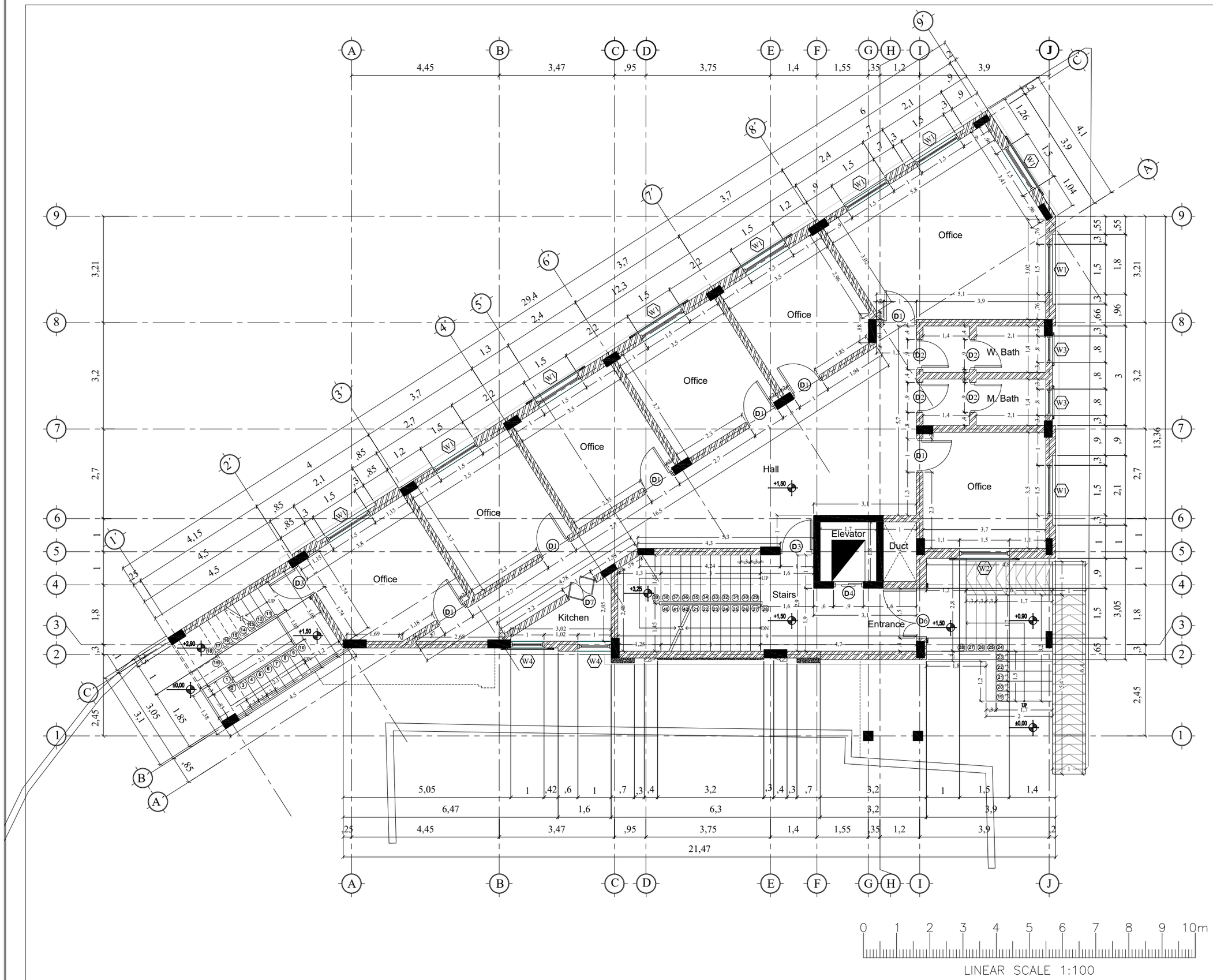

Schedule of Windows

Symbol	Specification	Width	Height	Sill	Number
W1	Sliding aluminum window with wooden color	1.50m	1.00m	1.60m	10
W2	Sliding aluminum window with wooden color	1.50m	1.60m	1.00m	1
W3	Hopper aluminum window with wooden color	0.80m	1.00m	1.60m	2
W4	Hopper aluminum window with wooden color	1.00m	1.40m	1.20m	2

Schedule of Doors

Symbol	Specification	Width	Height	Number
D1	Swing wooden door	1.00m	2.20m	7
D2	Swing wooden door	0.90m	2.20m	4
D3	Swing armored door	1.00m	2.20m	2
D4	Sliding door	9.00m	2.00m	1
D6	Two leaf armored door	1.50m	2.50m	1
D7	Double Swinging with two leaf aluminum door	1.00m	1.00m	1

United Nations Development Programme (UNDP)

Project: *A New Building Replacing UNDSS Old Building*

Location: *Sana'a- Yemen*

Drawing Title: *Ground floor*

Design By : *UNDP Engineering Unit*

Drawing Type: *Architecture*

Status : *Tender*

Date: *13 April 2022*

Drawing No. 4

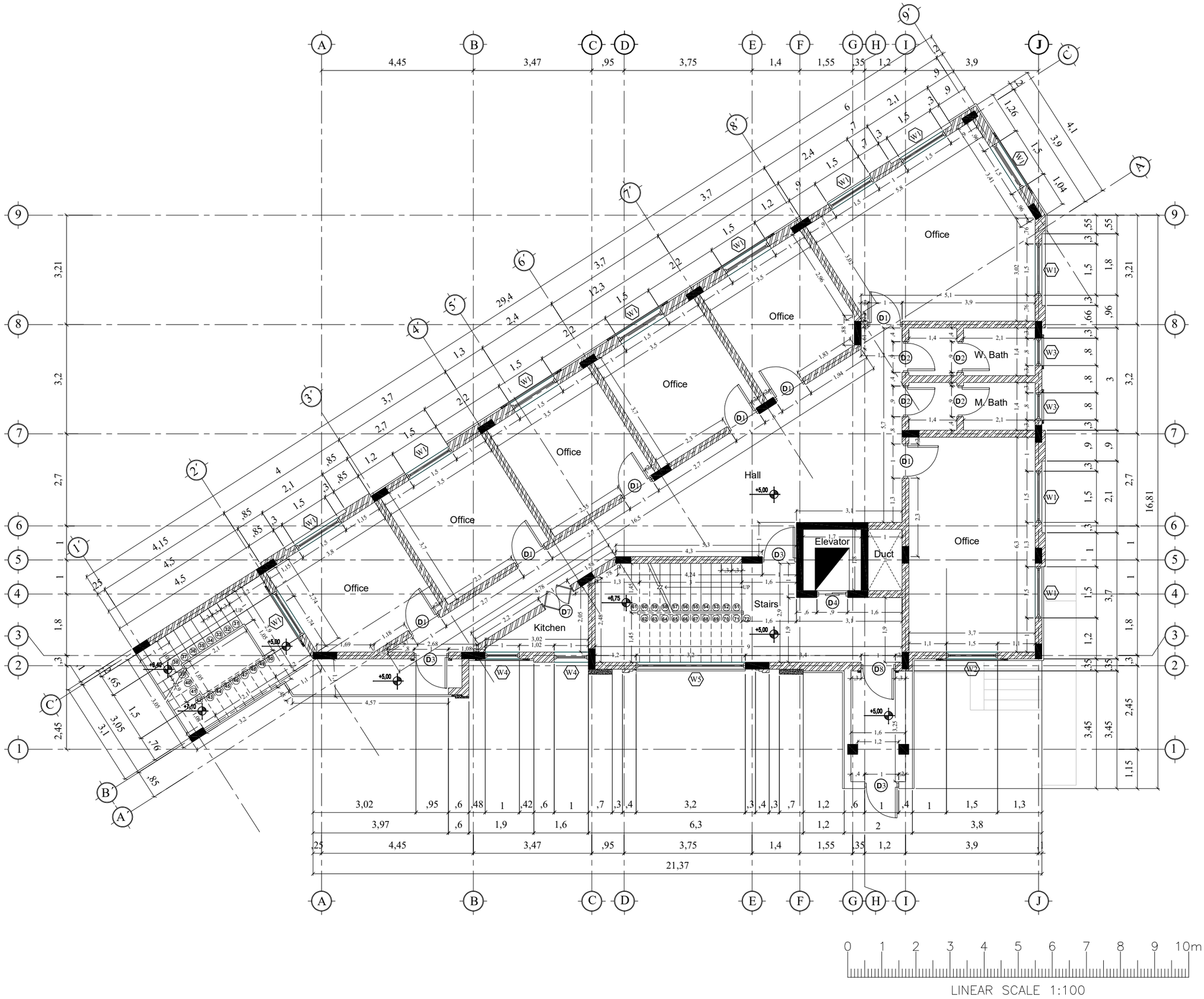

Schedule of Windows

Symbol	Specification	Width	Height	Sill	Number
W1	Sliding aluminum window with wooden color	1.50m	1.00m	1.60m	12
W2	Sliding aluminum window with wooden color	1.50m	1.60m	1.00m	1
W3	Hopper aluminum window with wooden color	0.80m	1.00m	1.60m	2
W4	Hopper aluminum window with wooden color	1.00m	1.40m	1.20m	2
W5	Aluminum Window with wooden color	3.20m	8.00m	0.00m	1

Schedule of Doors

Symbol	Specification	Width	Height	Number
D1	Swing wooden door	1.00m	2.20m	7
D2	Swing wooden door	0.90m	2.20m	4
D3	Swing armored door	1.00m	2.20m	3
D4	Sliding door	9.00m	2.00m	1
D7	Double Swinging with two leaf aluminum door	1.00m	1.00m	1
D8	Swing aluminum door with wooden color	1.00m	2.20m	1

United Nations Development Programme (UNDP)

Project: *A New Building Replacing UNDSS Old Building*

Location: *Sana'a- Yemen*

Drawing Title: *Typical floor*

Design By : *UNDP Engineering Unit*

Drawing Type: *Architecture* | *Status :* *Tender*

Date: *13 April 2022* | *Drawing No.* 5

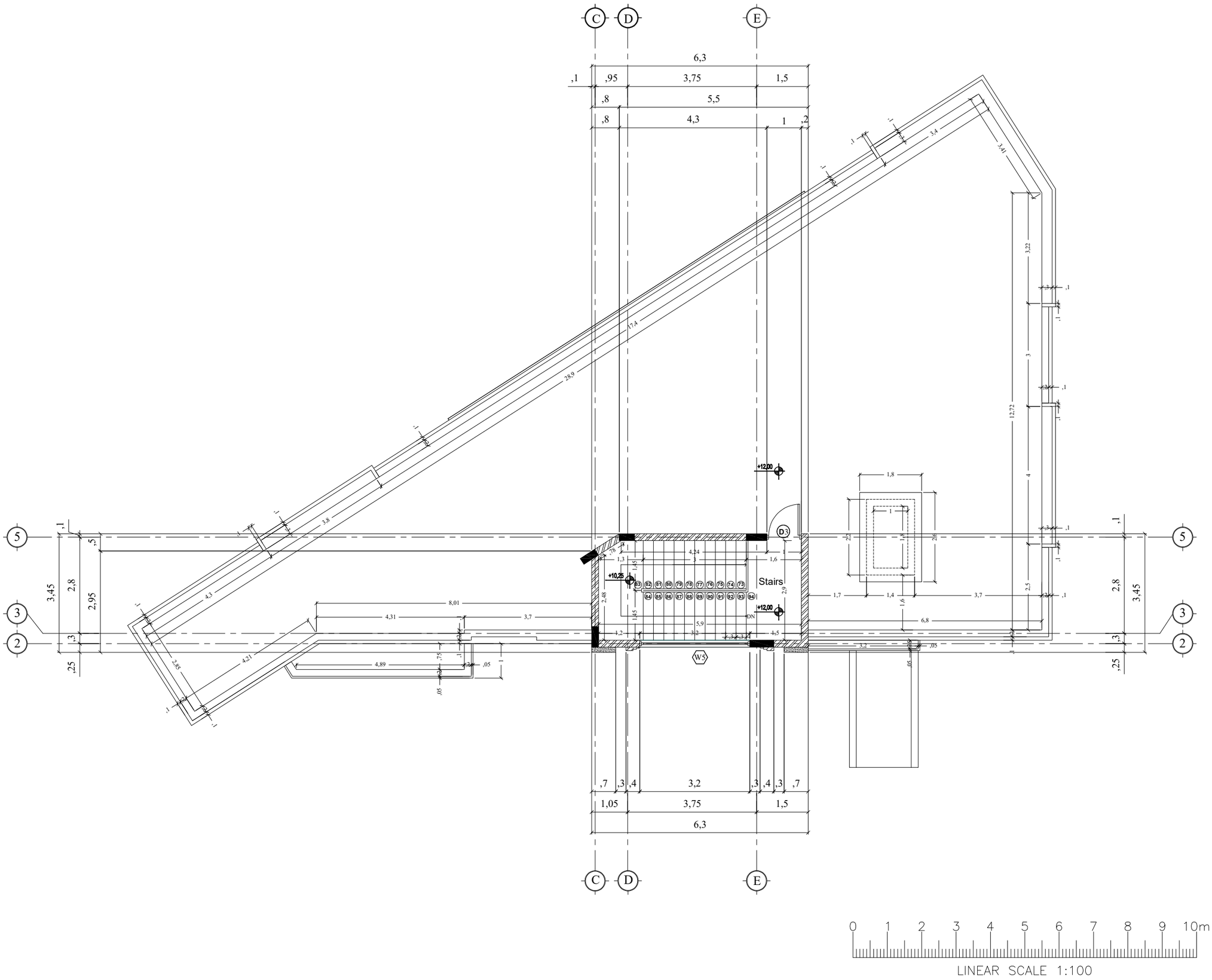

N

Schedule of Windows

Symbol	Specification	Width	Height	Sill	Number
W5	Aluminum Window with wooden color	3.20m	8.00m	-	1

Schedule of Doors

Symbol	Specification	Width	Height	Number
D3	Swing armored door	1.00m	2.20m	1

United Nations Development Programme (UNDP)

Project: *A New Building Replacing UNDSS Old Building*

Location: *Sana'a- Yemen*

Drawing Title: *Roof*

Design By : *UNDP Engineering Unit*

Drawing Type: *Architecture*

Status : *Tender*

Date: *13 April 2022*

Drawing No. 6

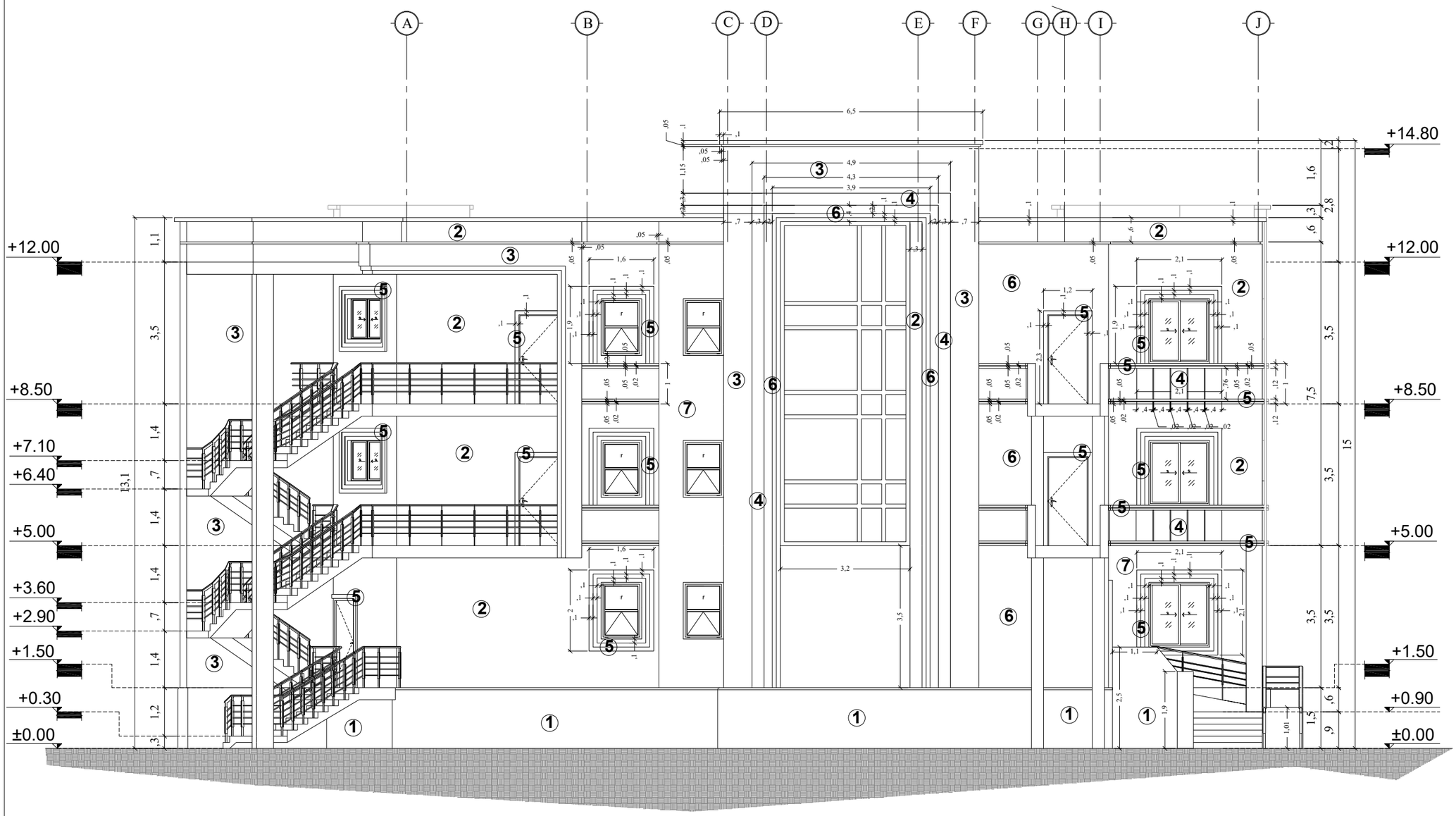

0 1 2 3 4 5 6 7 8 9 10m

LINEAR SCALE 1:100

Schedule of Materials

Symbol	Material
1	Habash stone
2	Gray Stucco textured plastering with 2.5cm thickness
3	White Stucco textured plastering with 2.5cm thickness
4	White Stucco textured plastering with 5cm thickness
5	White Mullion Stone with 7.5cm thickness
6	Red stone with 5cm thickness
7	Red stone with 10cm thickness

United Nations Development Programme (UNDP)

Project: *A New Building Replacing UNDSS Old Building*

Location: *Sana'a- Yemen*

Drawing Title: *Front Elevation*

Design By : *UNDP Engineering Unit*

Drawing Type: *Architecture*

Status : *Tender*

Date: *13 April 2022*

Drawing No. 7

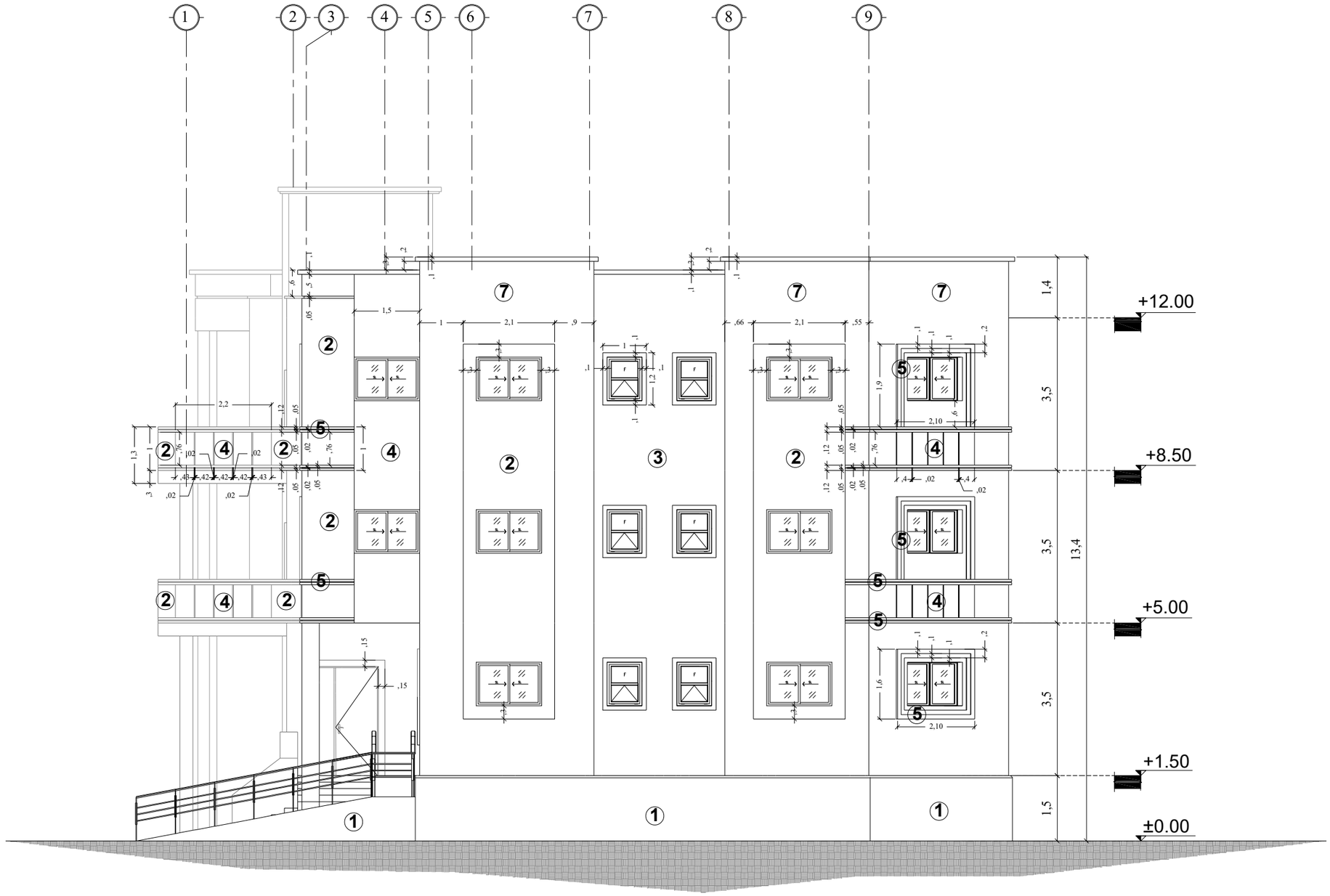

Schedule of Materials

Symbol	Material
1	Habash stone
2	Gray Stucco textured plastering with 2.5cm thickness
3	White Stucco textured plastering with 2.5cm thickness
4	White Stucco textured plastering with 5cm thickness
5	White Mullion Stone with 7.5cm thickness
7	Red stone with 10cm thickness

0 1 2 3 4 5 6 7 8 9 10m

LINEAR SCALE 1:100

United Nations Development Programme (UNDP)

Project: A New Building Replacing UNDSS Old Building

Location: Sana'a- Yemen

Drawing Title: Side Elevation

Design By : UNDP Engineering Unit

Drawing Type: Architecture

Status : Tender

Date: 13 April 2022

Drawing No. 8

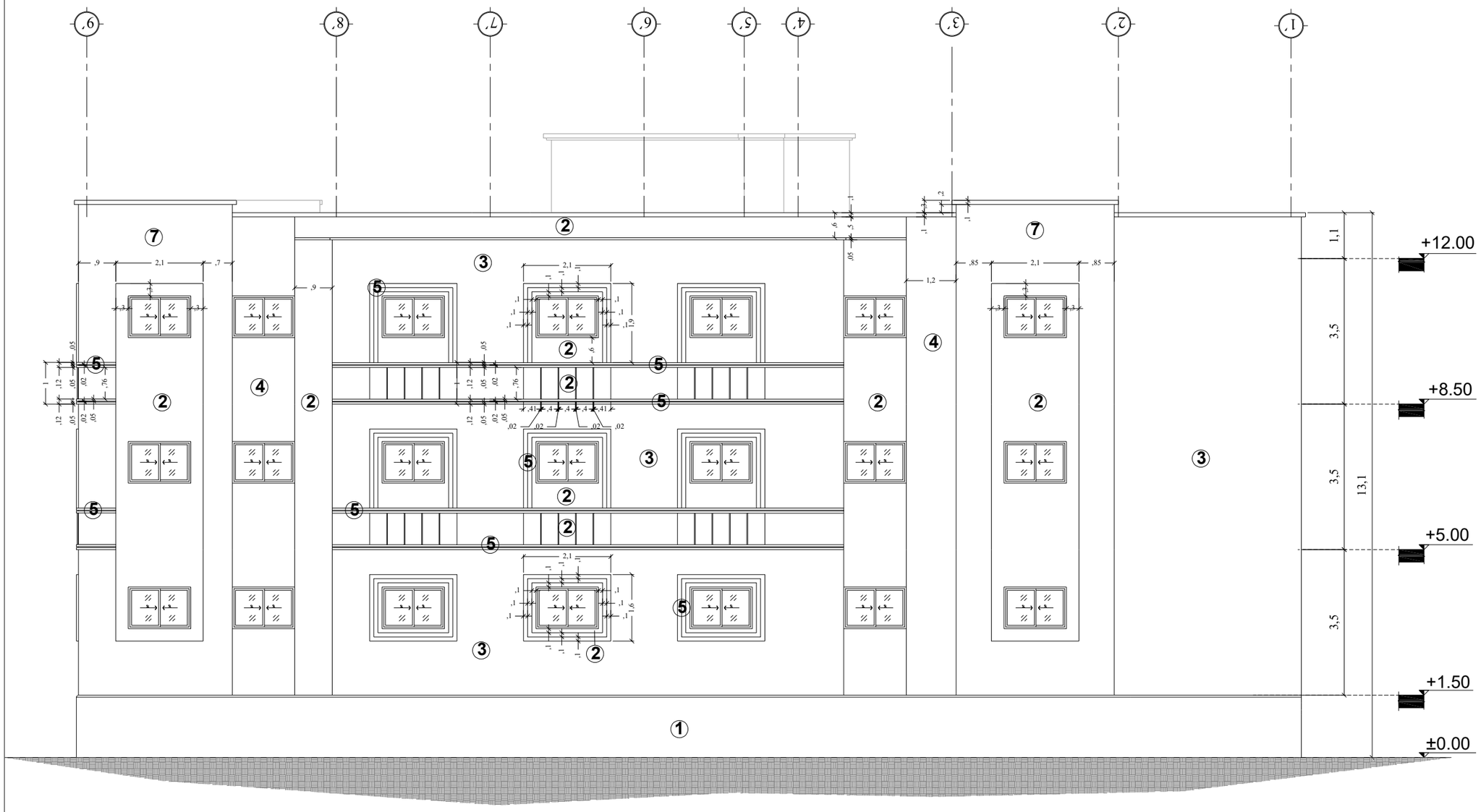

Schedule of Materials

Symbol	Material
1	Habash stone
2	Gray Stucco textured plastering with 2.5cm thickness
3	White Stucco textured plastering with 2.5cm thickness
4	White Stucco textured plastering with 5cm thickness
5	White Mullion Stone with 7.5cm thickness
7	Red stone with 10cm thickness

United Nations Development Programme (UNDP)

Project: *A New Building Replacing UNDSS Old Building*

Location: *Sana'a- Yemen*

Drawing Title: *Back Elevation*

Design By : *UNDP Engineering Unit*

Drawing Type: *Architecture* | *Status :* *Tender*

Date: *13 April 2022* | *Drawing No.* 9

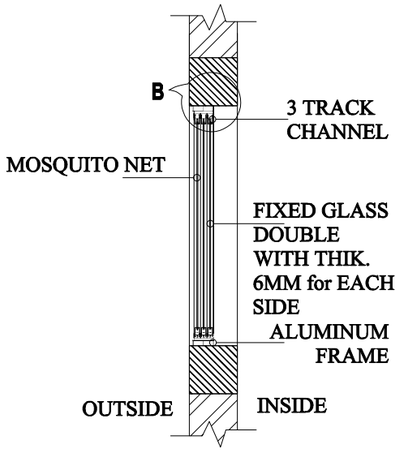

SECTION A-A

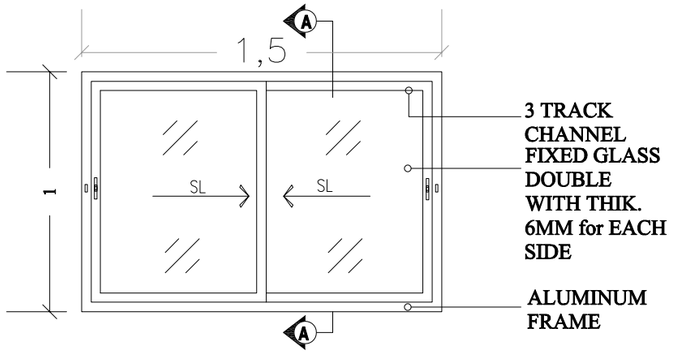

OUTER ELEVATION

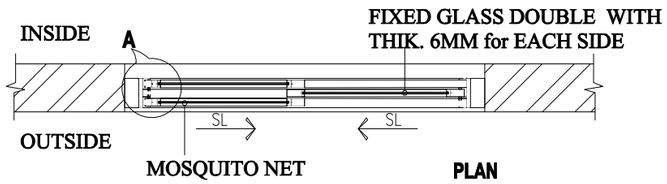

PLAN

W1 - (1.50m X 1.00m)

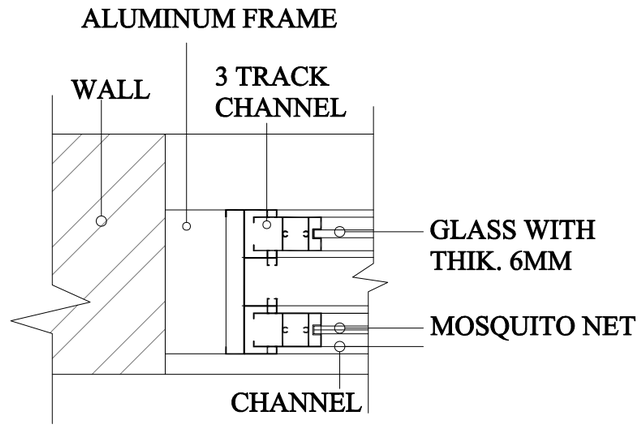

DETAIL - A

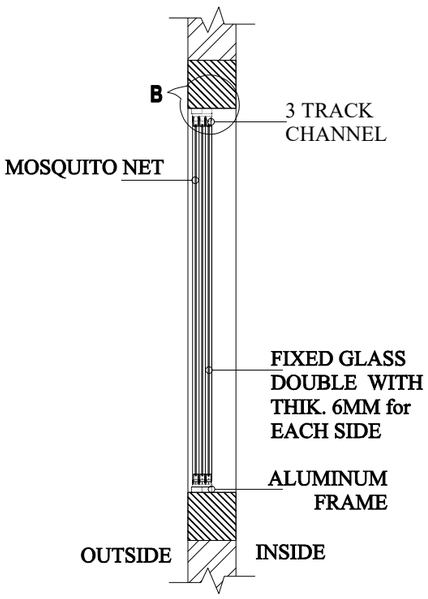

SECTION B-B

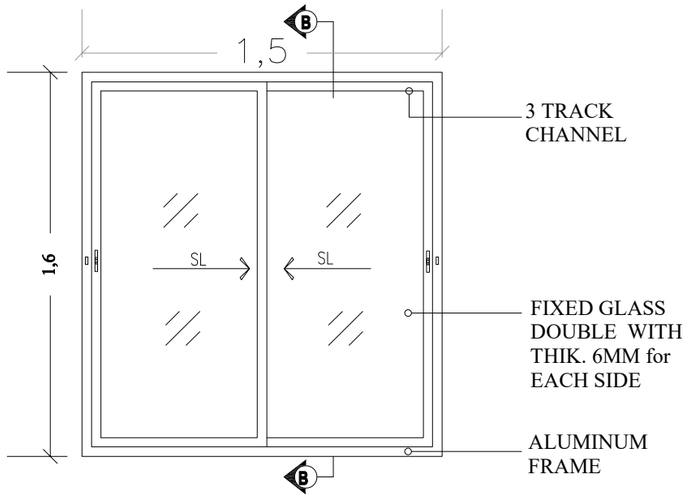

OUTER ELEVATION

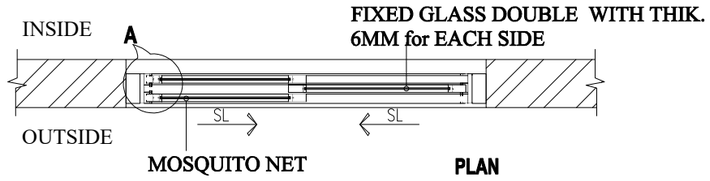

PLAN

W2 - (1.50m X 1.60m)

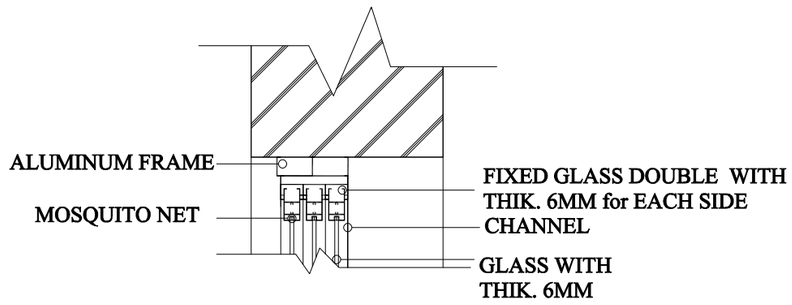

DETAIL - B

United Nations Development Programme (UNDP)	
Project:	A New Building Replacing UNDSS Old Building
Location:	Sana'a- Yemen
Drawing Title:	Windows Details
Design By :	UNDP Engineering Unit
Drawing Type: Architecture	Status : Tender
Date: 13 April 2022	Drawing No. 10

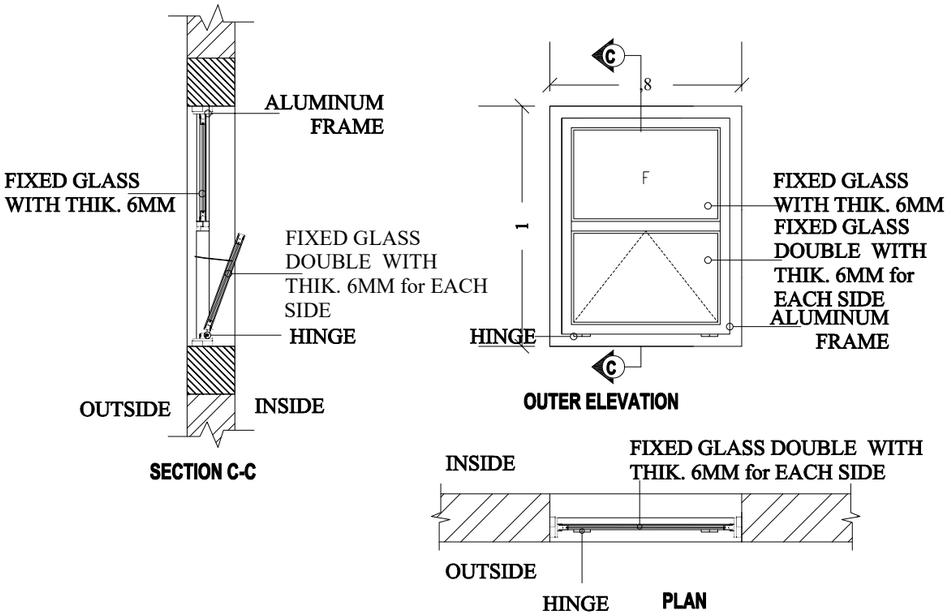

W3 - (0.80m X 1.00m)

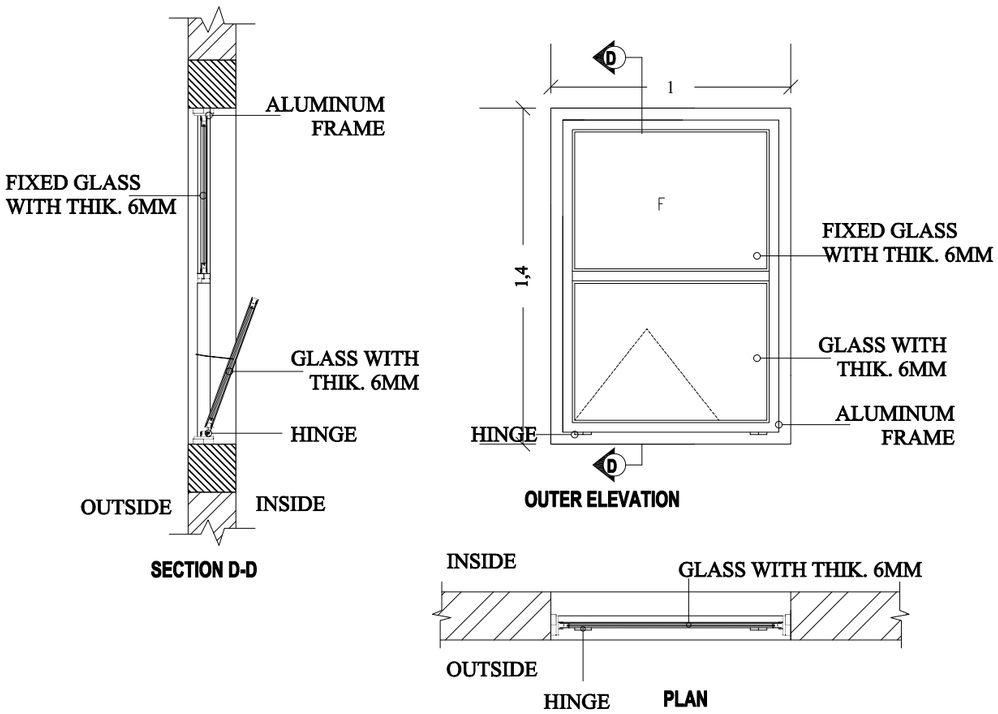

W4 - (1.00m X 1.40m)

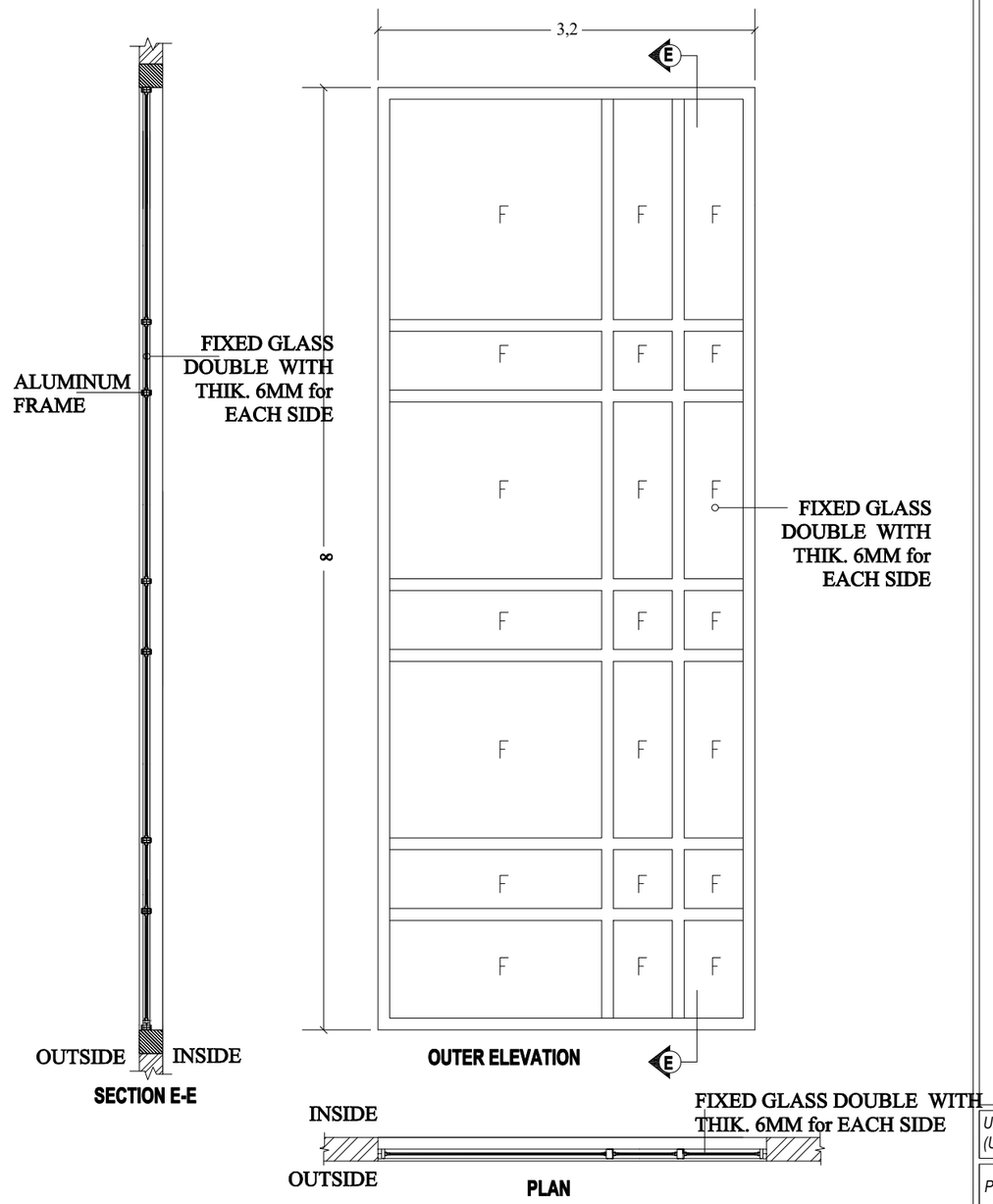

W5 - (3.20m X 8.00m)

United Nations Development Programme (UNDP)	
Project: A New Building Replacing UNDSS Old Building	
Location: Sana'a- Yemen	
Drawing Title: Windows Details	
Design By : UNDP Engineering Unit	
Drawing Type: Architecture	Status : Tender
Date: 13 April 2022	Drawing No. 11

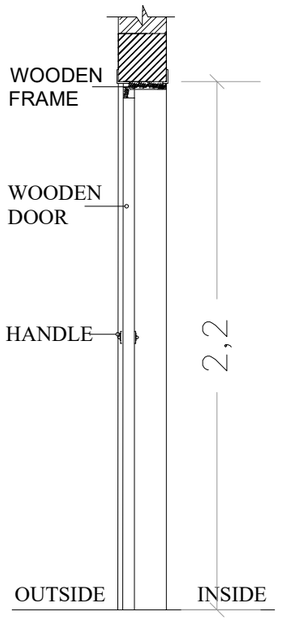

SECTION A-A

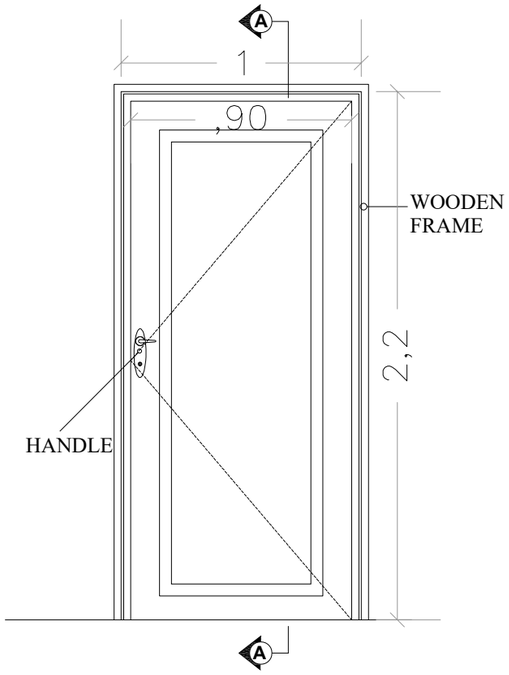

OUTER ELEVATION

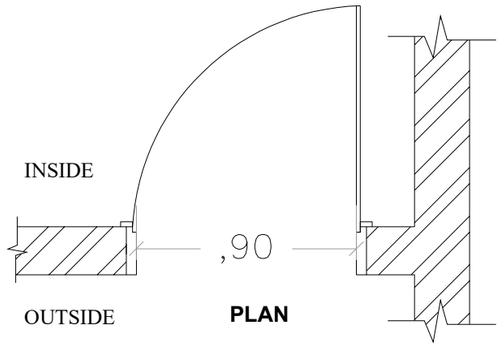

PLAN

D1 - (1.00m X 2.20m)

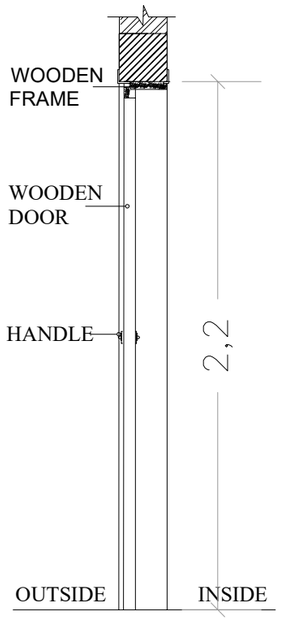

SECTION B-B

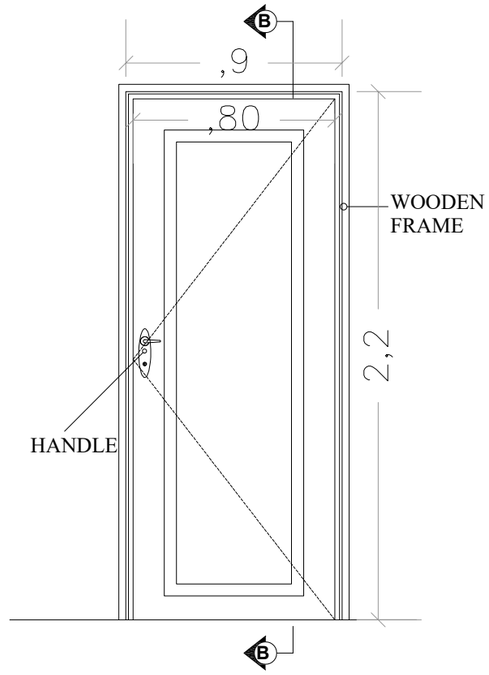

OUTER ELEVATION

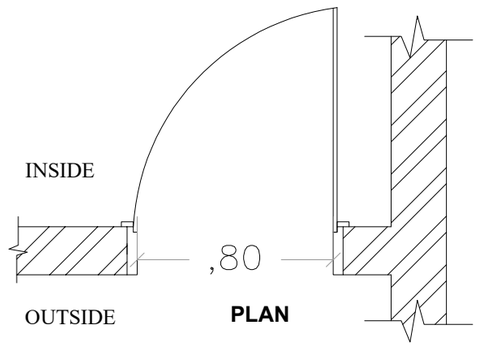

PLAN

D2 - (0.90m X 2.20m)

United Nations Development Programme (UNDP)	
Project:	A New Building Replacing UNDSS Old Building
Location:	Sana'a- Yemen
Drawing Title:	Doors Details
Design By :	UNDP Engineering Unit
Drawing Type: Architecture	Status : Tender
Date: 13 April 2022	Drawing No. 12

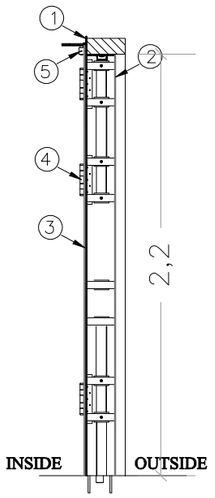

SECTION C-C

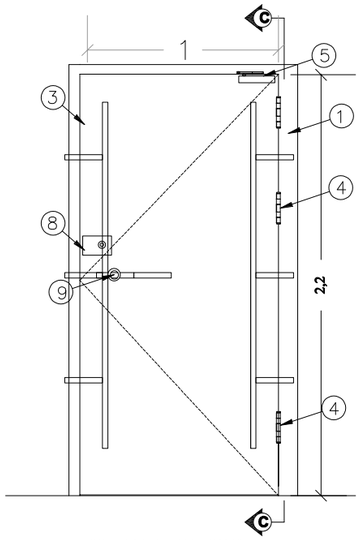

INTER ELEVATION

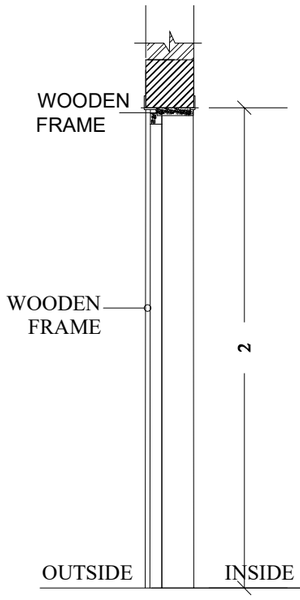

SECTION D-D

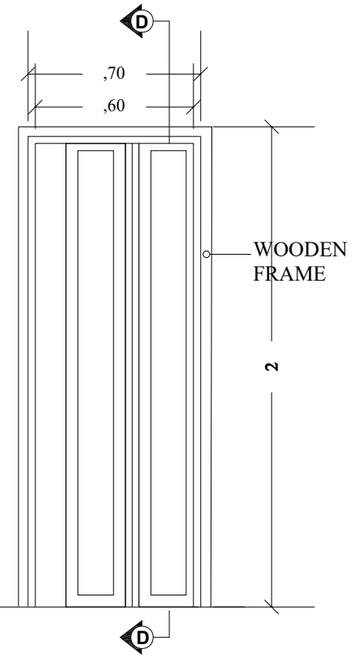

OUTER ELEVATION

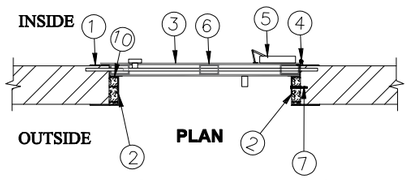

D3 - (1.00m X 2.20m)

1. Blast-Resistant External Frame size 10 cm X50cm X6mm X 2.
2. Blast-Resistant Internal Frame size 50 X100 X3mm.
3. Steel door full metal plate 8 mm two sides (16mm thickness).
4. 45mm *150mm *3 Heavy Weight Hinge / Welded Knuckles / reinforced by steel plate from/to door steel frame.
5. Door closer.
6. A Tube with size 50 mm *50 mm * 3 mm to distribute it each 40 cm horizontal and vertical.
7. Hex Bolt on Concrete Anchor size D 20mm* 20 cm* 6 in all directions
8. Electrical locked.
9. Manual lock inside 3* 400mm*30mm *2 in both side with handle and covering the grooves by plate 4mm.
10. Four side sealing strip smoke protection.
11. *Handles with steel pipe 1 in Dia*

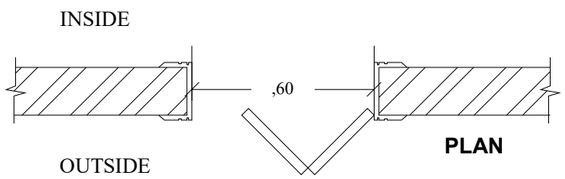

D5 - (0.70m X 2.00m)

United Nations Development Programme (UNDP)	
Project:	A New Building Replacing UNDSS Old Building
Location:	Sana'a- Yemen
Drawing Title:	Doors Details
Design By :	UNDP Engineering Unit
Drawing Type: Architecture	Status : Tender
Date: 13 April 2022	Drawing No. 13

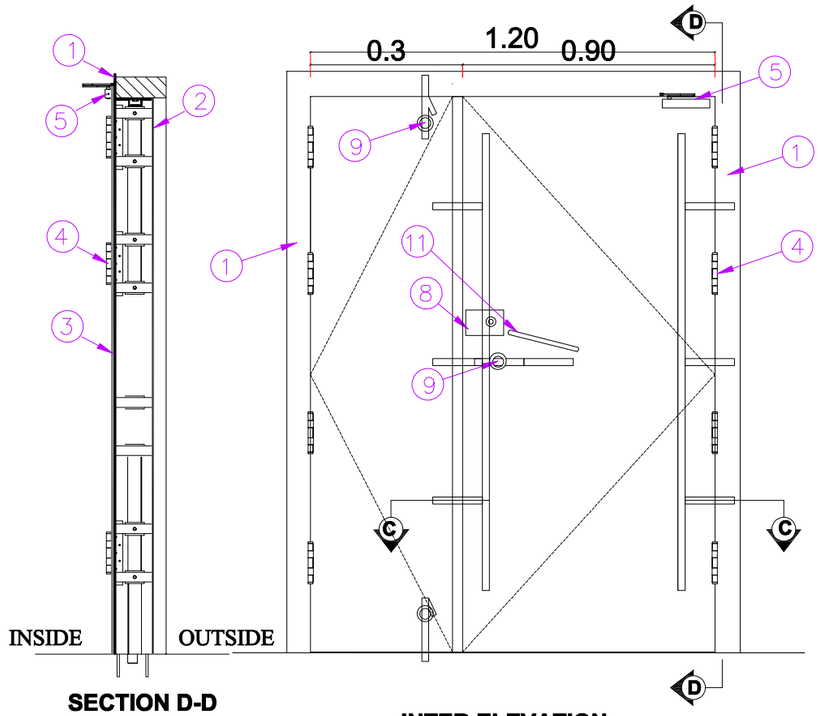

SECTION D-D

INTER ELEVATION

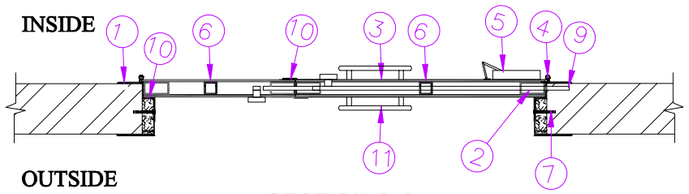

SECTION C-C

D6 -1.5x2.5m

1. Blast-Resistant External Frame size 10 cm X50 cm X6mm X 2.
2. Blast-Resistant Internal Frame size 50 X100 X3mm.
3. Steel door full metal plate 8 mm two sides (16mm thickness).
4. 45mm *150mm *8 Heavy Weight Hinge / Welded Knuckles / reinforced by steel plate from/to steel frame.
5. door closer.
6. A Tube with size 50 mm *50 mm * 3 mm to distribute it each 40 cm horizontal and vertical.
7. Hex Bolt on Concrete Anchor size D 20mm* 20 cm* 6 in all directions each 25 cm.
8. Electrical locked.
9. Manual lock inside 3* 400mm*30mm *2 in both side.
10. Four side sealing strip smoke protection.
11. *Handles with pipe 1 in Dia.*
12. *Glass with 4 cm thickness*

United Nations Development Programme (UNDP)	
Project:	A New Building Replacing UNDSS Old Building
Location:	Sana'a- Yemen
Drawing Title:	Doors Details
Design By :	UNDP Engineering Unit
Drawing Type: Architecture	Status : Tender
Date: 13 April 2022	Drawing No. 14

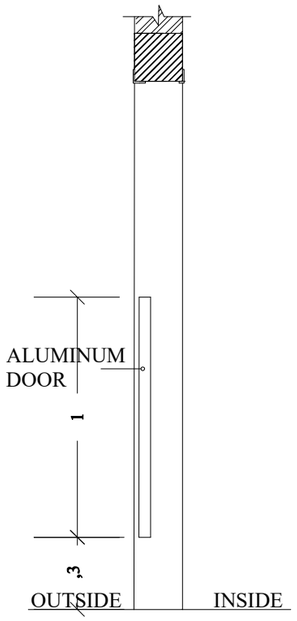

SECTION F-F

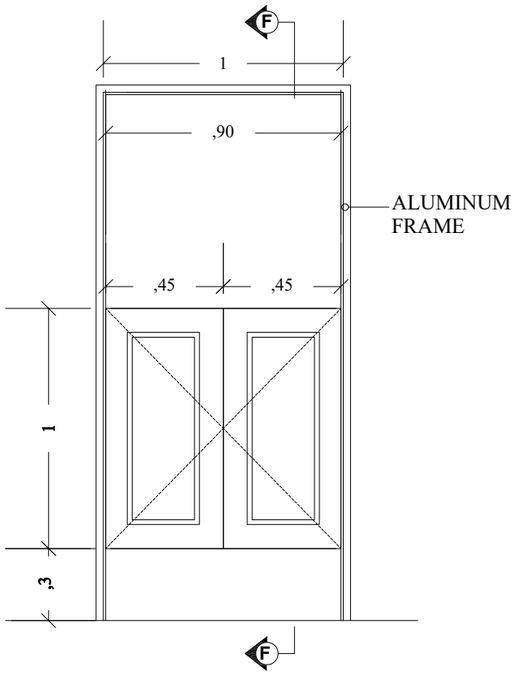

OUTER ELEVATION

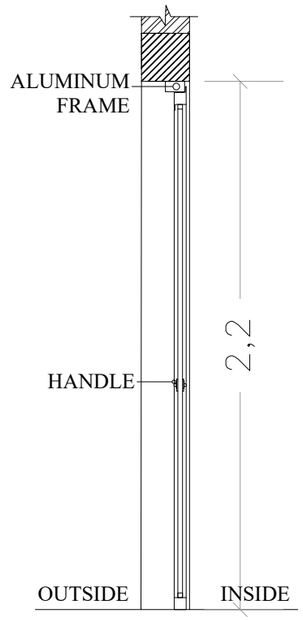

SECTION G-G

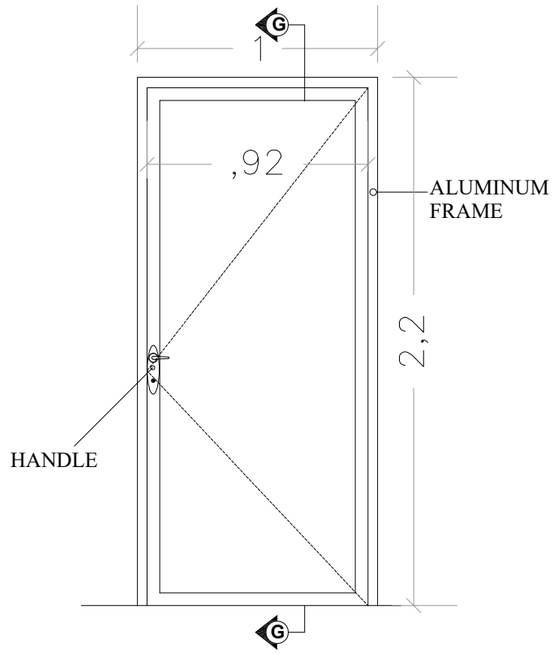

INTER ELEVATION

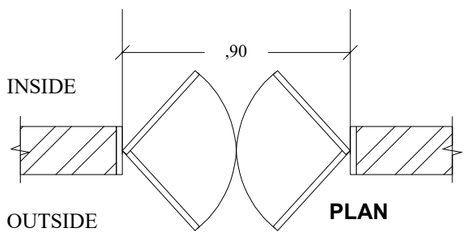

PLAN

D7 - (1.00m X 1.00m)

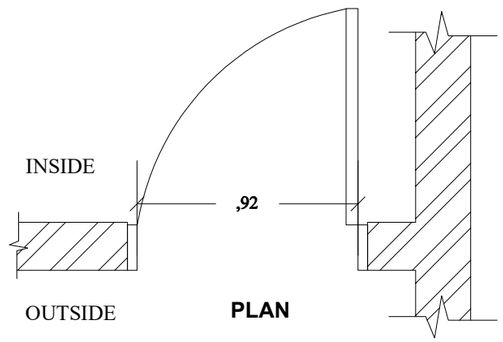

PLAN

D8 - (1.00m X 2.20m)

United Nations Development Programme (UNDP)	
Project:	A New Building Replacing UNDSS Old Building
Location:	Sana'a- Yemen
Drawing Title:	Doors Details
Design By :	UNDP Engineering Unit
Drawing Type: Architecture	Status : Tender
Date: 13 April 2022	Drawing No. 15

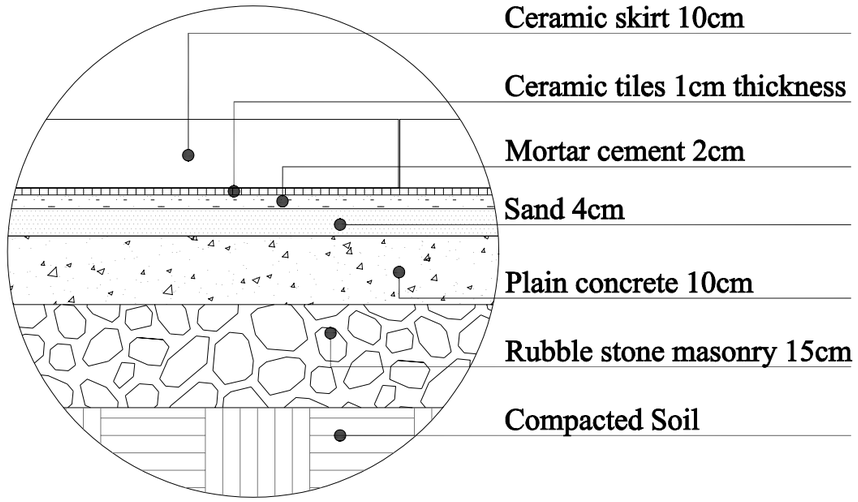

Floor Detail

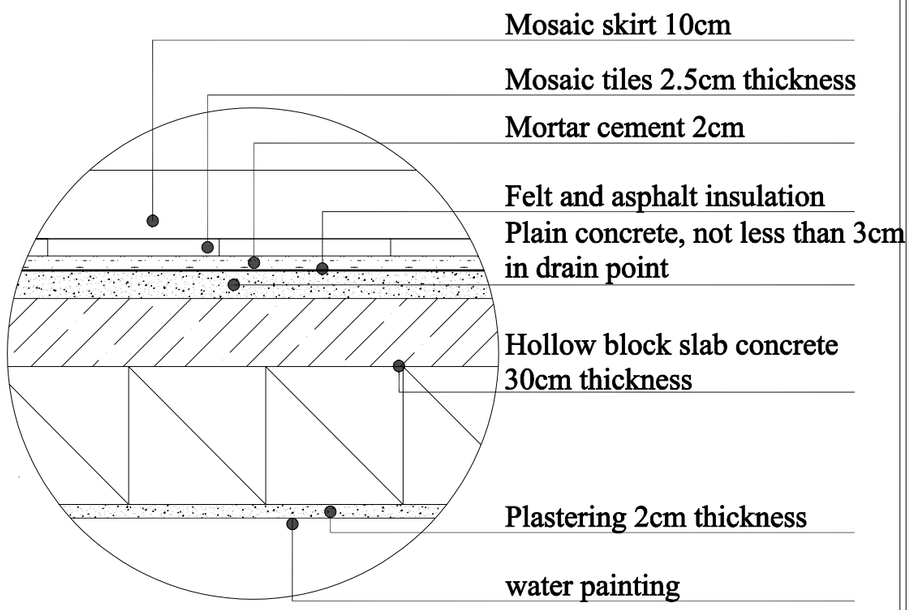

Roof Detail

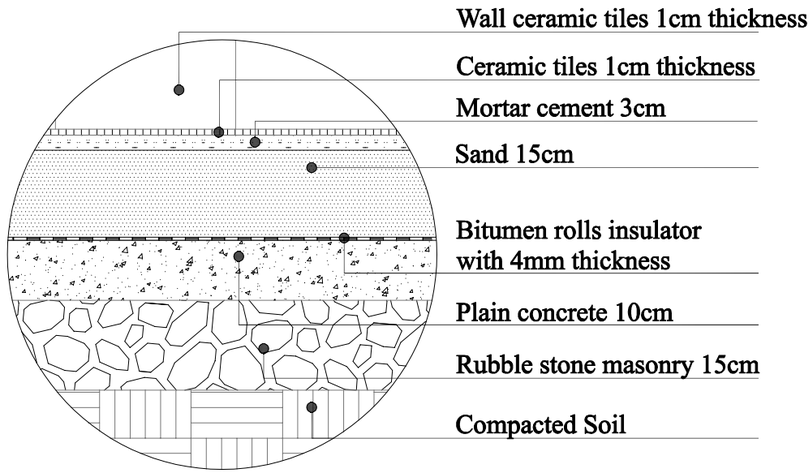

Bathroom Floor Detail

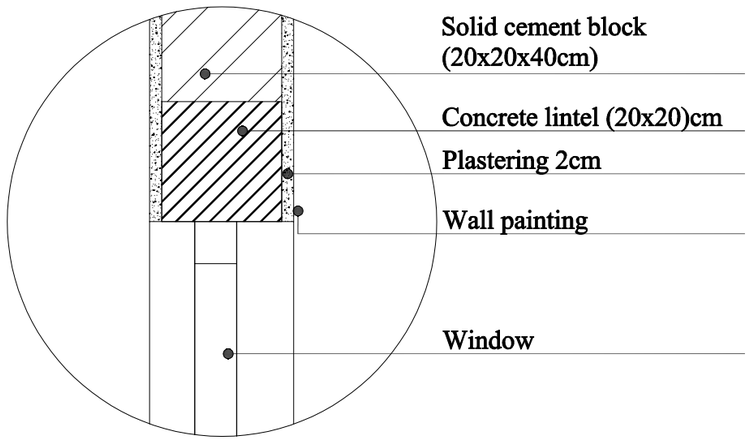

Wall Detail

United Nations Development Programme (UNDP)	
Project: A New Building Replacing UNDSS Old Building	
Location: Sana'a- Yemen	
Drawing Title: Details	
Design By : UNDP Engineering Unit	
Drawing Type: Architecture	Status : Tender
Date: 13 April 2022	Drawing No. 16

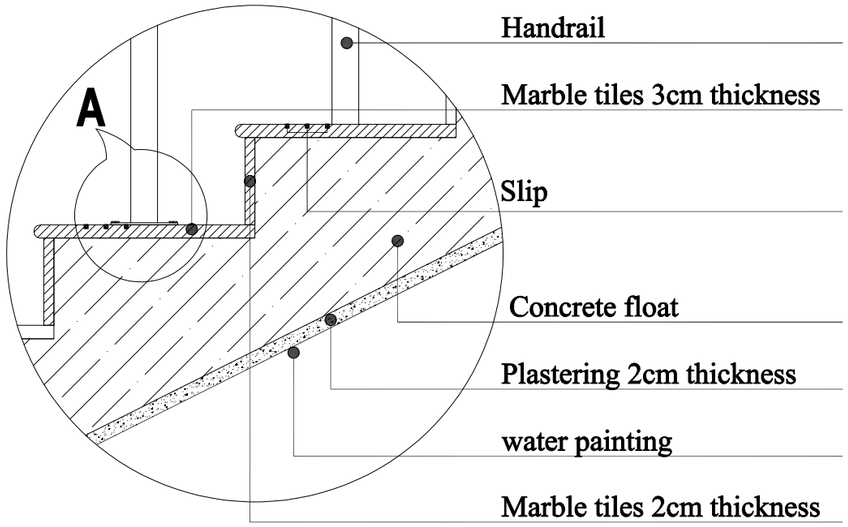

Stairs Detail

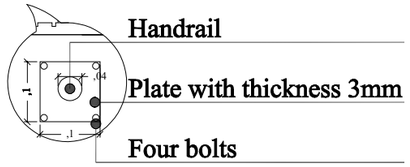

Detail (A)

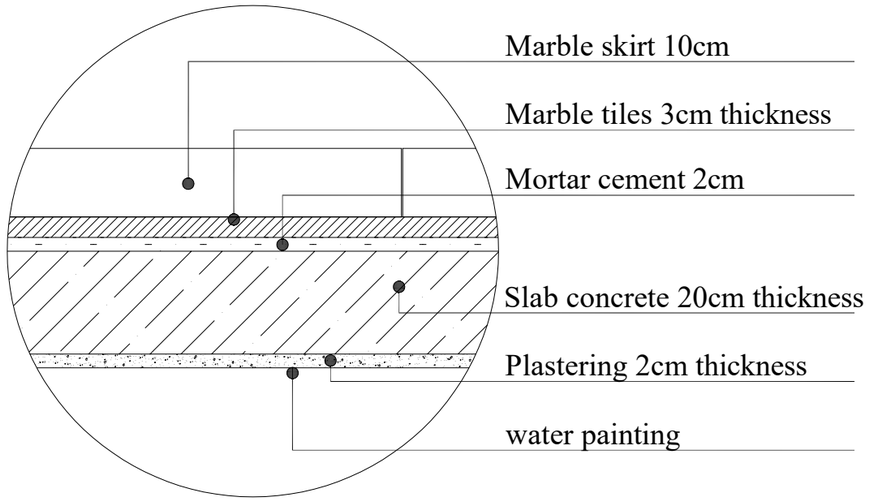

Stair Landing Detail

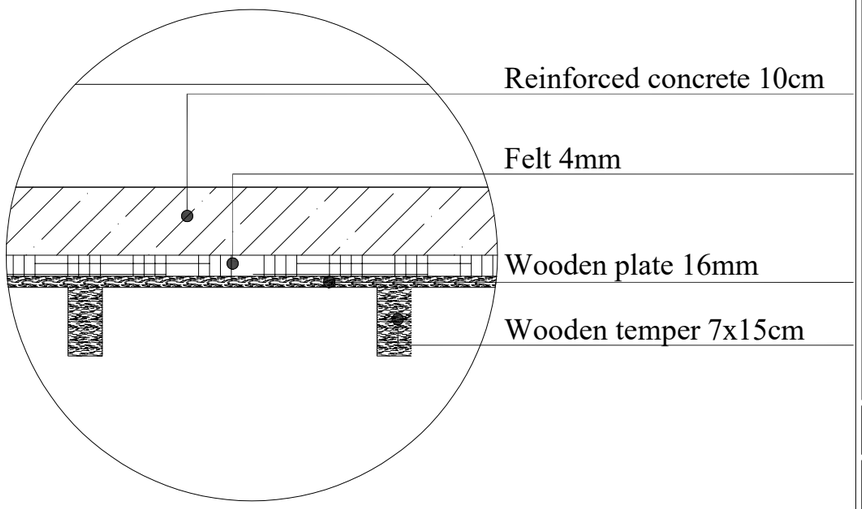

Stairs Roof Detail

United Nations Development Programme (UNDP)	
Project: A New Building Replacing UNDSS Old Building	
Location: Sana'a- Yemen	
Drawing Title: Details	
Design By : UNDP Engineering Unit	
Drawing Type: Architecture	Status : Tender
Date: 13 April 2022	Drawing No. 17

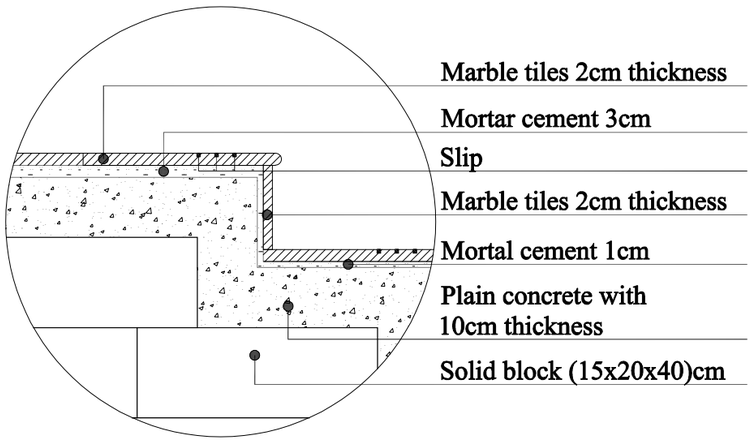

Entrance Stairs Detail

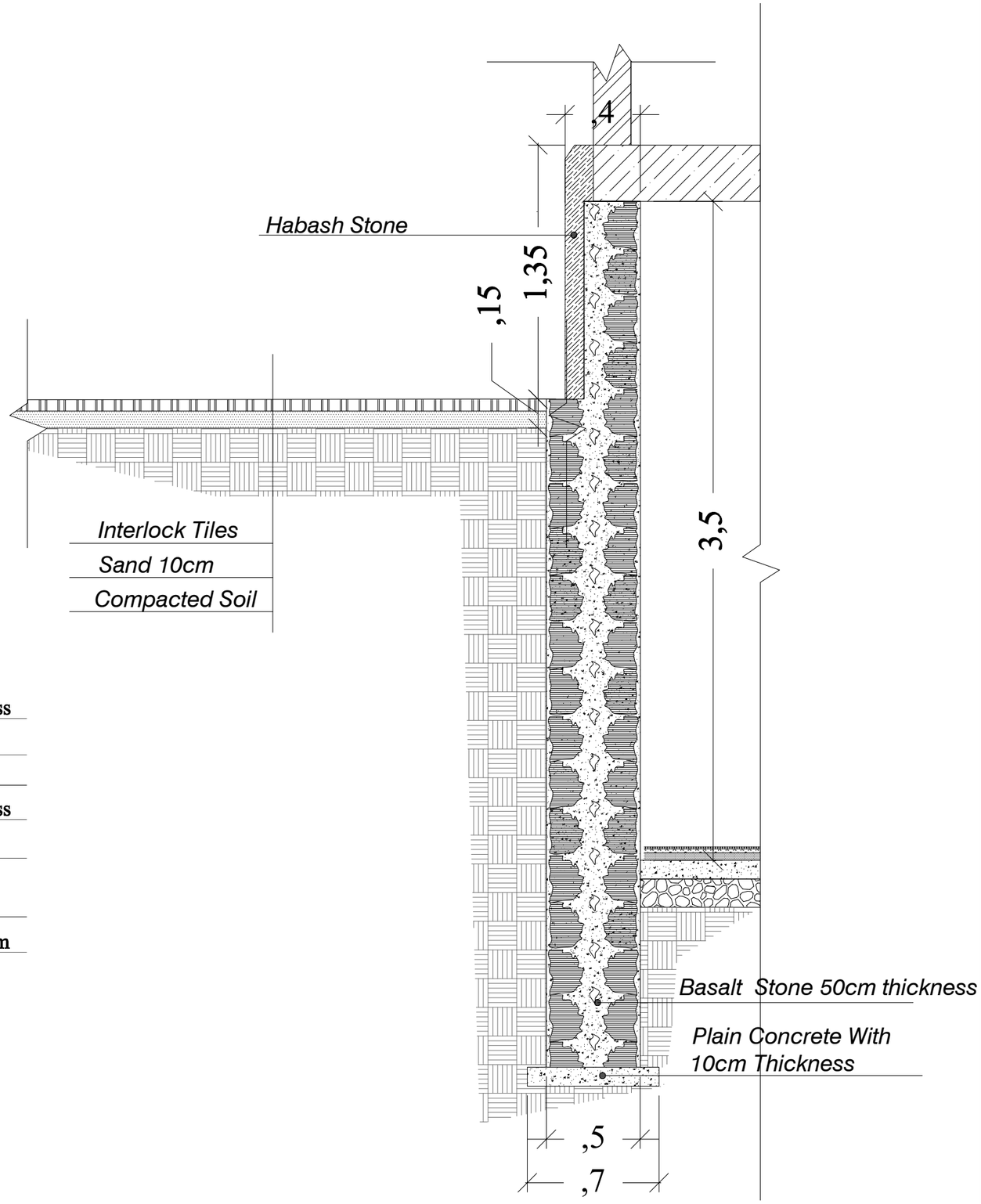

Basement wall Detail

United Nations Development Programme (UNDP)	
Project: A New Building Replacing UNDSS Old Building	
Location: Sana'a- Yemen	
Drawing Title: Details	
Design By : UNDP Engineering Unit	
Drawing Type: Architecture	Status : Tender
Date: 13 April 2022	Drawing No. 18

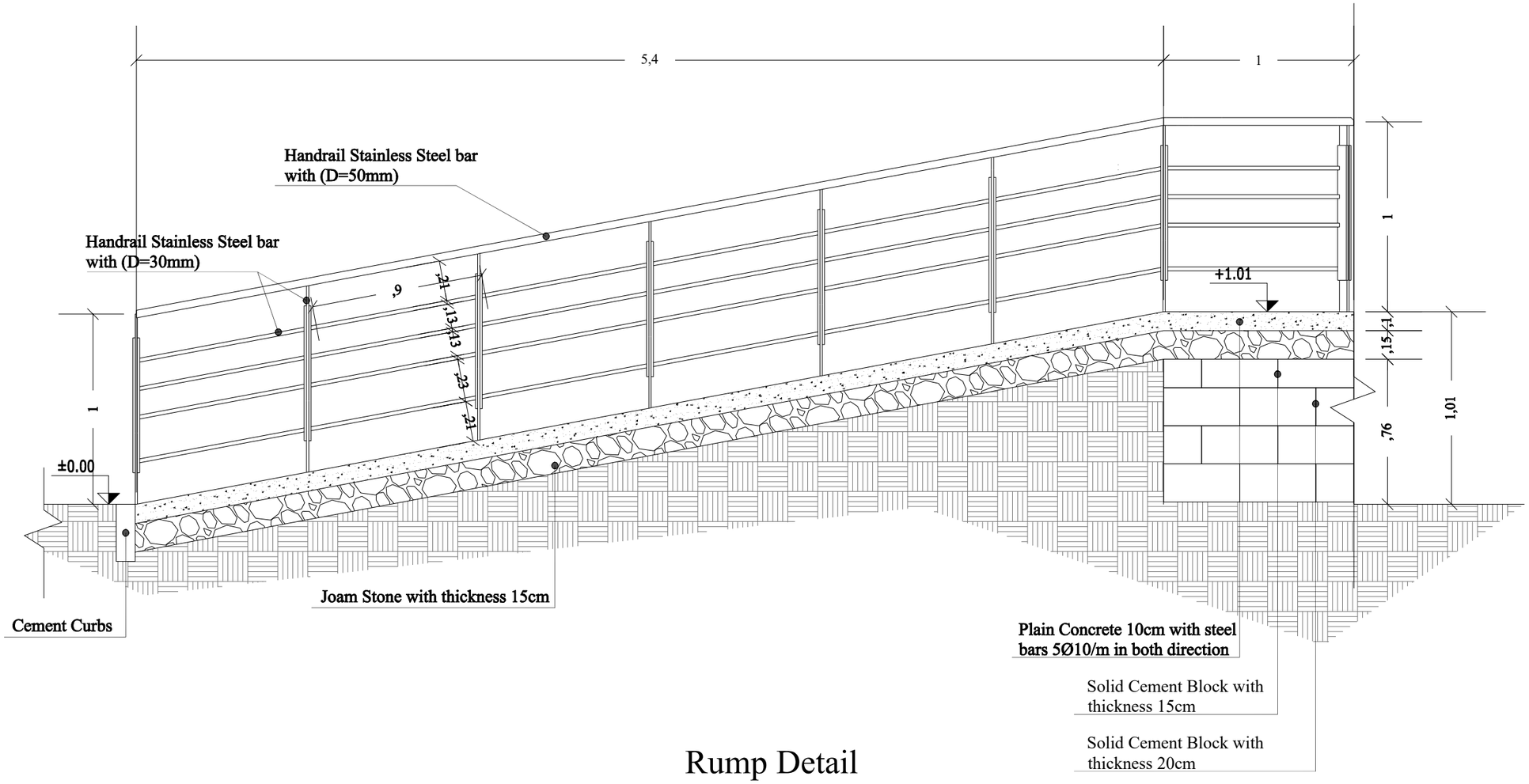

Rump Detail

United Nations Development Programme (UNDP)	
Project:	A New Building Replacing UNDSS Old Building
Location:	Sana'a- Yemen
Drawing Title:	Details
Design By :	UNDP Engineering Unit
Drawing Type: Architecture	Status : Tender
Date: 13 April 2022	Drawing No. 19

United Nations Development Programme (UNDP)

Project: A New Building Replacing UNDSS Old Building

Location: Sana'a- Yemen

Drawing Title: Prespeective

Design By : UNDP Engineering Unit

Drawing Type: Architecture

Status : Tender

Date: 13 April 2022

Drawing No. 20

United Nations Development Programme (UNDP)

Project: A New Building Replacing UNDSS Old Building

Location: Sana'a- Yemen

Drawing Title: Prespeective

Design By : UNDP Engineering Unit

Drawing Type: Architecture

Status : Tender

Date: 13 April 2022

Drawing No. 21

United Nations Development Programme (UNDP)

Project: A New Building Replacing UNDSS Old Building

Location: Sana'a- Yemen

Drawing Title: Prespeective

Design By : UNDP Engineering Unit

Drawing Type: Architecture

Status : Tender

Date: 13 April 2022

Drawing No. 22

United Nations Development Programme (UNDP)

Project: A New Building Replacing UNDSS Old Building

Location: Sana'a- Yemen

Drawing Title: Prespeective

Design By : UNDP Engineering Unit

Drawing Type: Architecture

Status : Tender

Date: 13 April 2022

Drawing No. 23

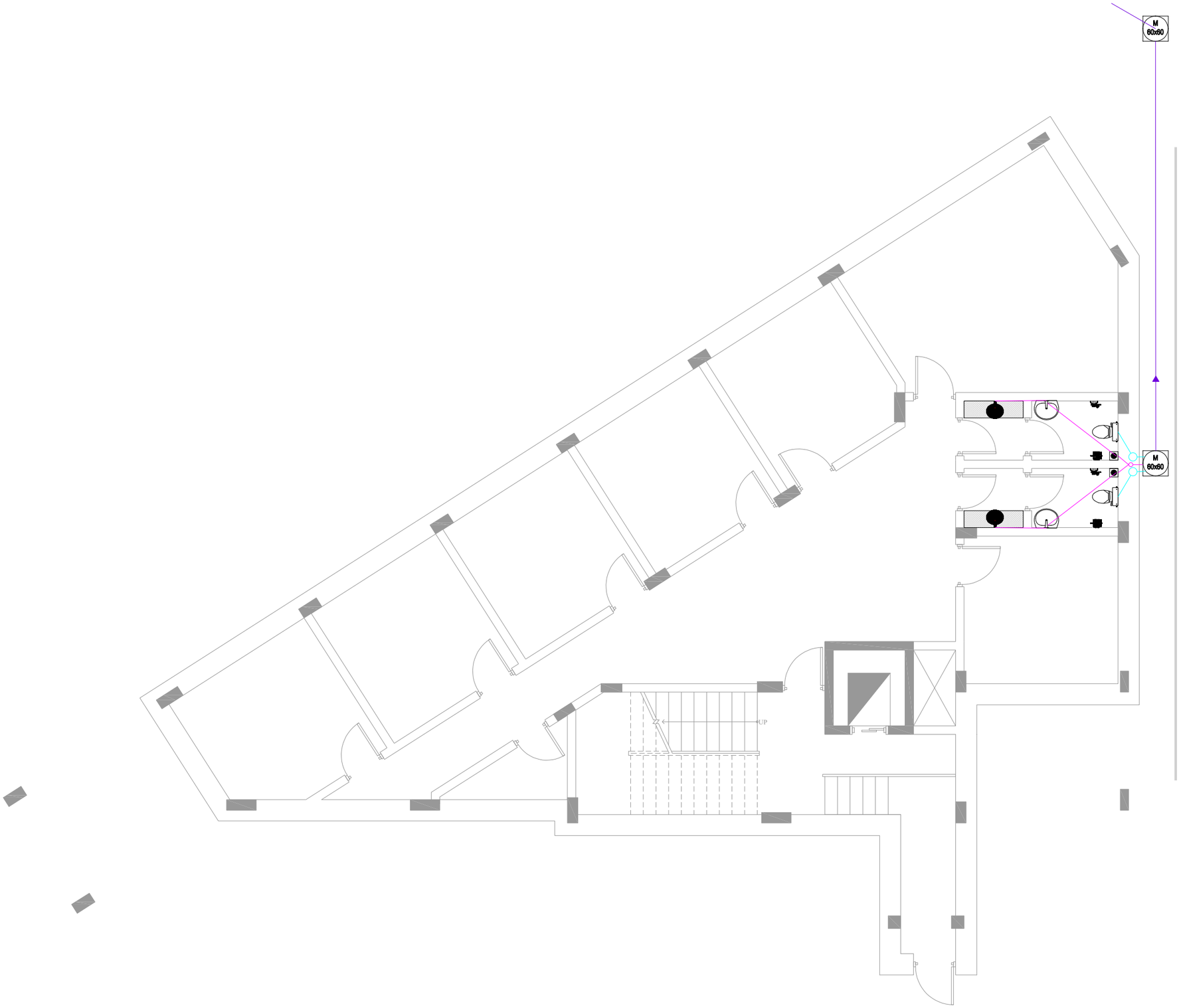

SYMBOL	DESCRIPTION
M	Manhole
	Wash Basin
	Commodes Toilet
	Wash Basin
	Floor Trap
	HAND-HELD SPRAYER
	Paper Holder
	Sink
	White Carrara or equivalent tiles
	HORIZONTAL PIPE 4IN
	HORIZONTAL PIPE 2IN
	HORIZONTAL PIPE 6IN
	Vertical PIPE 4IN
	Vertical PIPE 2IN

United Nations Development Programme (UNDP)

Project: *A New Building Replacing UNDSS Old Building*

Location: *Sana'a- Yemen*

Drawing Title: *Plumping Work for Basement*

Design By : *UNDP Engineering Unit*

Drawing Type: Architecture

Status : *Tender*

Date: *13 April 2022*

Drawing No. 24

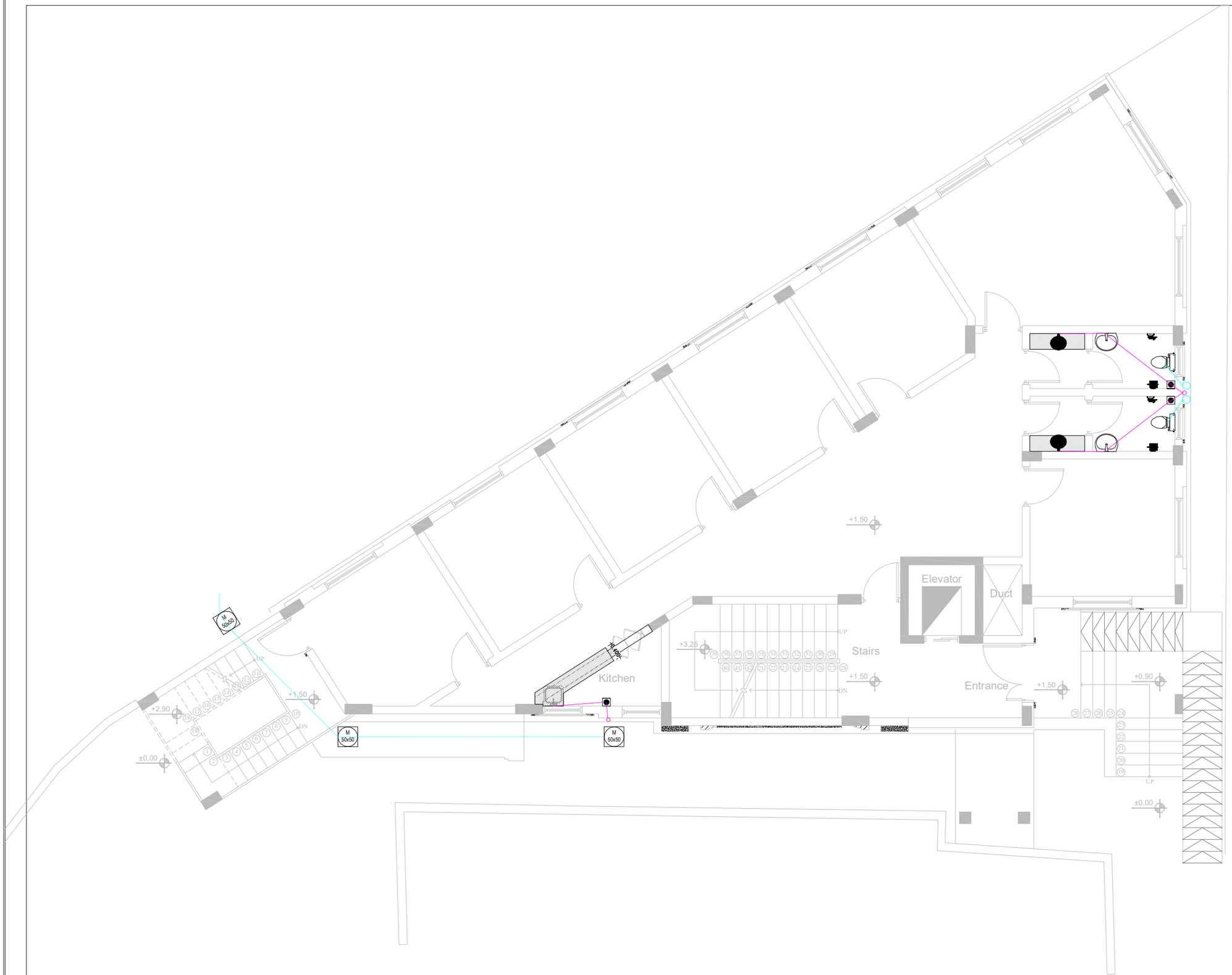

SYMBOL	DESCRIPTION
M	Manhole
	Wash Basin
	Commodes Toilet
	Wash Basin
	Floor Trap
	HAND-HELD SPRAYER
	Paper Holder
	Sink
	White Carrara or equivalent tiles
	HORIZONTAL PIPE 4IN
	HORIZONTAL PIPE 2IN
	HORIZONTAL PIPE 6IN
	Vertical PIPE 4IN
	Vertical PIPE 2IN

United Nations Development Programme (UNDP)

Project: *A New Building Replacing UNDSS Old Building*

Location: *Sana'a- Yemen*

Drawing Title: *Plumping Work for Basement*

Design By : *UNDP Engineering Unit*

Drawing Type: Architecture

Status : *Tender*

Date: *13 April 2022*

Drawing No. 25

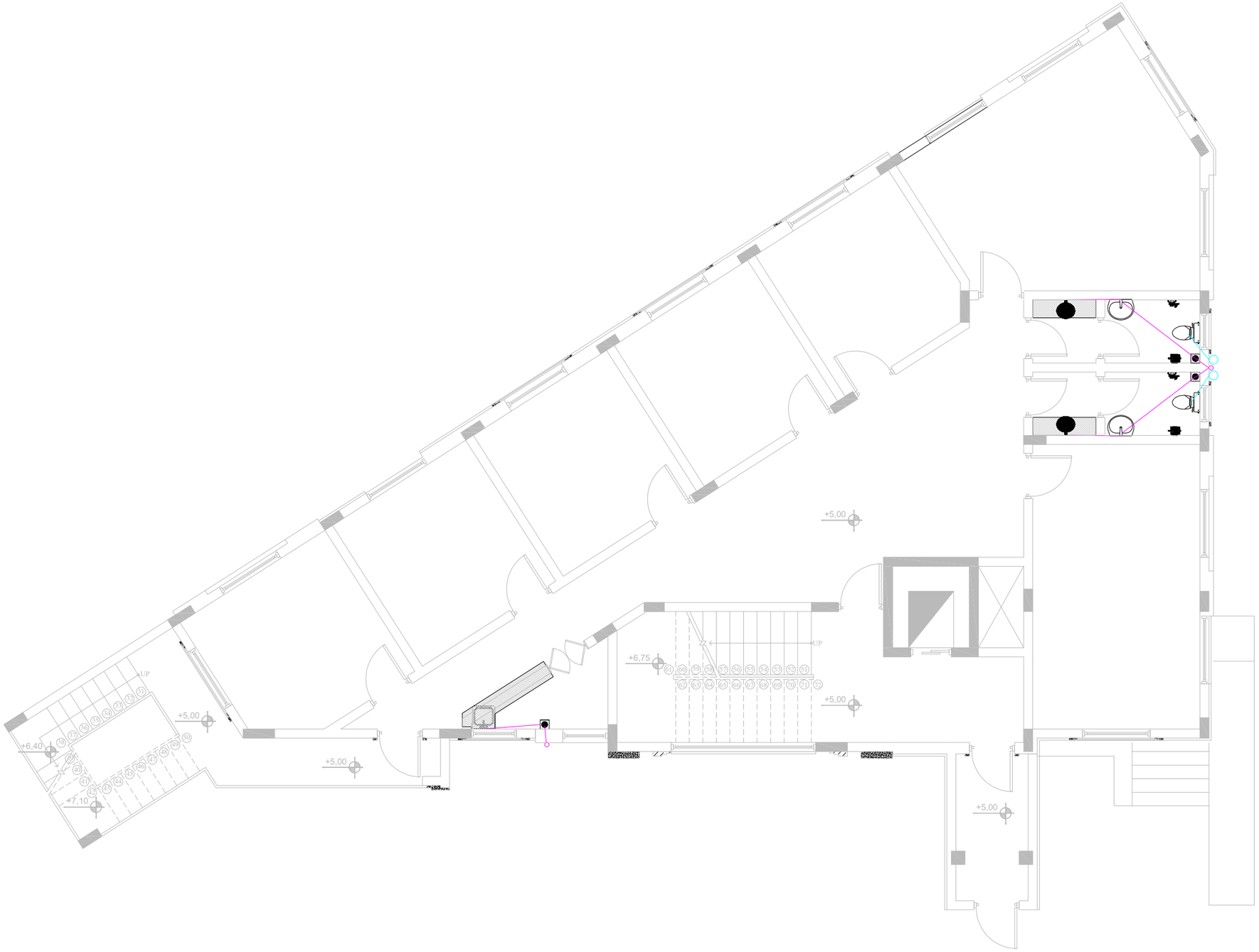

SYMBOL	DESCRIPTION
M	Manhole
	Wash Basin
	Commodes Toilet
	Wash Basin
	Floor Trap
	HAND-HELD SPRAYER
	Paper Holder
	Sink
	White Carrara or equivalent tiles
	HORIZONTAL PIPE 4IN
	HORIZONTAL PIPE 2IN
	HORIZONTAL PIPE 6IN
	Vertical PIPE 4IN
	Vertical PIPE 2IN

United Nations Development Programme (UNDP)

Project: *A New Building Replacing UNDSS Old Building*

Location: *Sana'a- Yemen*

Drawing Title: *Plumping Work for Typical Floors*

Design By : *UNDP Engineering Unit*

Drawing Type: Architecture

Status : *Tender*

Date: *13 April 2022*

Drawing No. 26

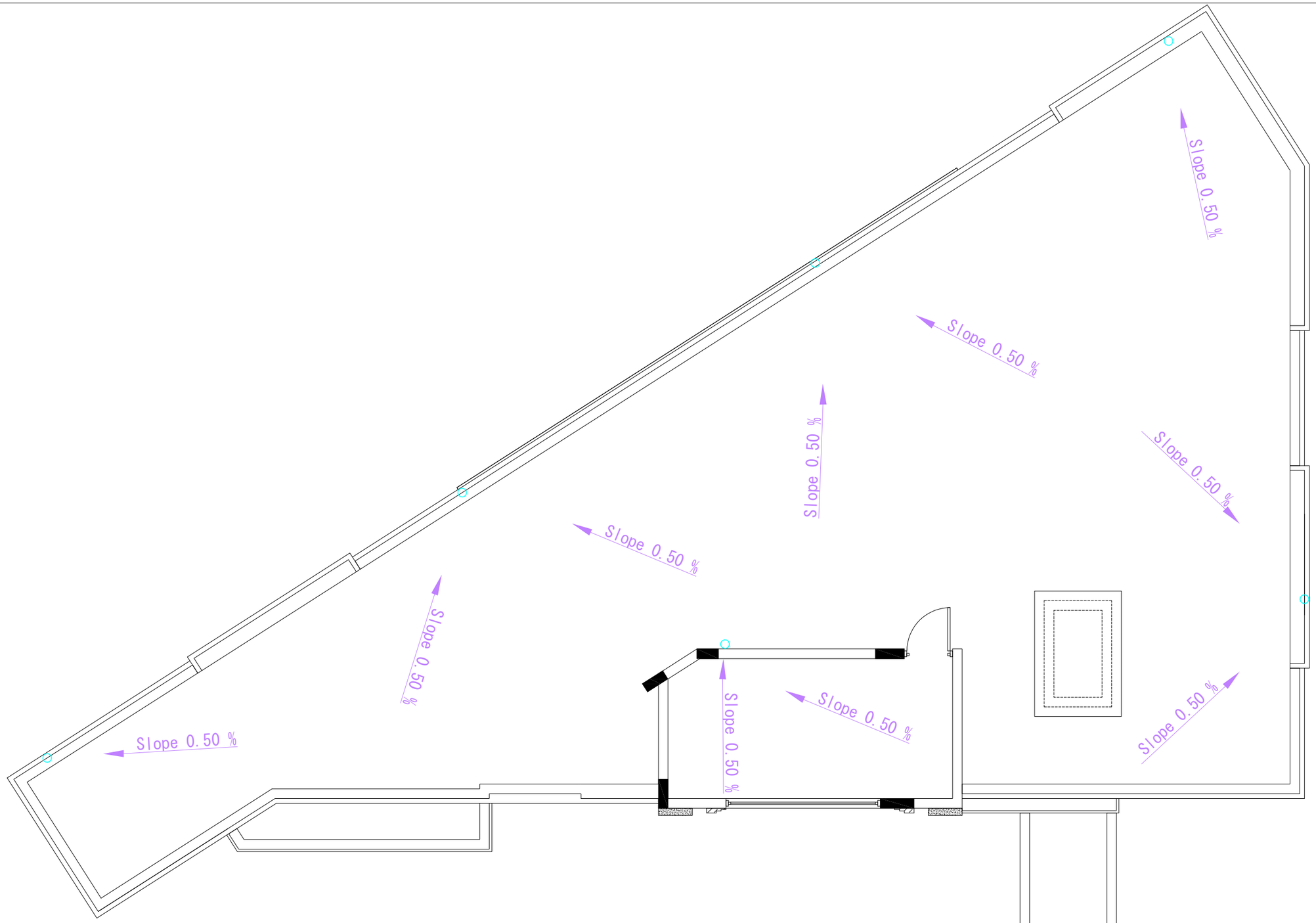

United Nations Development Programme (UNDP)

Project: A New Building Replacing UNDSS Old Building

Location: Sana'a- Yemen

Drawing Title: Drainage for Rainwater

Design By : UNDP Engineering Unit

Drawing Type: Architecture

Status : Tender

Date: 13 April 2022

Drawing No. 27

DRAWINGS :

- STRUCTURAL DRAWINGS SHALL BE READ IN CONJUNCTION WITH THE PERTINENT ARCHITECTURAL, ELECTRICAL, MECHANICAL, SANITARY AND OTHER STRUCTURAL DRAWINGS.
- REFERENCE TO BE MADE TO ARCHITECTURAL DRAWINGS FOR LOCATIONS AND DIMENSIONS OF FLOOR OPENINGS IN R.C. MEMBERS. THESE OPENINGS SHALL BE COORDINATED WITH THOSE SHOWN ON STRUCT'L, MECHA'L, AND ELECT'L DWGS.
- DO NOT SCALE FROM THE DRAWINGS, ALL DIMENSIONS SHALL BE READ FROM DRAWINGS OR COMPUTED.
- UNLESS OTHERWISE INDICATED ON DRAWINGS ALL DIMENSIONS AND ELEVATIONS ARE IN m.REINFORCING BARS SIZES ARE IN mm.
- ANY POSSIBLE CHANGES TO SLEEVES OR OPENINGS IN STRUCTURAL ELEMENTS OTHER THAN SHOWN ON STRUCTURAL DWG'S MUST BE REPORTED TO THE STRUCTURAL ENGINEERS FOR VERIFICATION AND APPROVAL.
- FOR EXACT LOCATIONS AND DIMENSIONS OF OPENINGS IN FLOOR SLABS,REFER TO ARCHITECTURAL DRAWINGS.
- ALL SECTIONS MUST BE COORDINATED WITH ARCHITECTURAL DRAWINGS BEFORE ERECTION OF FORMWORK. ANY DISCREPANCY MUST BE BROUGHT TO THE NOTICE OF THE ENGINEER FOR CLARIFICATION.
- FOUNDATION MUST BE PLACED AT THE LEVEL INDICATED ON THE DRAWINGS & ON UNDISTURBED GROUND. ANY DISTURBED SOIL MUST BE REPLACED WITH BLINDING CONCRETE.
- CONSTRUCTION LOADS SHALL NOT EXCEED THE DESIGN LIVE LOAD PER SQUARE METER,PROVIDE ADEQUATE SHORING AND/OR BRACING WHERE STRUCTURE HAS NOT ATTAINED DESIGN STRENGTH.
- BACKFILL AND FILL NEXT TO FOOTINGS, FOUNDATIONS, UNDER SUBFLOORS, etc. SHALL BE AS APPROVED BY THE ENGINEER AND SHALL BE LAID IN LAYERS NOT EXCEEDING 25cm. THICK AND COMPACTED BY MECHANICAL TAMPERS OR AS APPROVED BY THE ENGINEER.
- CONCRETE IN PARKING FLOORS AND DRIVEWAY RAMPS SHOULD BE CAST TO THE LEVELS INDICATED ON THE CIVIL DRAWINGS.

DESIGN CRITERIA :

1. DESIGN AND CONSTRUCTION ARE IN ACCORDANCE WITH THE ACI STANDARD BUILDING CODE REQUIREMENTS FOR REINFORCED CONCRETE STRUCTURES (ACI 318M-14), & UNIFORM BUILDING CODE (UBC 97) & ASTM.

CONCRETE:

Concrete mixture ingredients shall conform to the Specifications in the table:

Concrete Materials Specifications	
Mixture Ingredients	**Specifications**
Portland Cement	ASTM C150M
Aggregates	ASTM C33M
Water	ASTM C1602M
Water reduction & setting time modification admixtures	ASTM C494M
Producing flowing concrete admixtures	ASTM C1017M
Air entrainment admixtures	ASTM C260M

concrete Production :

- Equipment for mixing and transporting concrete shall conform to Astm c94m or astm c685m.
- ready-mixed and site mixed concrete shall be batched,mixed,and delivered in accordance with astm c94m or astm c685m.

PREPARATION OF EQUIPMENT AND PLACE OF DEPOSIT

Preparation before concrete placement shall include the following:

- All equipment for mixing and transporting concrete shall be clean;
- Forms shall be properly coated;
- Masonry filler units that will be in contact with concrete shall be well drenched;
- Reinforcement shall be thoroughly clean of corrosion.
- Water shall be removed from place of deposit before concrete is placed.

MIXING OF CONCRETE

- All concrete shall be mixed until there is a uniform distribution of materials and shall be discharged completely before mixer is recharged.
- Ready-mixed concrete shall be mixed and delivered in accordance with requirements of Standard Specification for Ready-Mixed Concrete (ASTM C 94M) or Standard Specification for Concrete Made by Volumetric Batching and Continuous Mixing" (ASTM C 685M).

CONVEYING OF CONCRETE

- Concrete shall be conveyed from mixer to place of final deposit by methods that will prevent separation or loss of materials.
- Conveying equipment shall be capable of providing a supply of concrete at site of placement without separation of ingredients and without interruptions sufficient to permit loss of plasticity between successive increments.

DEPOSITING OF CONCRETE

- Concrete shall be deposited as nearly as practical in its final position to avoid segregation due to rehandling or flowing.
- Concreting shall be carried on at such a rate that concrete is at all times plastic and flows readily into spaces between reinforcement.
- Concrete that has partially hardened or been contaminated by foreign materials shall not be deposited in the structure.
- Retempered concrete or concrete that has been remixed after initial set shall not be used unless approved by the engineer.
- all concrete shall be thoroughly consolidated by suitable means during placement and shall be thoroughly worked around reinforcement and embedded fixtures and into corners of forms.

MINIMUM CLEAR CONCRETE COVER TO REINFORCING STEEL

CONCRETE COVER			
Concrete Exposure	Member	Reinforcement	Specified Cover (mm)
Cast against and permanently in contact with ground	All	All	75
Exposed to weather or in contact with ground	All	No. 19 through No. 57 bars	50
		No. 16 bar and smaller	40
Not Exposed to Weather or in contact with ground	Slabs,Joist,and Walls	No. 43 and No. 57 bars	40
		No. 36 bar and smaller	20
	Beams,Columns,Pedestals, and tension ties	Primary reinforcement,stirrup,ties,spirals,and hoops	40

CONCRETE CLASS FOR STRUCTURAL MEMBERS

Concrete Class For Structural Members	
Structural Member	28 day Cubical Strength fc'
Beams,Slabs,Stairs,and Ramps	30 Mpa
Columns & Walls	30 Mpa
Foundations	30 Mpa
Plain Concrete Under Foundations	20 Mpa

United Nations Development Programme (UNDP)

Project: A New Building Replacing UNDSS Old Building

Location: Sana'a- Yemen

Drawing Title: Mobilization Work

Design By : UNDP Engineering Unit

Drawing Type: Structure

Status : Tender

Date: 13 April 2022

Drawing No. 1

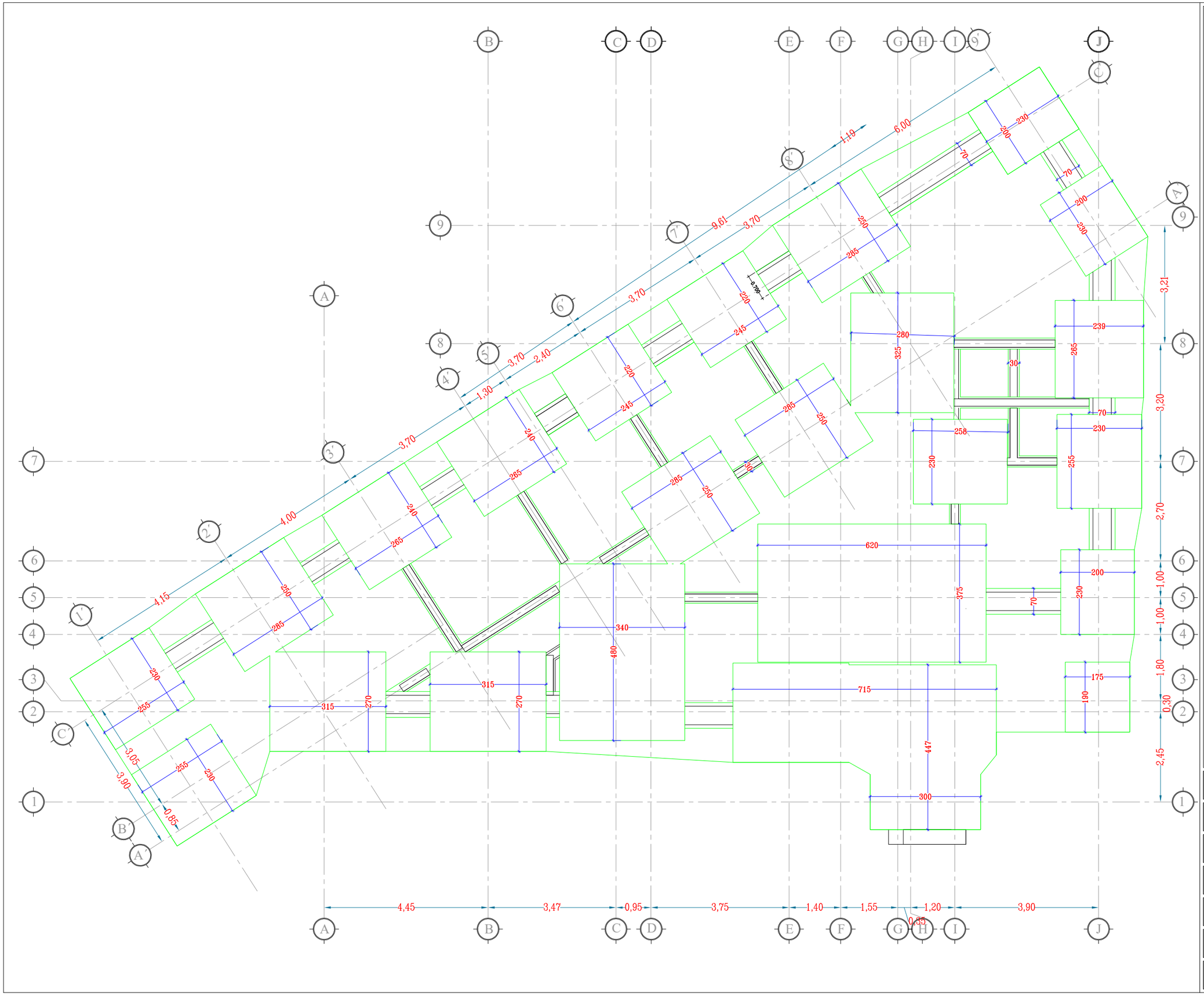

United Nations Development Programme (UNDP)	
Project: A New Building Replacing UNDSS Old Building	
Location: Sana'a- Yemen	
Drawing Title: Excavation	
Design By : UNDP Engineering Unit	
Drawing Type: Structure	Status : Tender
Date: 13 April 2022	Drawing No. 2

Table for Isolated Footing

Type	Name	Dimensions			Reinforcement Bars		Koabel		Quantities
		Width	Long	High	On short dir.	On long dir.	On short dir.	On long dir.	
		In cm	In cm	In cm	In mm	In mm	In mm	In mm	
isolated	F3	260	305	60	8 ø 16/m	8 ø 16/m	3 ø 14	2 ø 14	1
isolated	F4	250	295	60	8 ø 16/m	8 ø 16/m	3 ø 14	2 ø 14	3
isolated	F5	230	265	60	7 ø 16/m	7 ø 16/m	3 ø 14	2 ø 14	4
isolated	F6	220	245	50	7 ø 16/m	7 ø 16/m	3 ø 14	2 ø 14	3
isolated	F7	210	235	50	6 ø 16/m	6 ø 16/m	3 ø 14	2 ø 14	4
isolated	F8	200	225	50	7 ø 16/m	7 ø 16/m	3 ø 14	2 ø 14	3
isolated	F9	180	210	50	7 ø 16/m	7 ø 16/m	3 ø 14	2 ø 14	3
isolated	F10	155	170	40	7 ø 14/m	7 ø 14/m	3 ø 14	2 ø 14	1
isolated	F11	145	145	40	7 ø 14/m	7 ø 14/m	3 ø 14	2 ø 14	2
Total quantity									

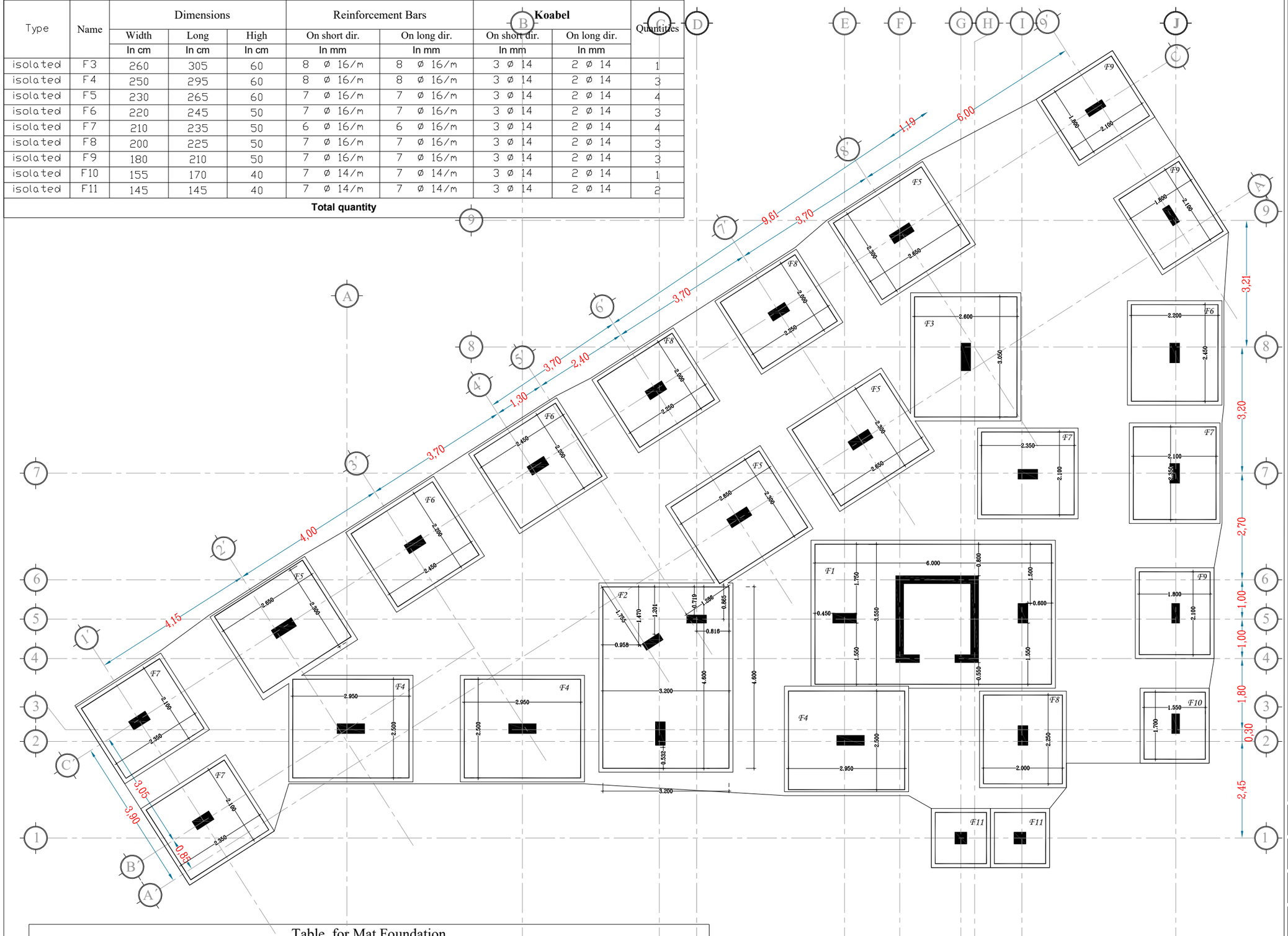

Table for Mat Foundation

Type	Name	Dimension			Reinforcement in Short Direction		Reinforcement in Long Direction		Quantities
		Width	Long	High	Bottom Rebar	Top Rebar	Bottom Rebar	Top Rebar	
		In cm	In cm	In cm	In mm	In mm	In mm	In mm	
Mat	F1	355	600	50	8 ø 16/m	6 ø 14/m	7 ø 14	6 ø 14	1
Mat	F2	320	460	50	8 ø 16/m	6 ø 14/m	7 ø 14	7 ø 14	1

NOTES:

1. ALL DIMENSIONS AND ELEVATIONS ARE IN CENTIMETERS AND METERS RESPECTIVELY, UNLESS OVER WISE MENTIONED.
2. FOUNDATION HAS BEEN DESIGNED FOR SOIL ALLOWABLE NET SOIL BEARING CAPACITY 200 KPA.
3. SUPPLIED STEEL REBAR SHALL CONFORM TO ASTM A-615M WITH MINIMUM YIELD STRESS OF 2800 KG/CM2.
4. CONCRETE COVER FOR REINFORCEMENT BARS SHALL BE 50MM.
5. ORDINARY PORTLAND CEMENT SHALL BE USED IN CONCRETE.
6. THE 28-DAY CYLINDRICAL CONCRETE STRENGTH SHALL BE A MINIMUM OF 300 KG/CM2 FOR REINFORCED CONCRETE AND 200 KG/CM2 FOR PLAIN CONCRETE.
7. THE MATERIALS ENCOUNTERED AT SITE ARE CONSIDERED SUITABLE FOR BACKFILLING. HOWEVER, SUCH MATERIALS SHALL BE FREE FROM ORGANIC MATTER OR SALTS. THEY SHALL NOT CONTAIN ROCKS OR LAMBS OVER 15 CM IN GREATEST DIMENSIONS AND NOT MORE THAN 12 PERCENT LARGER THAN 7 CM THE BACK FILLED MATERIALS SHALL BE SPREAD IN LIFTS NOT MOISTURE CONTENT AND COMPACTED TO A DRY DENSITY NOT LESS THAN 95 PERCENT OF THE MAXIMUM DRY DENSITY AS OBTAINED BY MODIFIED PROCTOR COMPACTION TEST. THIS TYPE OF BACKFILL IS NORMALLY COMPACTED BY TAMPING ROLLERS WHEN SPACE IS AVAILABLE OR BY HAND OR POWER IN CONFINED AREAS.

United Nations Development Programme (UNDP)

Project: A New Building Replacing UNDSS Old Building

Location: Sana'a- Yemen

Drawing Title: Footing

Design By : UNDP Engineering Unit

Drawing Type: Structure

Status : Tender

Date: 13 April 2022

Drawing No. 3

TABLE REINFORCEMENT FOR THE BEAMS

Symbol	Dimension		Reinforcement				Stirrup	
	Width (cm)	Height (cm)	Lower CON	Lower ADD ##	Upper CON	Upper ADD ←→	MID	EDGE
B1	20	50	3Ø16	2Ø16	3Ø16	2Ø18	1Ø8@20cm	1Ø8@12cm
HB1	50	30	4Ø16	------	2Ø16	4Ø18	1Ø8@13cm	1Ø8@13cm
HB2	50	30	6Ø16	3Ø18	3Ø16	3Ø18	1Ø8@13cm	1Ø8@8cm
HB3	50	30	4Ø16	2Ø16	3Ø16	3Ø18	1Ø8@13cm	1Ø8@8cm
HB4	70	30	6Ø16	3Ø18	6Ø16	3Ø18	2Ø8@13cm	2Ø8@13cm
HB5	30	30	4Ø16	------	2Ø16	3Ø16	1Ø8@13cm	1Ø8@13cm
HB6	40	30	4Ø16	3Ø16	3Ø16	3Ø16	1Ø8@13cm	1Ø8@10cm
HB7	20	30	3Ø16	------	2Ø16	------	1Ø8@13cm	1Ø8@13cm
HB8	30	30	3Ø16	------	2Ø16	------	1Ø8@13cm	1Ø8@13cm
HB9	60	30	7Ø18	------	6Ø16	------	2Ø10@15cm	2Ø10@15cm
HB10	40	30	5Ø14	------	5Ø14	------	1Ø8@13cm	1Ø8@13cm
B2	20	60	5Ø16	------	3Ø16	------	1Ø8@15cm	1Ø8@15cm
B3	20	60	4Ø16	------	3Ø16	------	1Ø8@15cm	1Ø8@15cm
GB1	25	50	3Ø16	------	3Ø16	------	1Ø8@15cm	1Ø8@15cm
GB2	20	50	3Ø14		3Ø14	------	1Ø8@15cm	1Ø8@15cm

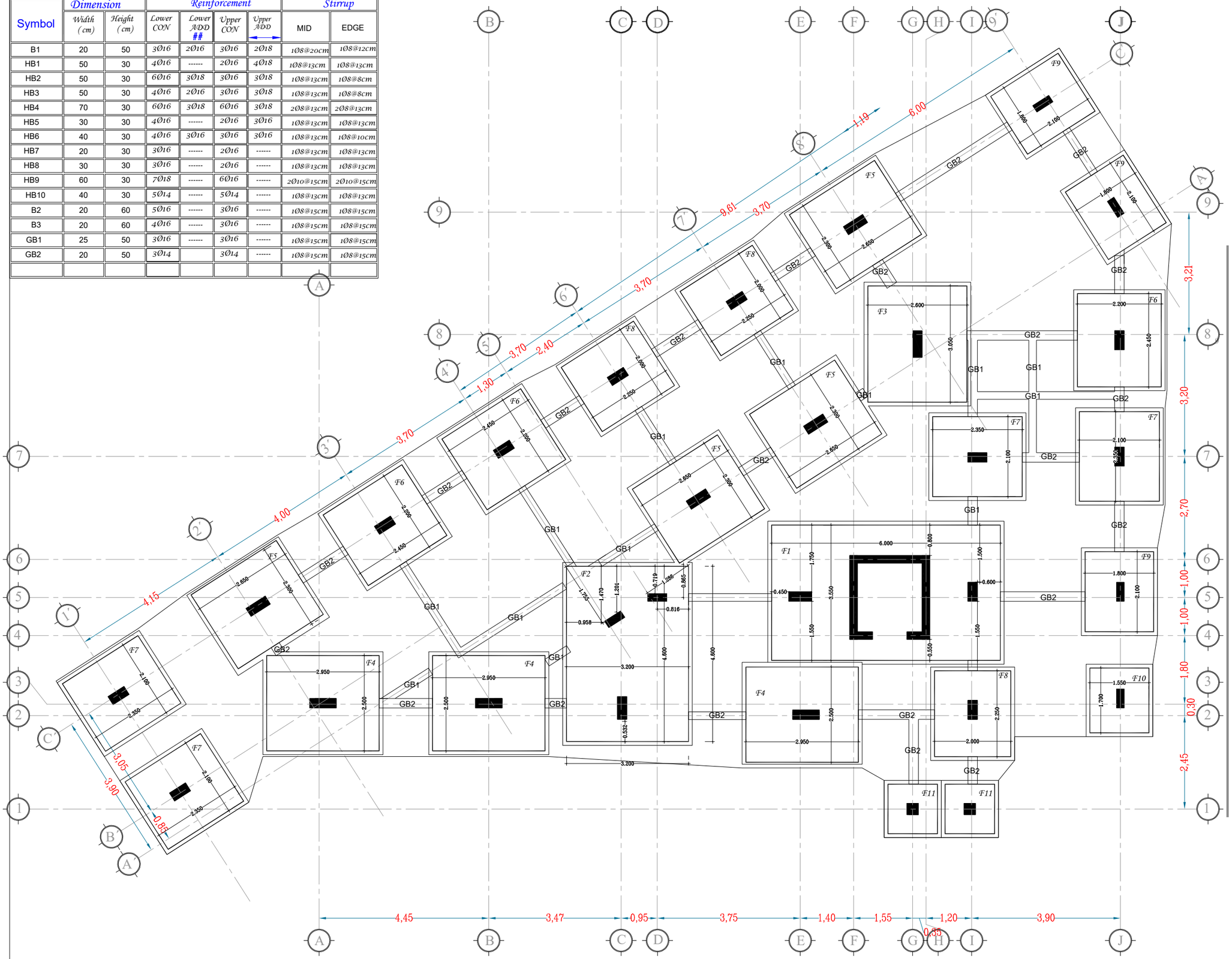

NOTES:

1. ALL DIMENSIONS AND ELEVATIONS ARE IN CENTIMETERS AND METERS RESPECTIVELY, UNLESS OVER WISE MENTIONED.
2. FOUNDATION HAS BEEN DESIGNED FOR SOIL ALLOWABLE NET SOIL BEARING CAPACITY 200 KPA.
3. SUPPLIED STEEL REBAR SHALL CONFORM TO ASTM A-615M WITH MINIMUM YIELD STRESS OF 2800 KG/CM2.
4. CONCRETE COVER FOR REINFORCEMENT BARS SHALL BE 50MM.
5. ORDINARY PORTLAND CEMENT SHALL BE USED IN CONCRETE.
6. THE 28-DAY CYLINDRICAL CONCRETE STRENGTH SHALL BE A MINIMUM OF 300 KG/CM2 FOR REINFORCED CONCRETE AND 200 KG/CM2 FOR PLAIN CONCRETE.
7. THE MATERIALS ENCOUNTERED AT SITE ARE CONSIDERED SUITABLE FOR BACKFILLING. HOWEVER, SUCH MATERIALS SHALL BE FREE FROM ORGANIC MATTER OR SALTS. THEY SHALL NOT CONTAIN ROCKS OR LAMBS OVER 15 CM IN GREATEST DIMENSIONS AND NOT MORE THAN 12 PERCENT LARGER THAN 7 CM THE BACK FILLED MATERIALS SHALL BE SPREAD IN LIFTS NOT MOISTURE CONTENT AND COMPACTED TO A DRY DENSITY NOT LESS THAN 95 PERCENT OF THE MAXIMUM DRY DENSITY AS OBTAINED BY MODIFIED PROCTOR COMPACTION TEST. THIS TYPE OF BACKFILL IS NORMALLY COMPACTED BY TAMPING ROLLERS WHEN SPACE IS AVAILABLE OR BY HAND OR POWER IN CONFINED AREAS.

United Nations Development Programme (UNDP)	
Project: A New Building Replacing UNDSS Old Building	
Location: Sana'a- Yemen	
Drawing Title: ground Beam	
Design By : UNDP Engineering Unit	
Drawing Type: Structure	Status : Tender
Date: 13 April 2022	Drawing No. 4

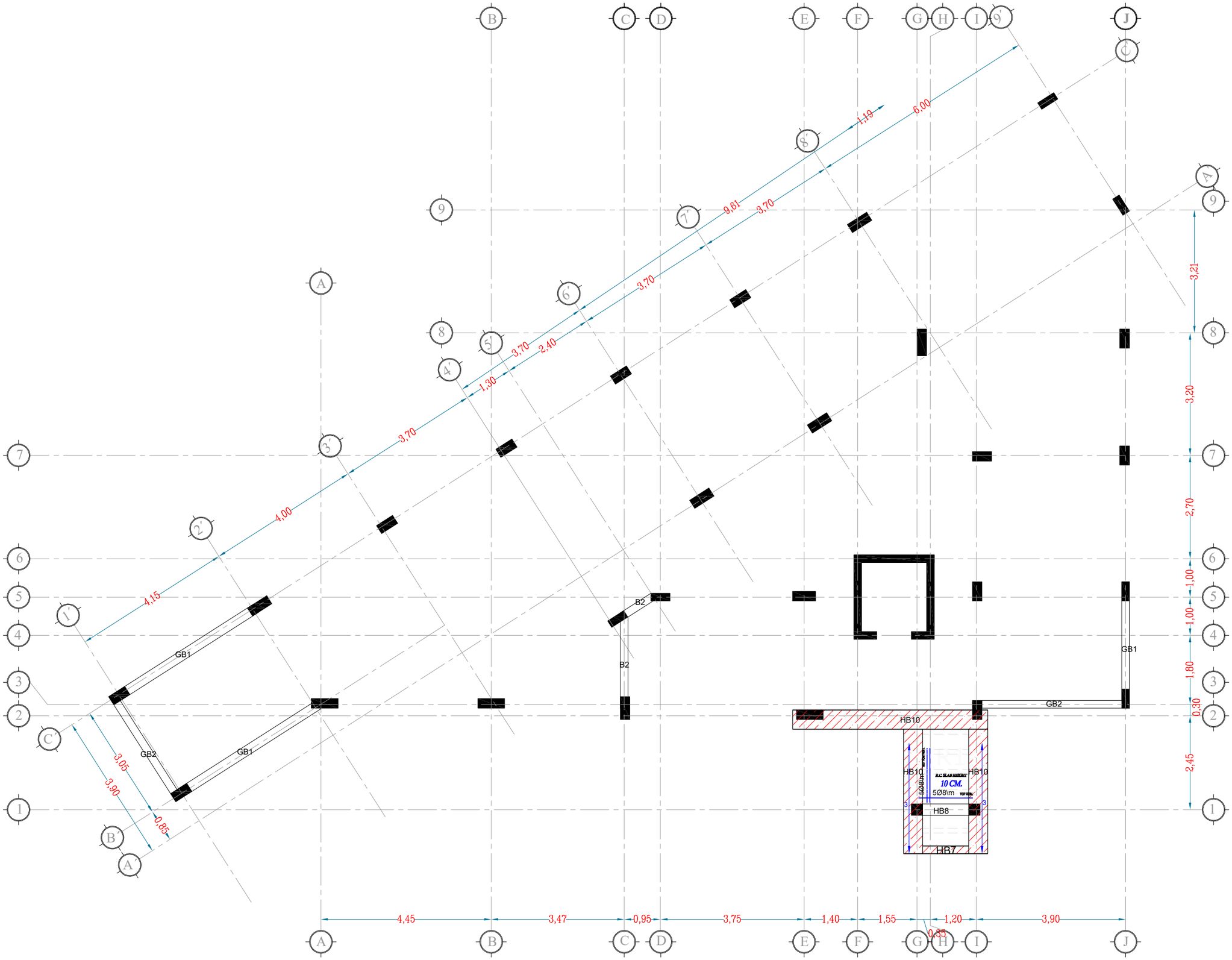

REMARKS: –

1. ALL DIMENSIONS AND ELEVATIONS ARE IN CENTIMETERS AND METERS RESPECTIVELY, UNLESS OVER WISE MENTIONED.
2. BUILDING WAS DESIGNED TO SUPPORT ONLY TWO REINFORCEMENT CONCRETE FLOORS AS SHOWED IN THE ARCHITECTURE AND STRUCTURE PLANS.

CONCRETE: –

1. ALL WORKMANSHIP AND MATERIALS SHALL BE IN ACCORDANCE WITH THE SPECIFICATION AND AMERICAN CONCRETE CODE ACI-318M-19 (REINFORCED CONCRETE STRUCTURES).
2. ORDINARY PORTLAND CEMENT SHALL BE USED IN CONCRETE.
3. CONCRETE QUALITY: – MINIMUM CONCRETE CUBE STRENGTH (FC') IS 30 MPA.
4. SIZES OF CONCRETE ELEMENTS DO NOT INCLUDE THICKNESS OF APPLIED FINISHES.

REINFORCEMENT: –

1. YIELDING STRESS OF STEEL IS GRADE 40 ASTM – 280 MPA OR GRADE 40 ASTM – 280 MPA AS STATED IN DRAWING NOTES.

United Nations Development Programme (UNDP)	
Project:	A New Building Replacing UNDSS Old Building
Location:	Sana'a- Yemen
Drawing Title:	Ground Beam and Roof for Tunnel
Design By :	UNDP Engineering Unit
Drawing Type: Structure	Status : Tender
Date: 13 April 2022	Drawing No. 5

F1

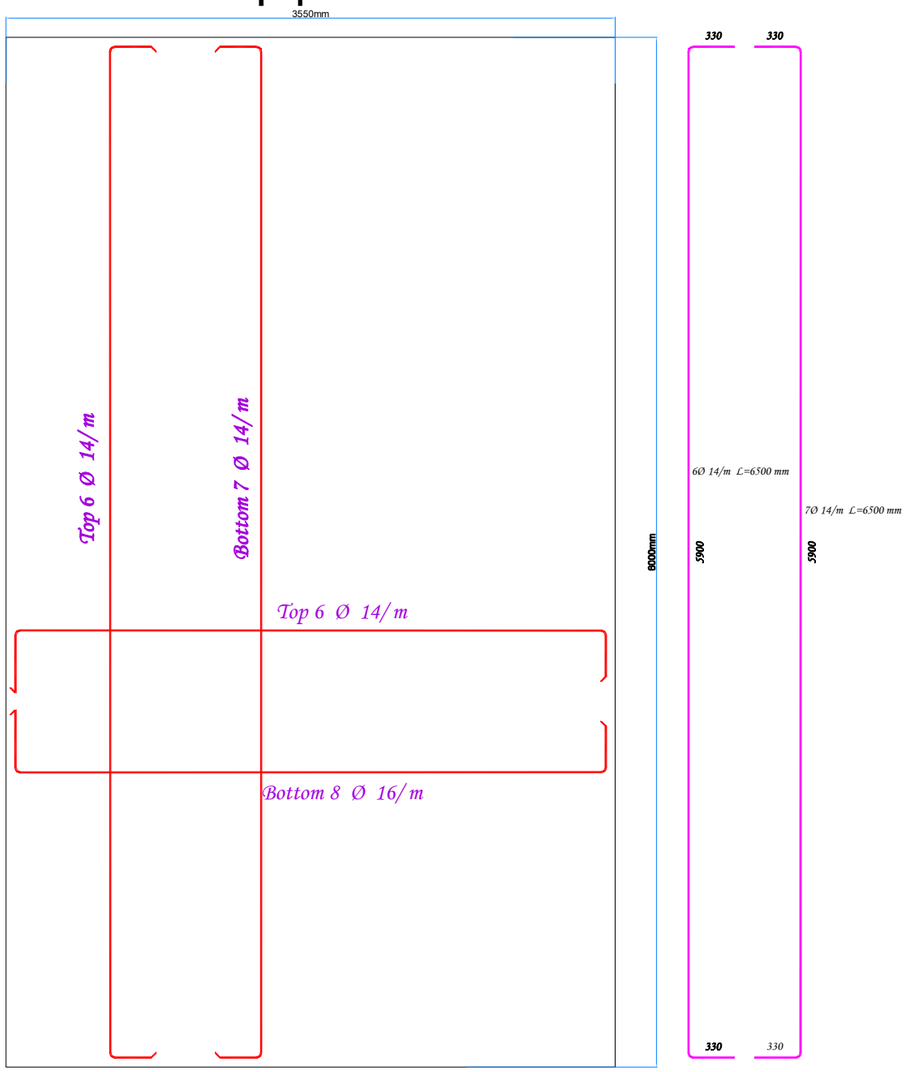

F2

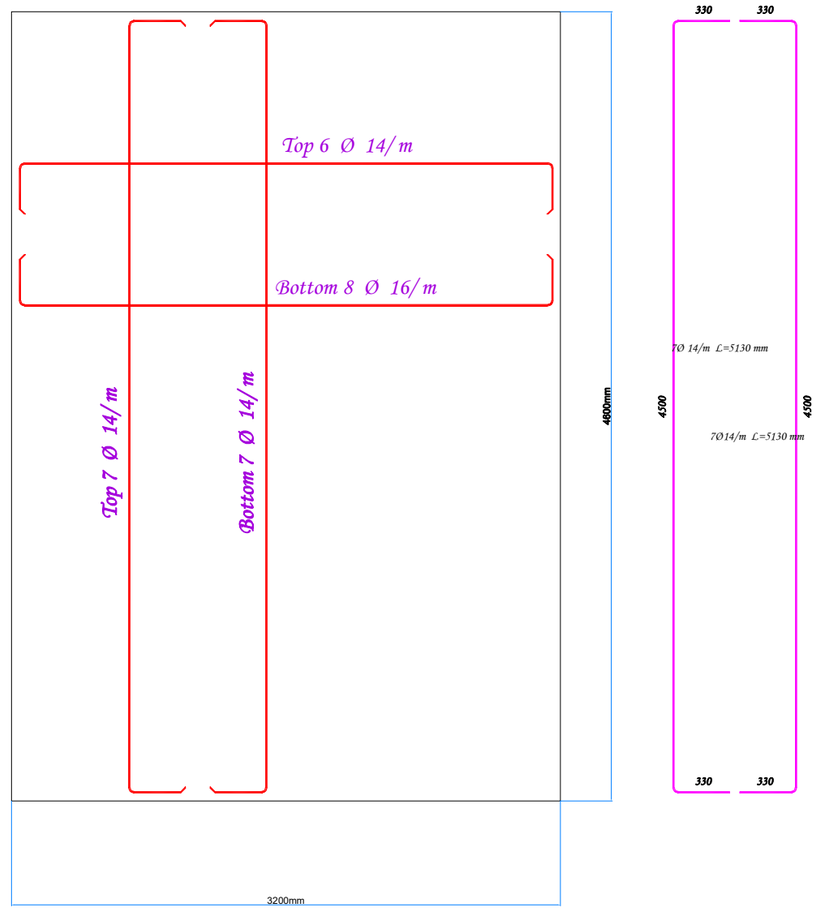

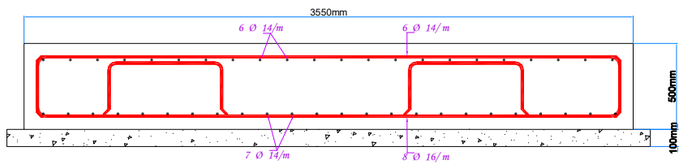

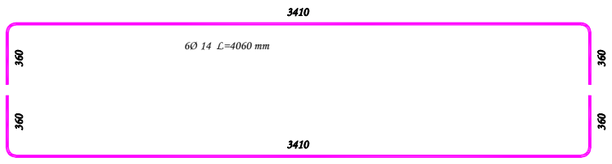

1Ø 16 to be distributed each 1 m

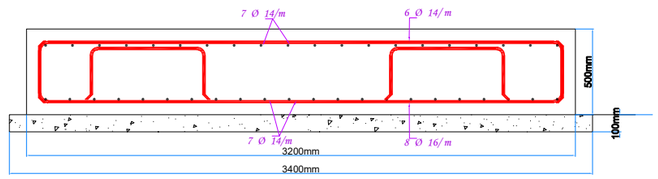

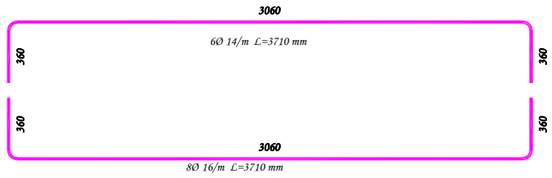

1Ø 16 to be distributed each 1 m

NOTES:

1. ALL DIMENSIONS AND ELEVATIONS ARE IN CENTIMETERS AND METERS RESPECTIVELY, UNLESS OVER WISE MENTIONED.
2. FOUNDATION HAS BEEN DESIGNED FOR SOIL ALLOWABLE NET SOIL BEARING CAPACITY 200 KPA.
3. SUPPLIED STEEL REBAR SHALL CONFORM TO ASTM A-615M WITH MINIMUM YIELD STRESS OF 2800 KG/CM2.
4. CONCRETE COVER FOR REINFORCEMENT BARS SHALL BE 50MM.
5. ORDINARY PORTLAND CEMENT SHALL BE USED IN CONCRETE.
6. THE 28-DAY CYLINDRICAL CONCRETE STRENGTH SHALL BE A MINIMUM OF 300 KG/CM2 FOR REINFORCED CONCRETE AND 200 KG/CM2 FOR PLAIN CONCRETE.
7. THE MATERIALS ENCOUNTERED AT SITE ARE CONSIDERED SUITABLE FOR BACKFILLING. HOWEVER, SUCH MATERIALS SHALL BE FREE FROM ORGANIC MATTER OR SALTS. THEY SHALL NOT CONTAIN ROCKS OR LAMBS OVER 15 CM IN GREATEST DIMENSIONS AND NOT MORE THAN 12 PERCENT LARGER THAN 7 CM THE BACK FILLED MATERIALS SHALL BE SPREAD IN LIFTS NOT MOISTURE CONTENT AND COMPACTED TO A DRY DENSITY NOT LESS THAN 95 PERCENT OF THE MAXIMUM DRY DENSITY AS OBTAINED BY MODIFIED PROCTOR COMPACTION TEST. THIS TYPE OF BACKFILL IS NORMALLY COMPACTED BY TAMPING ROLLERS WHEN SPACE IS AVAILABLE OR BY HAND OR POWER IN CONFINED AREAS.

United Nations Development Programme (UNDP)	
Project:	A New Building Replacing UNDSS Old Building
Location:	Sana'a- Yemen
Drawing Title:	Detail for Footing
Design By :	UNDP Engineering Unit
Drawing Type: Structure	Status : Tender
Date: 13 April 2022	Drawing No. 6

F3

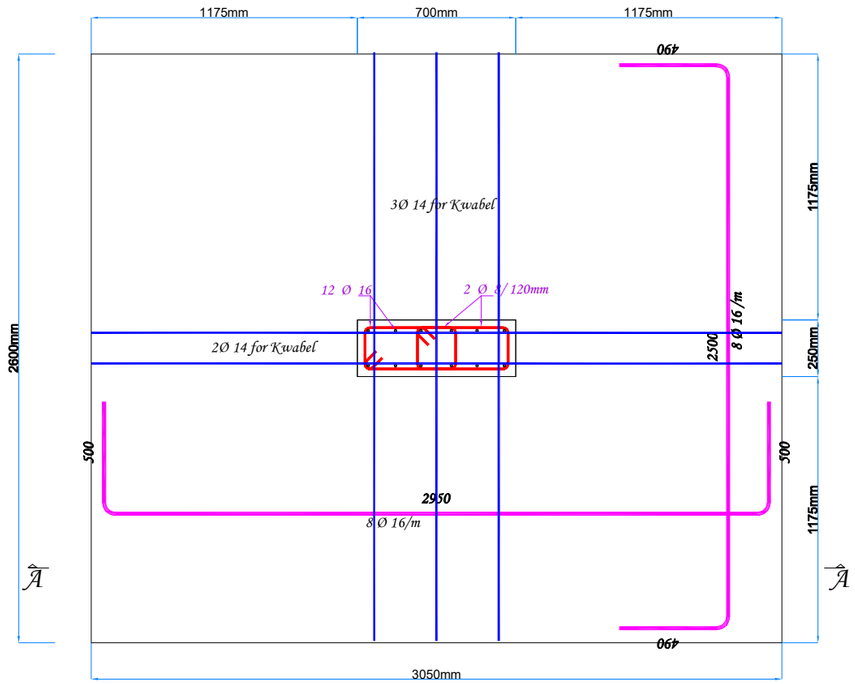

SEC A-A

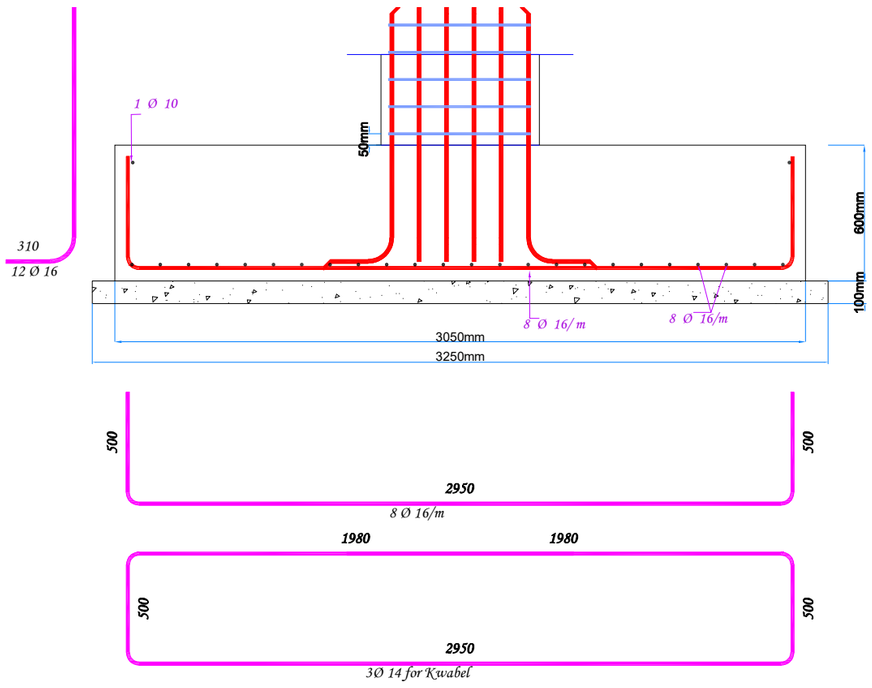

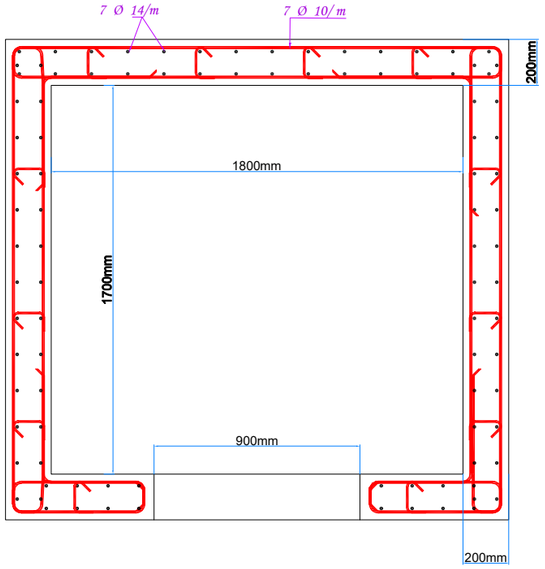

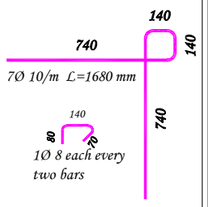

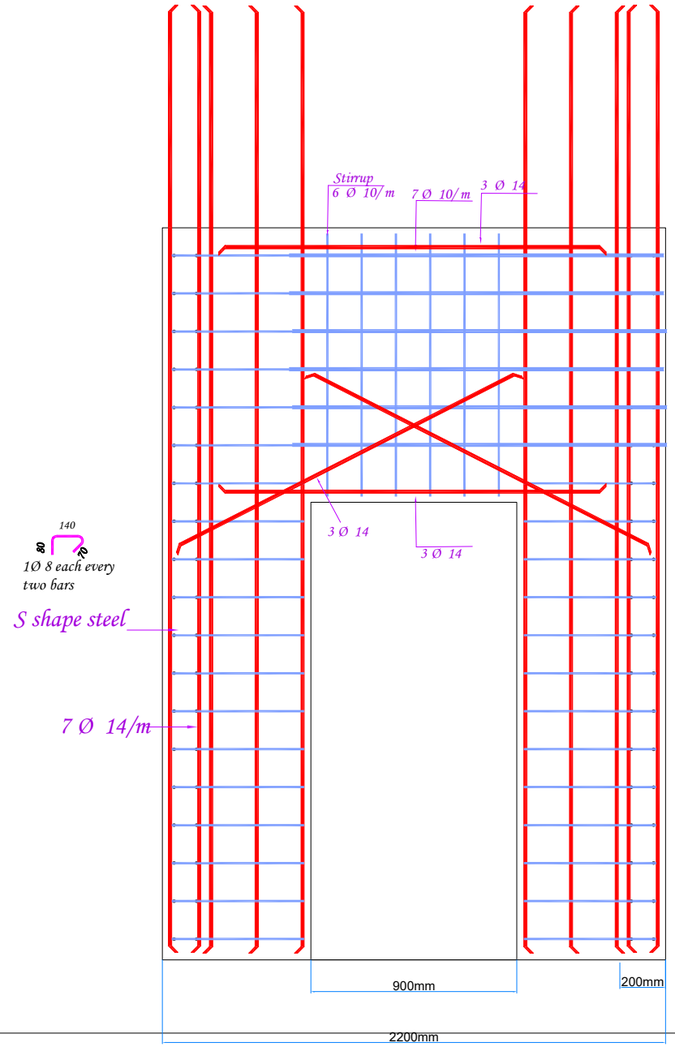

NOTES:

1. ALL DIMENSIONS AND ELEVATIONS ARE IN CENTIMETERS AND METERS RESPECTIVELY, UNLESS OVER WISE MENTIONED.
2. FOUNDATION HAS BEEN DESIGNED FOR SOIL ALLOWABLE NET SOIL BEARING CAPACITY 200 KPA.
3. SUPPLIED STEEL REBAR SHALL CONFORM TO ASTM A-615M WITH MINIMUM YIELD STRESS OF 2800 KG/CM2.
4. CONCRETE COVER FOR REINFORCEMENT BARS SHALL BE 50MM.
5. ORDINARY PORTLAND CEMENT SHALL BE USED IN CONCRETE.
6. THE 28-DAY CYLINDRICAL CONCRETE STRENGTH SHALL BE A MINIMUM OF 300 KG/CM2 FOR REINFORCED CONCRETE AND 200 KG/CM2 FOR PLAIN CONCRETE.
7. THE MATERIALS ENCOUNTERED AT SITE ARE CONSIDERED SUITABLE FOR BACKFILLING. HOWEVER, SUCH MATERIALS SHALL BE FREE FROM ORGANIC MATTER OR SALTS. THEY SHALL NOT CONTAIN ROCKS OR LAMBS OVER 15 CM IN GREATEST DIMENSIONS AND NOT MORE THAN 12 PERCENT LARGER THAN 7 CM THE BACK FILLED MATERIALS SHALL BE SPREAD IN LIFTS NOT MOISTURE CONTENT AND COMPACTED TO A DRY DENSITY NOT LESS THAN 95 PERCENT OF THE MAXIMUM DRY DENSITY AS OBTAINED BY MODIFIED PROCTOR COMPACTION TEST. THIS TYPE OF BACKFILL IS NORMALLY COMPACTED BY TAMPING ROLLERS WHEN SPACE IS AVAILABLE OR BY HAND OR POWER IN CONFINED AREAS.

United Nations Development Programme (UNDP)	
Project:	A New Building Replacing UNDSS Old Building
Location:	Sana'a- Yemen
Drawing Title:	Detail for Footing and Shear Wall
Design By :	UNDP Engineering Unit
Drawing Type: Structure	Status : Tender
Date: 13 April 2022	Drawing No. 7

Table Reinforcement for Columns in the Basement and Ground Floors							
Symbol	QTY.	Dimension		Reinforcement			Section
		Length (mm)	Width (mm)	Longitudinal Bars	Stirrup		
					At both column ends	At column middle	
C1	4	700	250	12 Ø 16	2 Ø 8 /120mm with L_o = 1000 mm	2 Ø 8 /150mm	
C2	6	600	250	10 Ø 16	2 Ø 8 /120mm with L_o = 1000 mm	2 Ø 8 /150mm	
C3	11	500	250	8Ø 16	1 Ø 8 /120mm with L_o = 700 mm	1 Ø 8 /150mm	
C4	6	500	200	8 Ø 16	1 Ø 8 /120mm with L_o = 700 mm	1 Ø 8 /150mm	
C5	2	300	300	8 Ø 16	2 Ø 8 /120mm with L_o = 700 mm	2 Ø 8 /150mm	

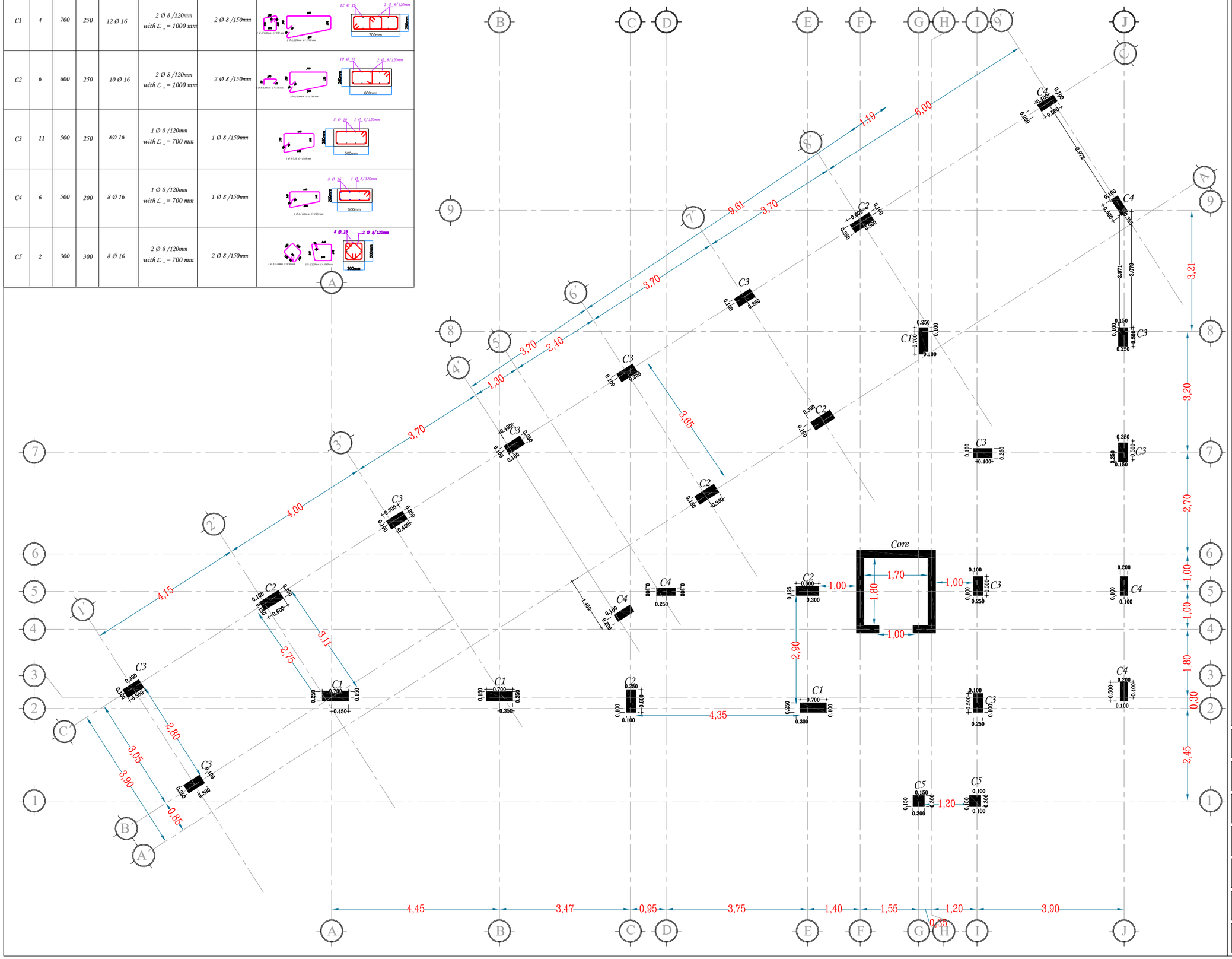

REMARKS: –

1. ALL DIMENSIONS AND ELEVATIONS ARE IN CENTIMETERS AND METERS RESPECTIVELY, UNLESS OVER WISE MENTIONED.
2. BUILDING WAS DESIGNED TO SUPPORT ONLY TWO REINFORCEMENT CONCRETE FLOORS AS SHOWED IN THE ARCHITECTURE AND STRUCTURE PLANS.

CONCRETE: –

1. ALL WORKMANSHIP AND MATERIALS SHALL BE IN ACCORDANCE WITH THE SPECIFICATION AND AMERICAN CONCRETE CODE ACI-318M-19 (REINFORCED CONCRETE STRUCTURES).
2. ORDINARY PORTLAND CEMENT SHALL BE USED IN CONCRETE.
3. CONCRETE QUALITY: – MINIMUM CONCRETE CUBE STRENGTH (FC') IS 30 MPA.
4. SIZES OF CONCRETE ELEMENTS DO NOT INCLUDE THICKNESS OF APPLIED FINISHES.

REINFORCEMENT: –

1. YIELDING STRESS OF STEEL IS GRADE 40 ASTM – 280 MPA OR GRADE 40 ASTM – 280 MPA AS STATED IN DRAWING NOTES.

United Nations Development Programme (UNDP)	
Project:	A New Building Replacing UNDSS Old Building
Location:	Sana'a- Yemen
Drawing Title:	Column for the Basement and Ground Floor
Design By :	UNDP Engineering Unit
Drawing Type: Structure	Status : Tender
Date: 13 April 2022	Drawing No. 8

Table Reinforcement for Columns Typical Floors							
Symbol	QTY.	Dimension		Reinforcement			Section
		Length (mm)	Width (mm)	Longitudinal Bars	Stirrup		
					At both column ends	At column middle	
C1	4	700	200	12 Ø 16	2 Ø 8 /120mm with L_o = 1000 mm	2 Ø 8 /150mm	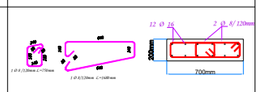
C2	6	600	200	10 Ø 16	2 Ø 8 /120mm with L_o = 1000 mm	2 Ø 8 /150mm	
C4	12	500	200	8 Ø 16	1 Ø 8 /120mm with L_o = 700 mm	1 Ø 8 /150mm	
C5	2	300	300	8 Ø 16	2 Ø 8 /120mm with L_o = 700 mm	2 Ø 8 /150mm	
C6	5	450	200	8 Ø 16	1 Ø 8 /120mm with L_o = 500 mm	1 Ø 8 /150mm	

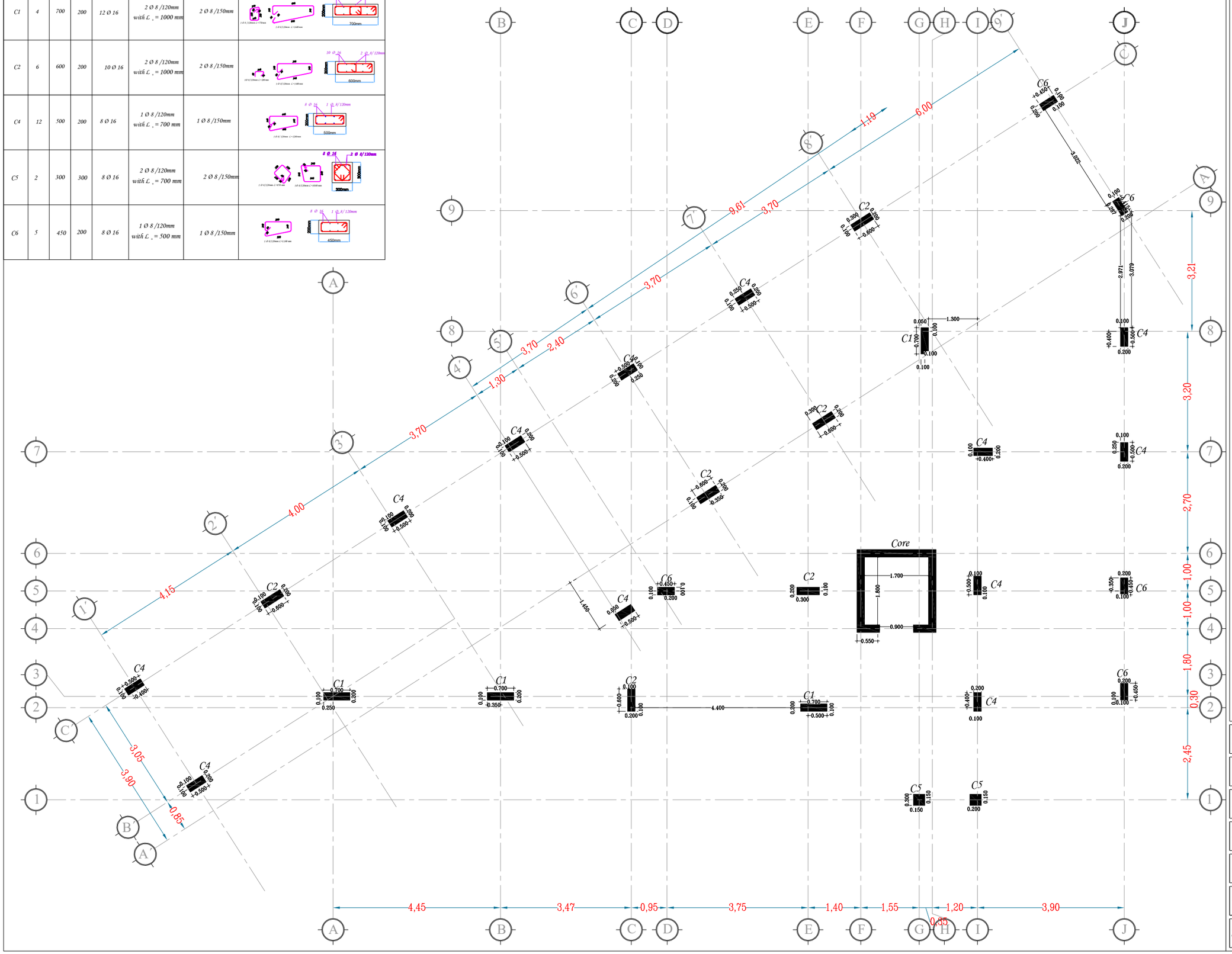

REMARKS: –

1. ALL DIMENSIONS AND ELEVATIONS ARE IN CENTIMETERS AND METERS RESPECTIVELY, UNLESS OVER WISE MENTIONED.
2. BUILDING WAS DESIGNED TO SUPPORT ONLY TWO REINFORCEMENT CONCRETE FLOORS AS SHOWED IN THE ARCHITECTURE AND STRUCTURE PLANS.

CONCRETE: –

1. ALL WORKMANSHIP AND MATERIALS SHALL BE IN ACCORDANCE WITH THE SPECIFICATION AND AMERICAN CONCRETE CODE ACI-318M-19 (REINFORCED CONCRETE STRUCTURES).
2. ORDINARY PORTLAND CEMENT SHALL BE USED IN CONCRETE.
3. CONCRETE QUALITY: – MINIMUM CONCRETE CUBE STRENGTH (FC') IS 30 MPA.
4. SIZES OF CONCRETE ELEMENTS DO NOT INCLUDE THICKNESS OF APPLIED FINISHES.

REINFORCEMENT: –

1. YIELDING STRESS OF STEEL IS GRADE 40 ASTM – 280 MPA OR GRADE 40 ASTM – 280 MPA AS STATED IN DRAWING NOTES.

United Nations Development Programme (UNDP)

Project: A New Building Replacing UNDSS Old Building

Location: Sana'a- Yemen

Drawing Title: Column for the Typical Floor

Design By : UNDP Engineering Unit

Drawing Type: Structure

Status : Tender

Date: 13 April 2022

Drawing No. 9

Table Reinforcement for Columns Typical Floors							
Symbol	QTY.	Dimension		Reinforcement			Section
		Length (mm)	Width (mm)	Longitudinal Bars	Stirrup		
					At both column ends	At column middle	
C1	4	700	200	12 Ø 16	2 Ø 8 /120mm with L_o = 1000 mm	2 Ø 8 /150mm	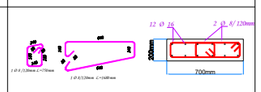
C2	6	600	200	10 Ø 16	2 Ø 8 /120mm with L_o = 1000 mm	2 Ø 8 /150mm	
C4	12	500	200	8 Ø 16	1 Ø 8 /120mm with L_o = 700 mm	1 Ø 8 /150mm	
C5	2	300	300	8 Ø 16	2 Ø 8 /120mm with L_o = 700 mm	2 Ø 8 /150mm	
C6	5	450	200	8 Ø 16	1 Ø 8 /120mm with L_o = 500 mm	1 Ø 8 /150mm	

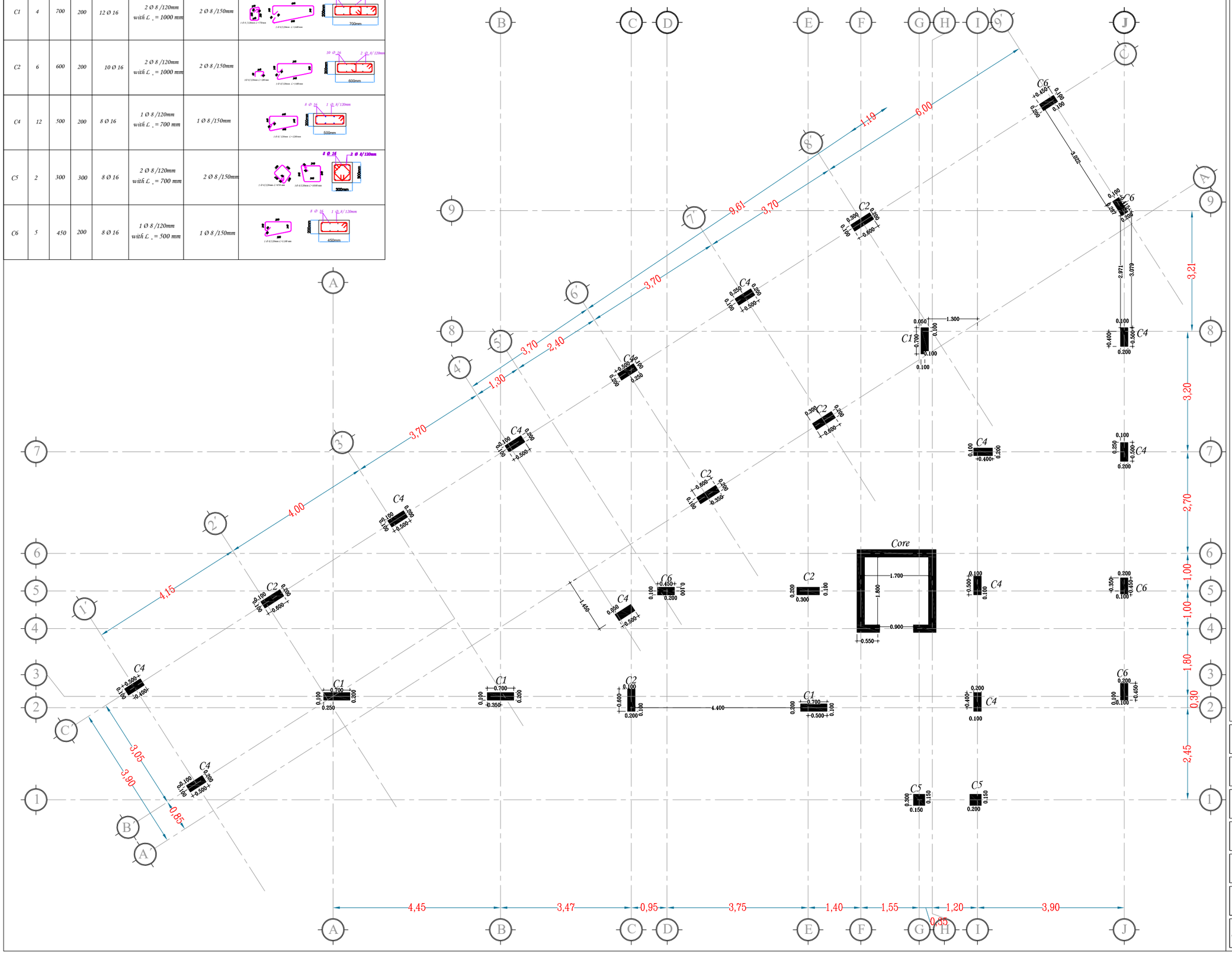

REMARKS: –

1. ALL DIMENSIONS AND ELEVATIONS ARE IN CENTIMETERS AND METERS RESPECTIVELY, UNLESS OVER WISE MENTIONED.
2. BUILDING WAS DESIGNED TO SUPPORT ONLY TWO REINFORCEMENT CONCRETE FLOORS AS SHOWED IN THE ARCHITECTURE AND STRUCTURE PLANS.

CONCRETE: –

1. ALL WORKMANSHIP AND MATERIALS SHALL BE IN ACCORDANCE WITH THE SPECIFICATION AND AMERICAN CONCRETE CODE ACI-318M-19 (REINFORCED CONCRETE STRUCTURES).
2. ORDINARY PORTLAND CEMENT SHALL BE USED IN CONCRETE.
3. CONCRETE QUALITY: – MINIMUM CONCRETE CUBE STRENGTH (FC') IS 30 MPA.
4. SIZES OF CONCRETE ELEMENTS DO NOT INCLUDE THICKNESS OF APPLIED FINISHES.

REINFORCEMENT: –

1. YIELDING STRESS OF STEEL IS GRADE 40 ASTM – 280 MPA OR GRADE 40 ASTM – 280 MPA AS STATED IN DRAWING NOTES.

United Nations Development Programme (UNDP)

Project: A New Building Replacing UNDSS Old Building

Location: Sana'a- Yemen

Drawing Title: Column for the Typical Floor

Design By : UNDP Engineering Unit

Drawing Type: Structure

Status : Tender

Date: 13 April 2022

Drawing No. 9

Table Reinforcement for Columns Typical Floors

Symbol	QTY.	Dimension		Reinforcement			Section
		Length (mm)	Width (mm)	Longitudinal Bars	Stirrup		
					At both column ends	At column middle	
C1	1	700	200	12 Ø 16	2 Ø 8 /120mm with L_u = 1000 mm	2 Ø 8 /150mm	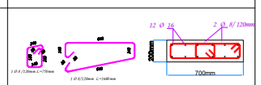
C2	2	600	200	10 Ø 16	2 Ø 8 /120mm with L_u = 1000 mm	2 Ø 8 /150mm	
C6	2	450	200	8 Ø 16	1 Ø 8 /120mm with L_u = 500 mm	1 Ø 8 /150mm	

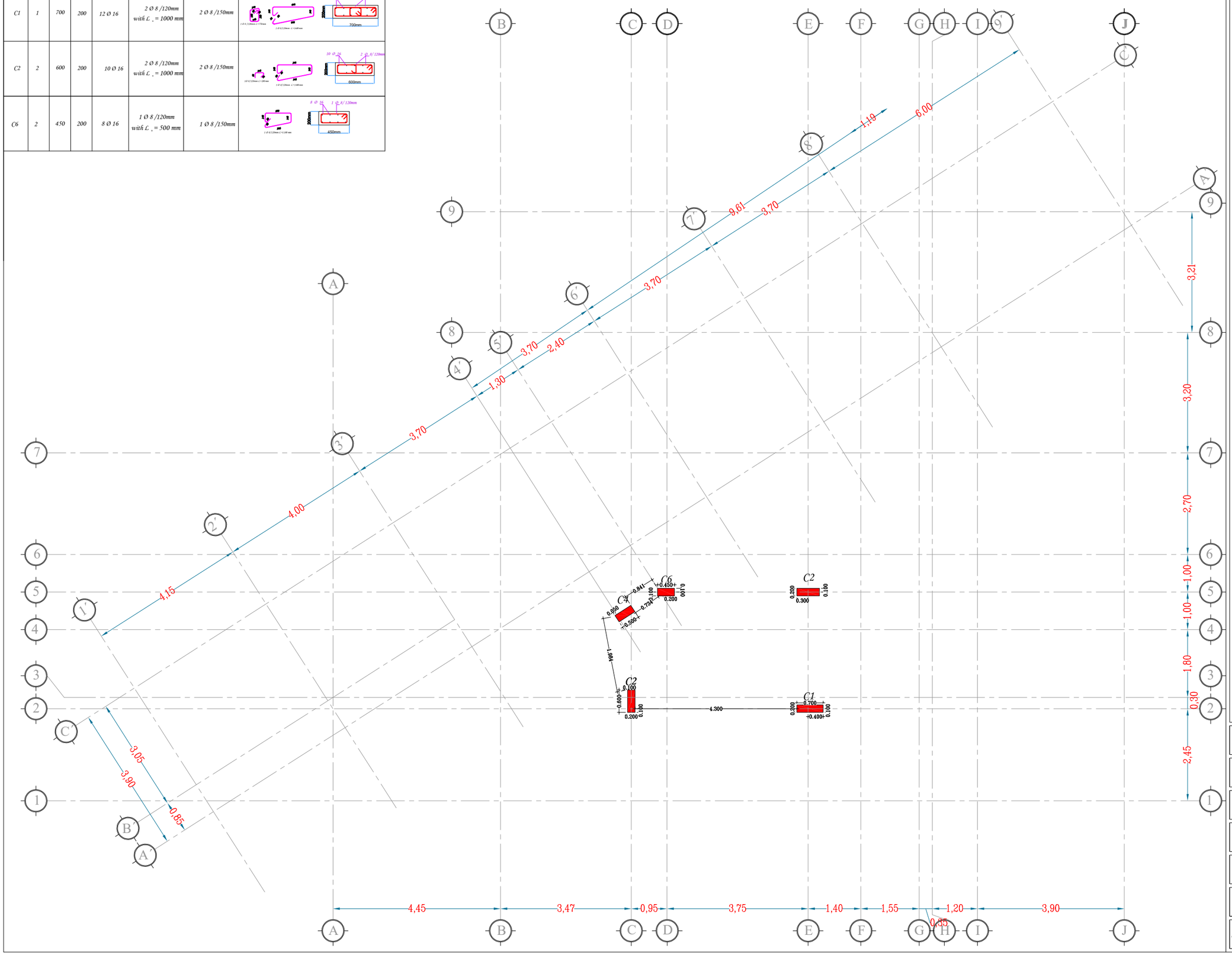

REMARKS: –

1. ALL DIMENSIONS AND ELEVATIONS ARE IN CENTIMETERS AND METERS RESPECTIVELY, UNLESS OVER WISE MENTIONED.
2. BUILDING WAS DESIGNED TO SUPPORT ONLY TWO REINFORCEMENT CONCRETE FLOORS AS SHOWED IN THE ARCHITECTURE AND STRUCTURE PLANS.

CONCRETE: –

1. ALL WORKMANSHIP AND MATERIALS SHALL BE IN ACCORDANCE WITH THE SPECIFICATION AND AMERICAN CONCRETE CODE ACI-318M-19 (REINFORCED CONCRETE STRUCTURES).
2. ORDINARY PORTLAND CEMENT SHALL BE USED IN CONCRETE.
3. CONCRETE QUALITY: – MINIMUM CONCRETE CUBE STRENGTH (FC') IS 30 MPA.
4. SIZES OF CONCRETE ELEMENTS DO NOT INCLUDE THICKNESS OF APPLIED FINISHES.

REINFORCEMENT: –

1. YIELDING STRESS OF STEEL IS GRADE 40 ASTM – 280 MPA OR GRADE 40 ASTM – 280 MPA AS STATED IN DRAWING NOTES.

United Nations Development Programme (UNDP)

Project: A New Building Replacing UNDSS Old Building

Location: Sana'a- Yemen

Drawing Title: Column for the Roof

Design By : UNDP Engineering Unit

Drawing Type: Structure

Status : Tender

Date: 13 April 2022

Drawing No. 10

Table Reinforcement for Columns in the Basement and Ground Floors							
Symbol	QTY.	Dimension		Reinforcement			Section
		Length (mm)	Width (mm)	Longitudinal Bars	Stirrup		
					At both column ends	At column middle	
C1	4	700	250	12 Ø 16	2 Ø 8 /120mm with L_o = 1000 mm	2 Ø 8 /150mm	
C2	6	600	250	10 Ø 16	2 Ø 8 /120mm with L_o = 1000 mm	2 Ø 8 /150mm	
C3	11	500	250	10 Ø 16	1 Ø 8 /120mm with L_o = 700 mm	1 Ø 8 /150mm	
C4	6	500	200	8 Ø 16	1 Ø 8 /120mm with L_o = 700 mm	1 Ø 8 /150mm	
C5	2	300	300	8 Ø 16	2 Ø 8 /120mm with L_o = 700 mm	2 Ø 8 /150mm	

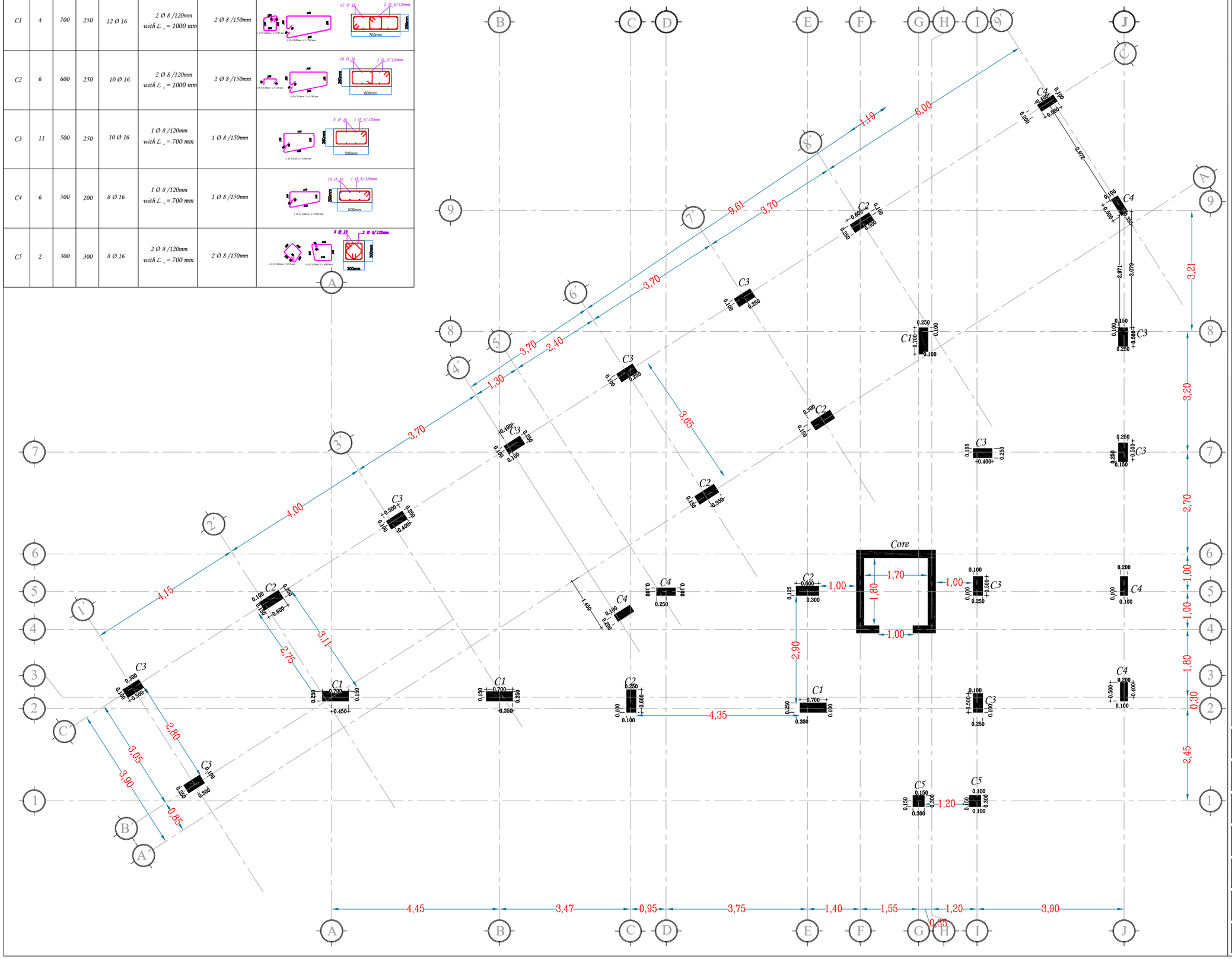

REMARKS: –

1. ALL DIMENSIONS AND ELEVATIONS ARE IN CENTIMETERS AND METERS RESPECTIVELY, UNLESS OVER WISE MENTIONED.
2. BUILDING WAS DESIGNED TO SUPPORT ONLY TWO REINFORCEMENT CONCRETE FLOORS AS SHOWED IN THE ARCHITECTURE AND STRUCTURE PLANS.

CONCRETE: –

1. ALL WORKMANSHIP AND MATERIALS SHALL BE IN ACCORDANCE WITH THE SPECIFICATION AND AMERICAN CONCRETE CODE ACI-318M-19 (REINFORCED CONCRETE STRUCTURES).
2. ORDINARY PORTLAND CEMENT SHALL BE USED IN CONCRETE.
3. CONCRETE QUALITY: – MINIMUM CONCRETE CUBE STRENGTH (FC') IS 30 MPA.
4. SIZES OF CONCRETE ELEMENTS DO NOT INCLUDE THICKNESS OF APPLIED FINISHES.

REINFORCEMENT: –

1. YIELDING STRESS OF STEEL IS GRADE 40 ASTM – 280 MPA OR GRADE 40 ASTM – 280 MPA AS STATED IN DRAWING NOTES.

United Nations Development Programme (UNDP)	
Project: A New Building Replacing UNDSS Old Building	
Location: Sana'a- Yemen	
Drawing Title: Column for the Basement and Ground Floor	
Design By : UNDP Engineering Unit	
Drawing Type: Structure	Status : Tender
Date: 13 April 2022	Drawing No. 8

Table Reinforcement for Columns Typical Floors

Symbol	QTY.	Dimension		Reinforcement			Section
		Length (mm)	Width (mm)	Longitudinal Bars	Stirrup		
					At both column ends	At column middle	
C1	4	700	200	12 Ø 16	2 Ø 8 /120mm with L_o = 1000 mm	2 Ø 8 /150mm	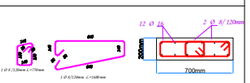
C2	6	600	200	10 Ø 16	2 Ø 8 /120mm with L_o = 1000 mm	2 Ø 8 /150mm	
C4	12	500	200	8 Ø 16	1 Ø 8 /120mm with L_o = 700 mm	1 Ø 8 /150mm	
C5	2	300	300	8 Ø 16	1 Ø 8 /120mm with L_o = 700 mm	1 Ø 8 /150mm	
C6	5	450	200	8 Ø 16	1 Ø 8 /120mm with L_o = 500 mm	1 Ø 8 /150mm	

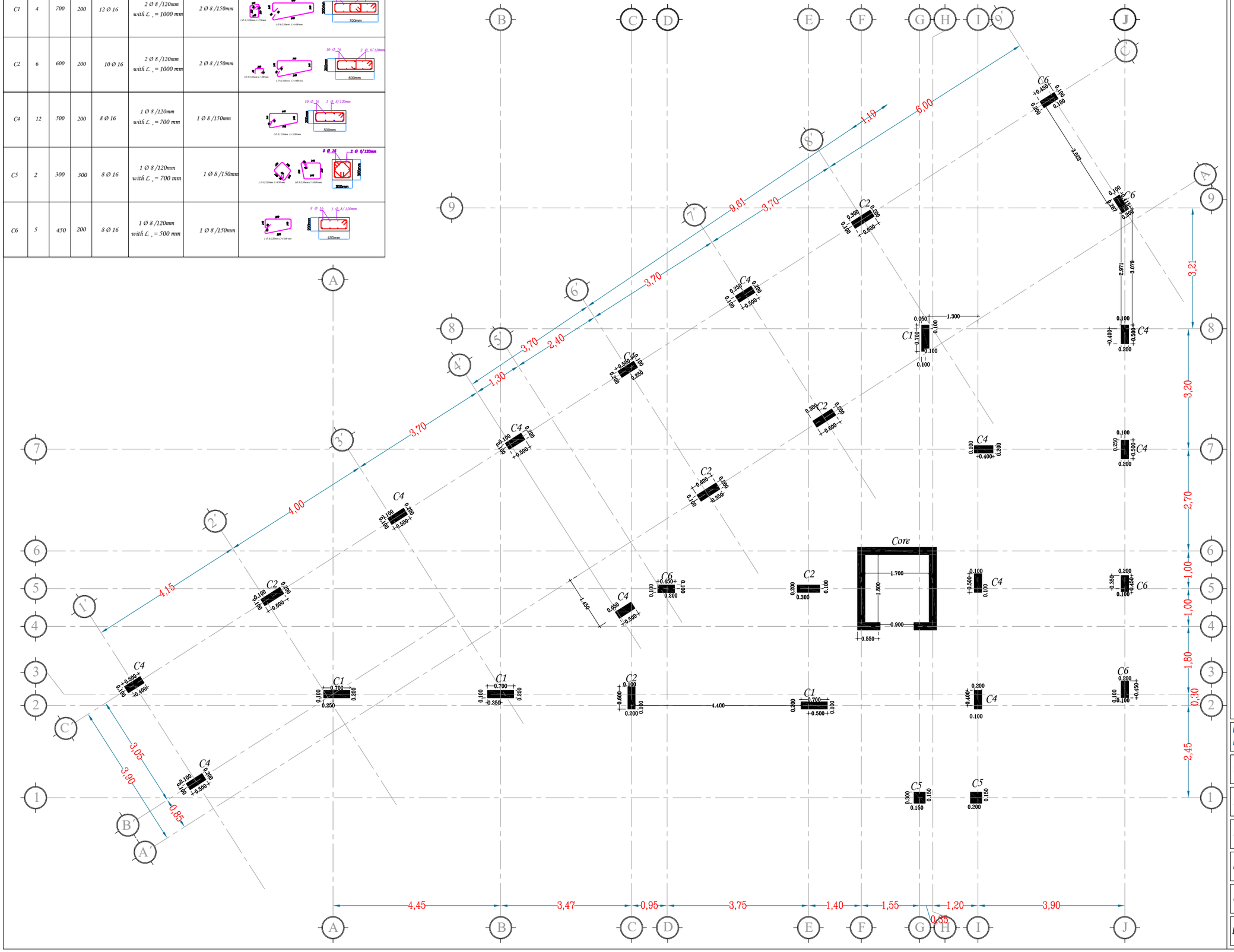

REMARKS: –

1. ALL DIMENSIONS AND ELEVATIONS ARE IN CENTIMETERS AND METERS RESPECTIVELY, UNLESS OVER WISE MENTIONED.
2. BUILDING WAS DESIGNED TO SUPPORT ONLY TWO REINFORCEMENT CONCRETE FLOORS AS SHOWED IN THE ARCHITECTURE AND STRUCTURE PLANS.

CONCRETE: –

1. ALL WORKMANSHIP AND MATERIALS SHALL BE IN ACCORDANCE WITH THE SPECIFICATION AND AMERICAN CONCRETE CODE ACI-318M-19 (REINFORCED CONCRETE STRUCTURES).
2. ORDINARY PORTLAND CEMENT SHALL BE USED IN CONCRETE.
3. CONCRETE QUALITY: – MINIMUM CONCRETE CUBE STRENGTH (FC') IS 30 MPA.
4. SIZES OF CONCRETE ELEMENTS DO NOT INCLUDE THICKNESS OF APPLIED FINISHES.

REINFORCEMENT: –

1. YIELDING STRESS OF STEEL IS GRADE 40 ASTM – 280 MPA OR GRADE 40 ASTM – 280 MPA AS STATED IN DRAWING NOTES.

United Nations Development Programme (UNDP)

Project: A New Building Replacing UNDSS Old Building

Location: Sana'a- Yemen

Drawing Title: Column for the Typical Floor

Design By : UNDP Engineering Unit

Drawing Type: Structure

Status : Tender

Date: 13 April 2022

Drawing No. 9

Table Reinforcement for Columns Typical Floors

Symbol	QTY.	Dimension		Reinforcement			Section
		Length (mm)	Width (mm)	Longitudinal Bars	Stirrup		
					At both column ends	At column middle	
C1	1	700	200	12 Ø 16	2 Ø 8 /120mm with L_u = 1000 mm	2 Ø 8 /150mm	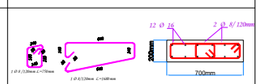
C2	2	600	200	10 Ø 16	2 Ø 8 /120mm with L_u = 1000 mm	2 Ø 8 /150mm	
C6	2	450	200	8 Ø 16	1 Ø 8 /120mm with L_u = 500 mm	1 Ø 8 /150mm	

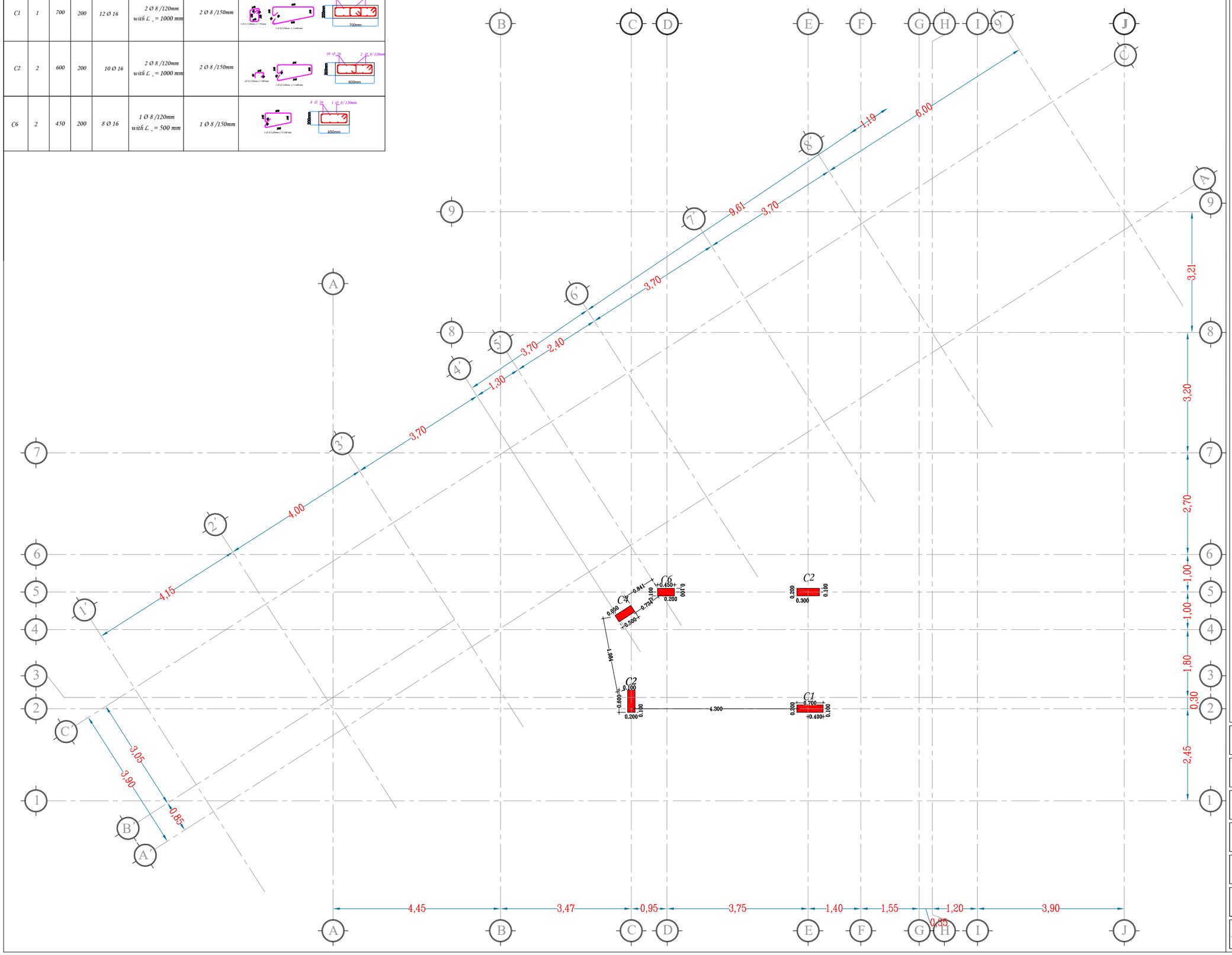

REMARKS: –

1. ALL DIMENSIONS AND ELEVATIONS ARE IN CENTIMETERS AND METERS RESPECTIVELY, UNLESS OVER WISE MENTIONED.
2. BUILDING WAS DESIGNED TO SUPPORT ONLY TWO REINFORCEMENT CONCRETE FLOORS AS SHOWED IN THE ARCHITECTURE AND STRUCTURE PLANS.

CONCRETE: –

1. ALL WORKMANSHIP AND MATERIALS SHALL BE IN ACCORDANCE WITH THE SPECIFICATION AND AMERICAN CONCRETE CODE ACI-318M-19 (REINFORCED CONCRETE STRUCTURES).
2. ORDINARY PORTLAND CEMENT SHALL BE USED IN CONCRETE.
3. CONCRETE QUALITY: – MINIMUM CONCRETE CUBE STRENGTH (FC') IS 30 MPA.
4. SIZES OF CONCRETE ELEMENTS DO NOT INCLUDE THICKNESS OF APPLIED FINISHES.

REINFORCEMENT: –

1. YIELDING STRESS OF STEEL IS GRADE 40 ASTM – 280 MPA OR GRADE 40 ASTM – 280 MPA AS STATED IN DRAWING NOTES.

United Nations Development Programme (UNDP)

Project: A New Building Replacing UNDSS Old Building

Location: Sana'a- Yemen

Drawing Title: Column for the Roof

Design By : UNDP Engineering Unit

Drawing Type: Structure

Status : Tender

Date: 13 April 2022

Drawing No. 10

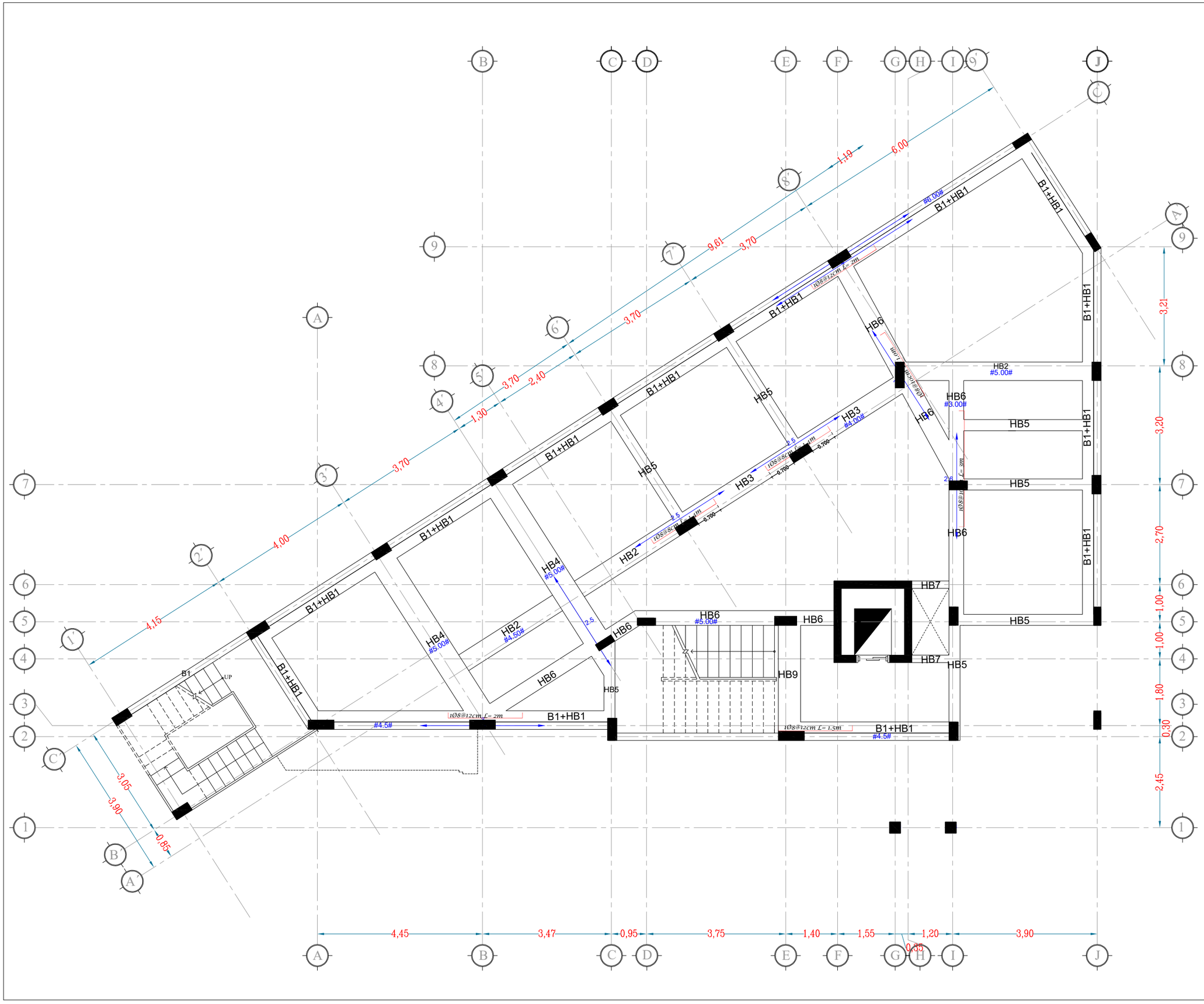

REMARKS: –

1. ALL DIMENSIONS AND ELEVATIONS ARE IN CENTIMETERS AND METERS RESPECTIVELY, UNLESS OVER WISE MENTIONED.
2. BUILDING WAS DESIGNED TO SUPPORT ONLY TWO REINFORCEMENT CONCRETE FLOORS AS SHOWED IN THE ARCHITECTURE AND STRUCTURE PLANS.

CONCRETE: –

1. ALL WORKMANSHIP AND MATERIALS SHALL BE IN ACCORDANCE WITH THE SPECIFICATION AND AMERICAN CONCRETE CODE ACI-318M-19 (REINFORCED CONCRETE STRUCTURES).
2. ORDINARY PORTLAND CEMENT SHALL BE USED IN CONCRETE.
3. CONCRETE QUALITY: – MINIMUM CONCRETE CUBE STRENGTH (FC') IS 30 MPA.
4. SIZES OF CONCRETE ELEMENTS DO NOT INCLUDE THICKNESS OF APPLIED FINISHES.

REINFORCEMENT: –

1. YIELDING STRESS OF STEEL IS GRADE 40 ASTM – 280 MPA OR GRADE 40 ASTM – 280 MPA AS STATED IN DRAWING NOTES.

United Nations Development Programme (UNDP)	
Project: A New Building Replacing UNDSS Old Building	
Location: Sana'a- Yemen	
Drawing Title: Beams for the Ground Floor	
Design By : UNDP Engineering Unit	
Drawing Type: Structure	Status : Tender
Date: 13 April 2022	Drawing No. 11

TABLE REINFORCEMENT FOR THE BEAMS

Symbol	Dimension		Reinforcement				Stirrup	
	Width (cm)	Height (cm)	Lower CON	Lower ADD ##	Upper CON	Upper ADD ⟷	MID	EDGE
B1	20	50	3Ø16	2Ø16	3Ø16	2Ø18	1Ø8@20cm	1Ø8@12cm
HB1	50	30	4Ø16	------	2Ø16	4Ø18	1Ø8@13cm	1Ø8@13cm
HB2	50	30	6Ø16	3Ø18	3Ø16	3Ø18	1Ø8@13cm	1Ø8@8cm
HB3	50	30	4Ø16	2Ø16	3Ø16	3Ø18	1Ø8@13cm	1Ø8@8cm
HB4	70	30	6Ø16	3Ø18	6Ø16	3Ø18	2Ø8@13cm	2Ø8@13cm
HB5	30	30	4Ø16	------	2Ø16	3Ø16	1Ø8@13cm	1Ø8@13cm
HB6	40	30	4Ø16	3Ø16	3Ø16	3Ø16	1Ø8@13cm	1Ø8@10cm
HB7	20	30	3Ø16	------	2Ø16	------	1Ø8@13cm	1Ø8@13cm
HB8	30	30	3Ø16	------	2Ø16	------	1Ø8@13cm	1Ø8@13cm
HB9	60	30	7Ø18	------	6Ø16	------	2Ø10@15cm	2Ø10@15cm
HB10	40	30	5Ø14	------	5Ø14	------	1Ø8@13cm	1Ø8@13cm
HB11	60	30	5Ø16	------	3Ø16	------	1Ø8@13cm	1Ø8@13cm
B2	20	60	5Ø16	------	3Ø16	------	1Ø8@15cm	1Ø8@15cm
B3	20	60	4Ø16	------	3Ø16	------	1Ø8@15cm	1Ø8@15cm
B4	15	30	2Ø16	------	2Ø16	------	1Ø8@15cm	1Ø8@15cm
GB1	25	50	3Ø16	------	3Ø16	------	1Ø8@15cm	1Ø8@15cm
GB2	20	50	3Ø14	------	3Ø14	------	1Ø8@15cm	1Ø8@15cm

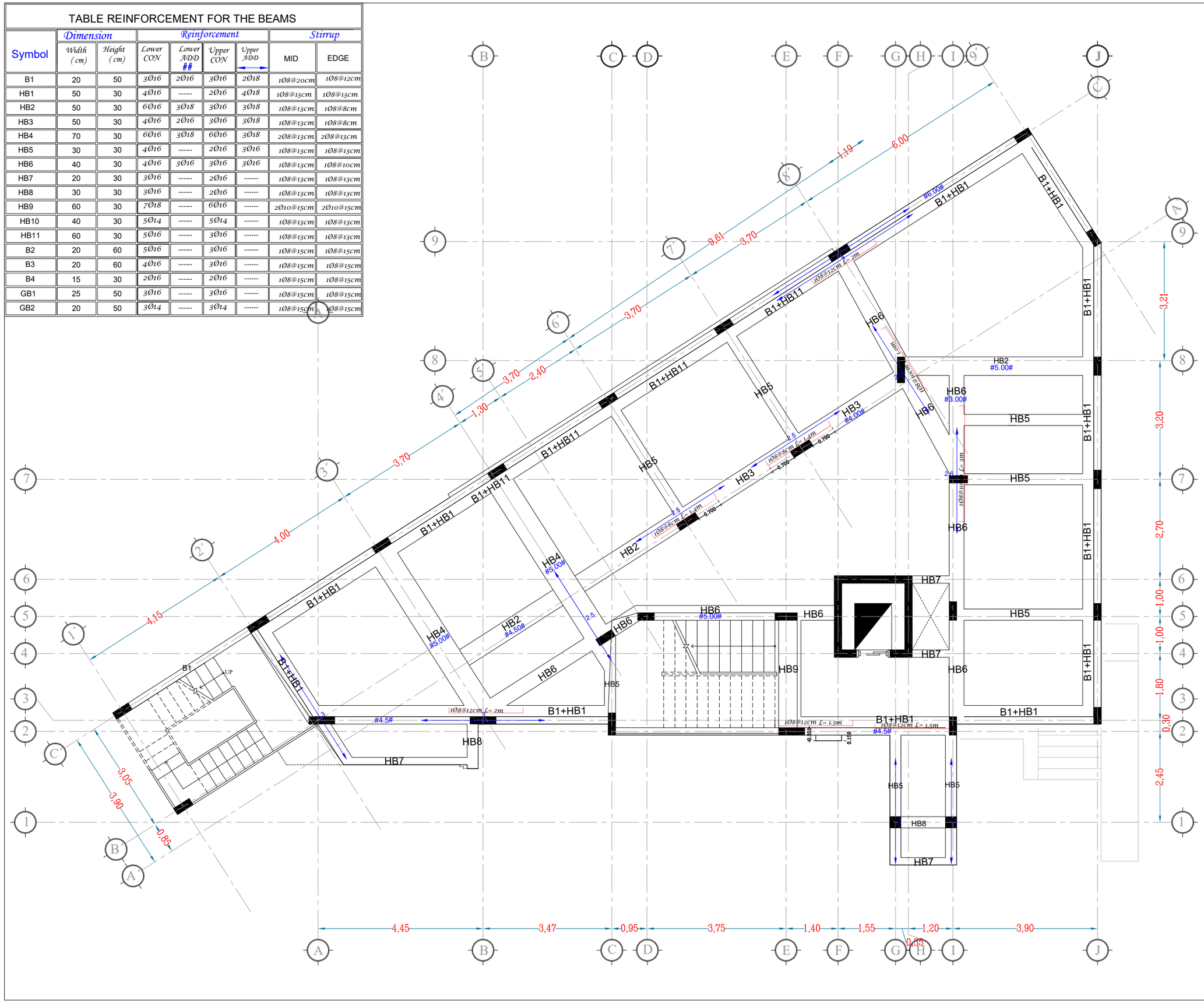

REMARKS: –

1. ALL DIMENSIONS AND ELEVATIONS ARE IN CENTIMETERS AND METERS RESPECTIVELY, UNLESS OVER WISE MENTIONED.
2. BUILDING WAS DESIGNED TO SUPPORT ONLY TWO REINFORCEMENT CONCRETE FLOORS AS SHOWED IN THE ARCHITECTURE AND STRUCTURE PLANS.

CONCRETE: –

1. ALL WORKMANSHIP AND MATERIALS SHALL BE IN ACCORDANCE WITH THE SPECIFICATION AND AMERICAN CONCRETE CODE ACI–318M–19 (REINFORCED CONCRETE STRUCTURES).
2. ORDINARY PORTLAND CEMENT SHALL BE USED IN CONCRETE.
3. CONCRETE QUALITY: – MINIMUM CONCRETE CUBE STRENGTH (FC') IS 30 MPA.
4. SIZES OF CONCRETE ELEMENTS DO NOT INCLUDE THICKNESS OF APPLIED FINISHES.

REINFORCEMENT: –

1. YIELDING STRESS OF STEEL IS GRADE 40 ASTM – 280 MPA OR GRADE 40 ASTM – 280 MPA AS STATED IN DRAWING NOTES.

United Nations Development Programme (UNDP)	
Project: A New Building Replacing UNDSS Old Building	
Location: Sana'a- Yemen	
Drawing Title: Beams for Typical Floors	
Design By : UNDP Engineering Unit	
Drawing Type: Structure	Status : Tender
Date: 13 April 2022	Drawing No. 12

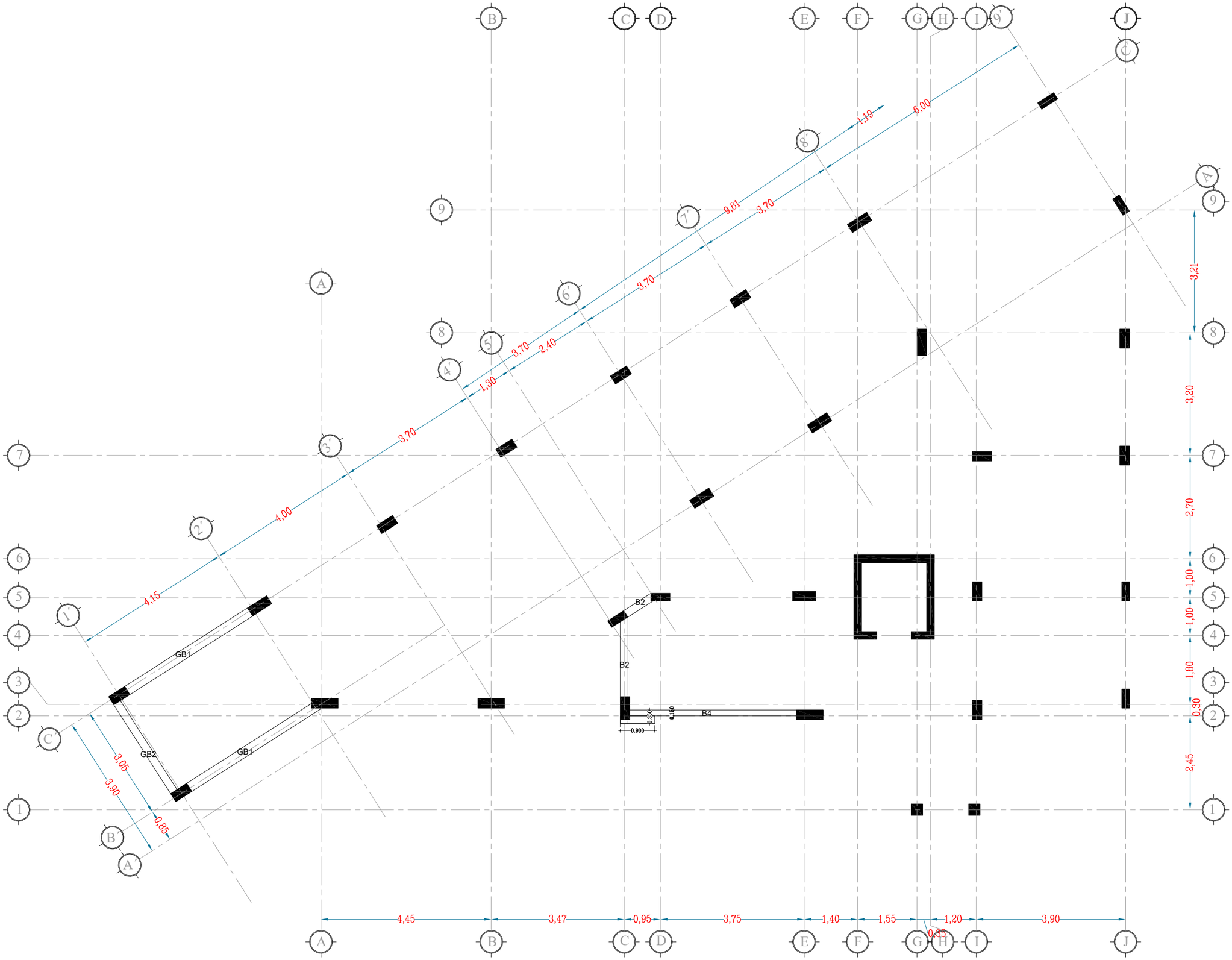

REMARKS: –

1. ALL DIMENSIONS AND ELEVATIONS ARE IN CENTIMETERS AND METERS RESPECTIVELY, UNLESS OVER WISE MENTIONED.
2. BUILDING WAS DESIGNED TO SUPPORT ONLY TWO REINFORCEMENT CONCRETE FLOORS AS SHOWED IN THE ARCHITECTURE AND STRUCTURE PLANS.

CONCRETE: –

1. ALL WORKMANSHIP AND MATERIALS SHALL BE IN ACCORDANCE WITH THE SPECIFICATION AND AMERICAN CONCRETE CODE ACI-318M-19 (REINFORCED CONCRETE STRUCTURES).
2. ORDINARY PORTLAND CEMENT SHALL BE USED IN CONCRETE.
3. CONCRETE QUALITY: – MINIMUM CONCRETE CUBE STRENGTH (FC') IS 30 MPA.
4. SIZES OF CONCRETE ELEMENTS DO NOT INCLUDE THICKNESS OF APPLIED FINISHES.

REINFORCEMENT: –

1. YIELDING STRESS OF STEEL IS GRADE 40 ASTM – 280 MPA OR GRADE 40 ASTM – 280 MPA AS STATED IN DRAWING NOTES.

United Nations Development Programme (UNDP)	
Project: A New Building Replacing UNDSS Old Building	
Location: Sana'a- Yemen	
Drawing Title: Staircase Beams	
Design By : UNDP Engineering Unit	
Drawing Type: Structure	Status : Tender
Date: 13 April 2022	Drawing No. 13

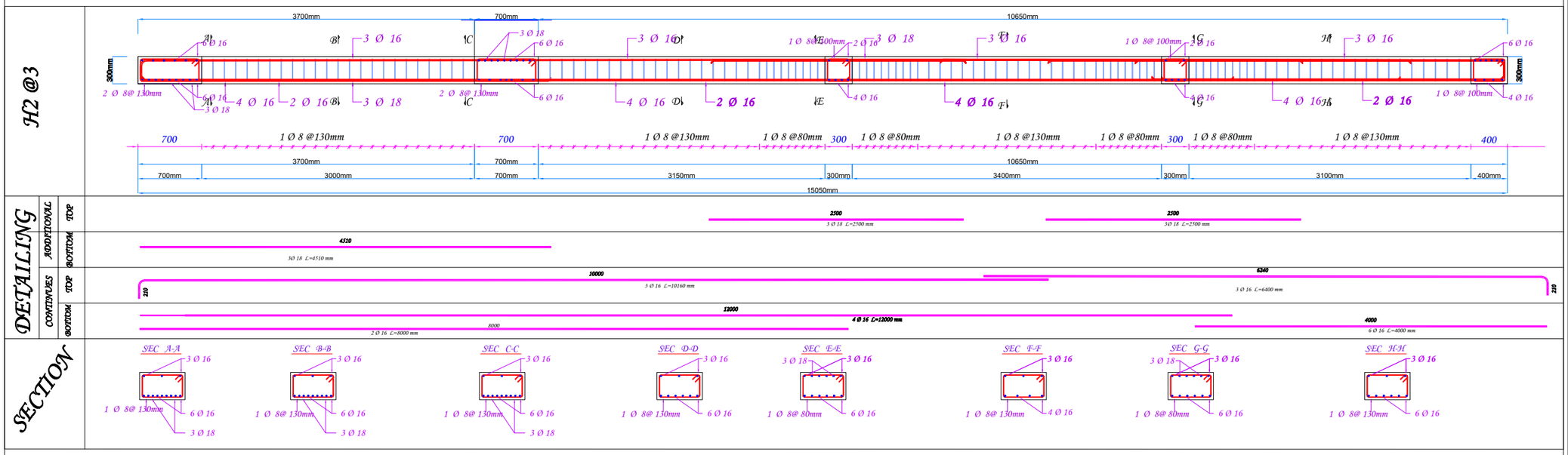

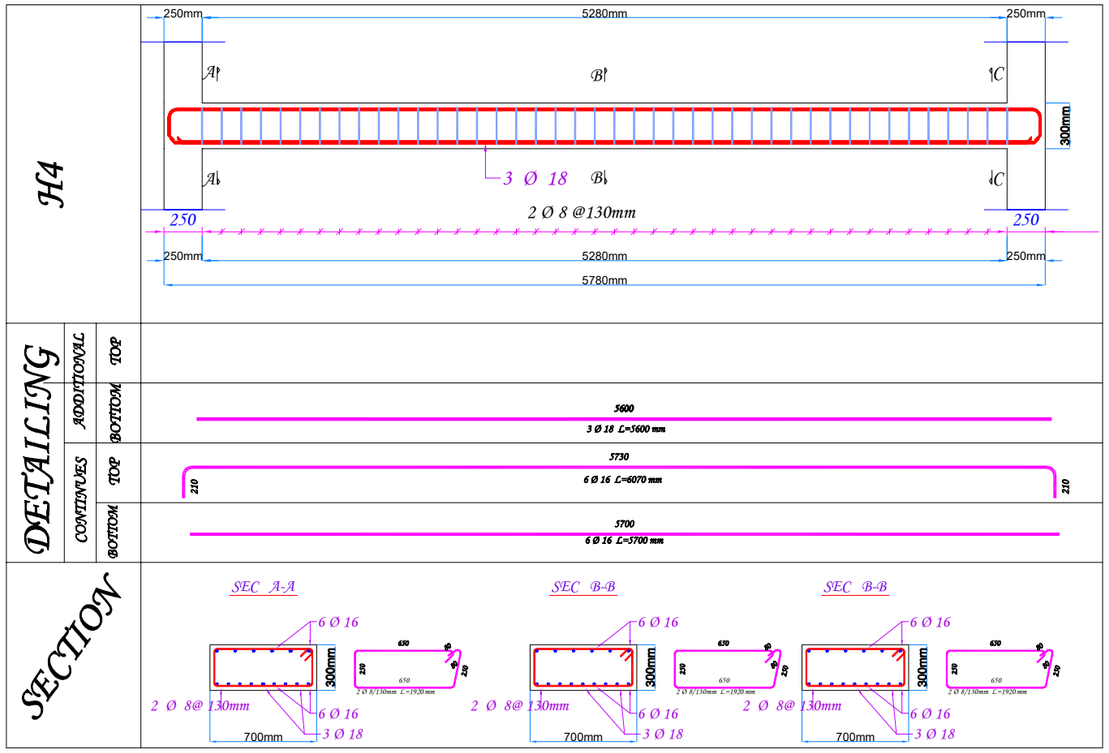

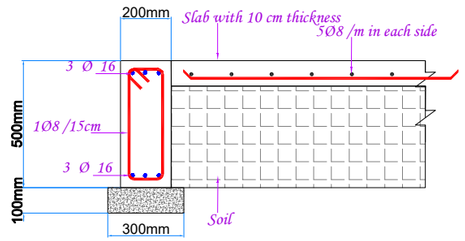

Detail for the ground slab

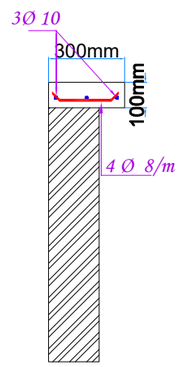

Detail for the Concrete cornice.

REMARKS: –

1. ALL DIMENSIONS AND ELEVATIONS ARE IN CENTIMETERS AND METERS RESPECTIVELY, UNLESS OVER WISE MENTIONED.
2. BUILDING WAS DESIGNED TO SUPPORT ONLY TWO REINFORCEMENT CONCRETE FLOORS AS SHOWED IN THE ARCHITECTURE AND STRUCTURE PLANS.

CONCRETE: –

1. ALL WORKMANSHIP AND MATERIALS SHALL BE IN ACCORDANCE WITH THE SPECIFICATION AND AMERICAN CONCRETE CODE ACI-318M-19 (REINFORCED CONCRETE STRUCTURES).
2. ORDINARY PORTLAND CEMENT SHALL BE USED IN CONCRETE.
3. CONCRETE QUALITY: – MINIMUM CONCRETE CUBE STRENGTH (FC') IS 30 MPA.
4. SIZES OF CONCRETE ELEMENTS DO NOT INCLUDE THICKNESS OF APPLIED FINISHES.

REINFORCEMENT: –

1. YIELDING STRESS OF STEEL IS GRADE 40 ASTM – 280 MPA OR GRADE 40 ASTM – 280 MPA AS STATED IN DRAWING NOTES.

United Nations Development Programme (UNDP)	
Project: A New Building Replacing UNDSS Old Building	
Location: Sana'a- Yemen	
Drawing Title: Details for Beams	
Design By : UNDP Engineering Unit	
Drawing Type: Structure	Status : Tender
Date: 13 April 2022	Drawing No. 14

R.C. SLAB RIBS TABLE DETAILS.

RIBS NO	DIMENSIONS IN CM HEIGHT	WIDTH	LONGITUDINAL REIN. Bottom Rein.	Add Top above Support	TOP REIN.	STIRRUPS	REMARKS
R1	30	12	2 Ø 12	- Ø -	1 Ø 12	1 Ø 8 @ 15 CM	
R2	30	12	2 Ø 14	- Ø -	1 Ø 12	1 Ø 8 @ 15 CM	
R3	30	12	2 Ø 16	2 Ø 14	2 Ø 12	1 Ø 8 @ 15 CM	
R4	30	12	2 Ø 14	- Ø -	2 Ø 12	1 Ø 8 @ 15 CM	
R5	30	12	2 Ø 14	- Ø -	2 Ø 14	1 Ø 8 @ 15 CM	
XRib	30	15	2 Ø 14	- Ø -	2 Ø 14	1 Ø 8 @ 15 CM	

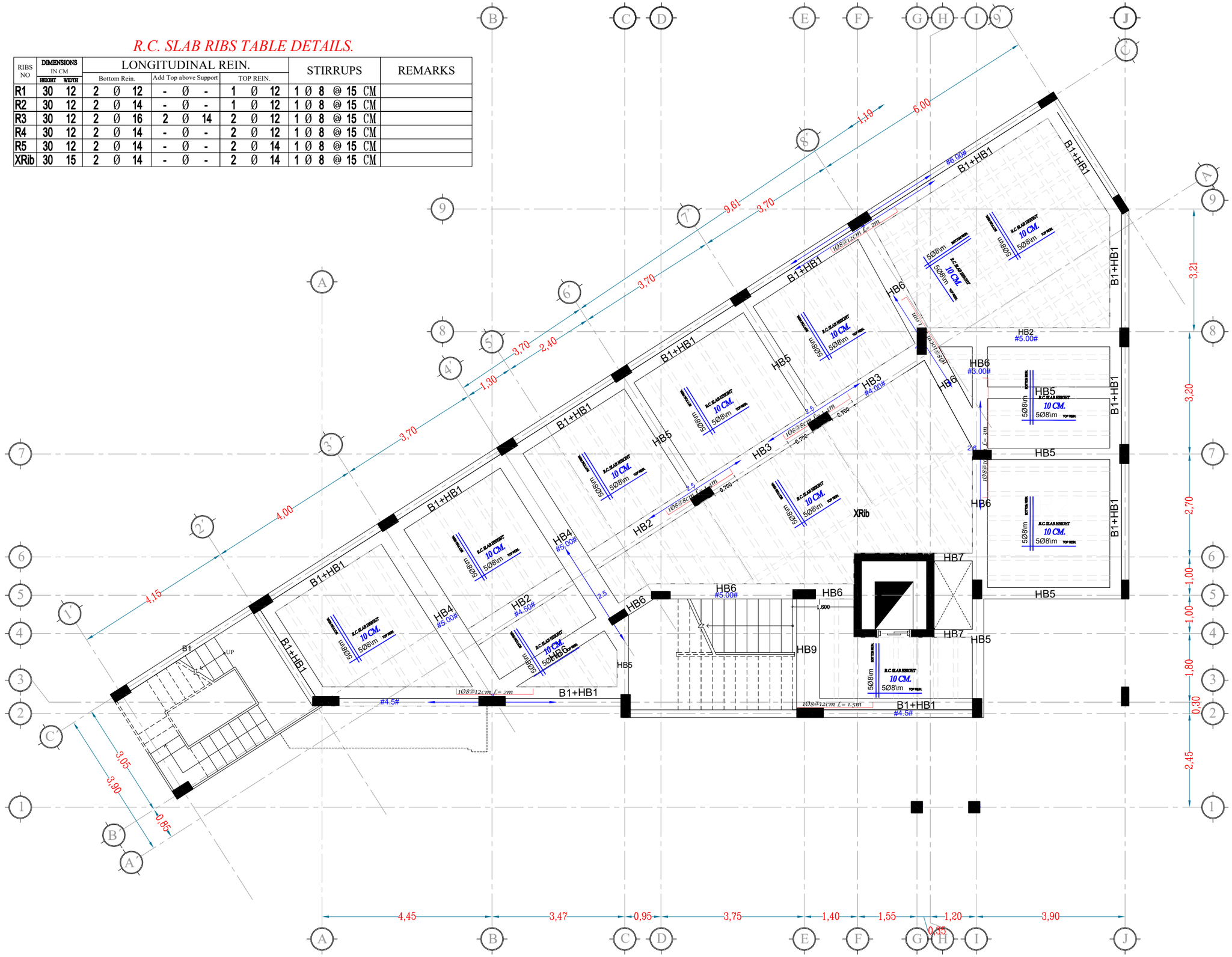

REMARKS: –

1. ALL DIMENSIONS AND ELEVATIONS ARE IN CENTIMETERS AND METERS RESPECTIVELY, UNLESS OVER WISE MENTIONED.
2. BUILDING WAS DESIGNED TO SUPPORT ONLY TWO REINFORCEMENT CONCRETE FLOORS AS SHOWED IN THE ARCHITECTURE AND STRUCTURE PLANS.

CONCRETE: –

1. ALL WORKMANSHIP AND MATERIALS SHALL BE IN ACCORDANCE WITH THE SPECIFICATION AND AMERICAN CONCRETE CODE ACI-318M-19 (REINFORCED CONCRETE STRUCTURES).
2. ORDINARY PORTLAND CEMENT SHALL BE USED IN CONCRETE.
3. CONCRETE QUALITY: – MINIMUM CONCRETE CUBE STRENGTH (FC') IS 30 MPA.
4. SIZES OF CONCRETE ELEMENTS DO NOT INCLUDE THICKNESS OF APPLIED FINISHES.

REINFORCEMENT: –

1. YIELDING STRESS OF STEEL IS GRADE 40 ASTM – 280 MPA OR GRADE 40 ASTM – 280 MPA AS STATED IN DRAWING NOTES.

United Nations Development Programme (UNDP)	
Project: A New Building Replacing UNDSS Old Building	
Location: Sana'a- Yemen	
Drawing Title: Ribbed Slab for the Ground Floor	
Design By : UNDP Engineering Unit	
Drawing Type: Structure	Status : Tender
Date: 13 April 2022	Drawing No. 15

R.C. SLAB RIBS TABLE DETAILS.

RIBS NO	DIMENSIONS IN CM HEIGHT	WIDTH	LONGITUDINAL REIN. Bottom Rein.	Add Top above Support	TOP REIN.	STIRRUPS	REMARKS
R1	30	12	2 Ø 12	- Ø -	1 Ø 12	1 Ø 8 @ 15 CM	
R2	30	12	2 Ø 14	- Ø -	1 Ø 12	1 Ø 8 @ 15 CM	
R3	30	12	2 Ø 16	2 Ø 14	2 Ø 12	1 Ø 8 @ 15 CM	
R4	30	12	2 Ø 14	- Ø -	2 Ø 12	1 Ø 8 @ 15 CM	
R5	30	12	2 Ø 14	- Ø -	2 Ø 14	1 Ø 8 @ 15 CM	
XRib	30	15	2 Ø 14	- Ø -	2 Ø 14	1 Ø 8 @ 15 CM	

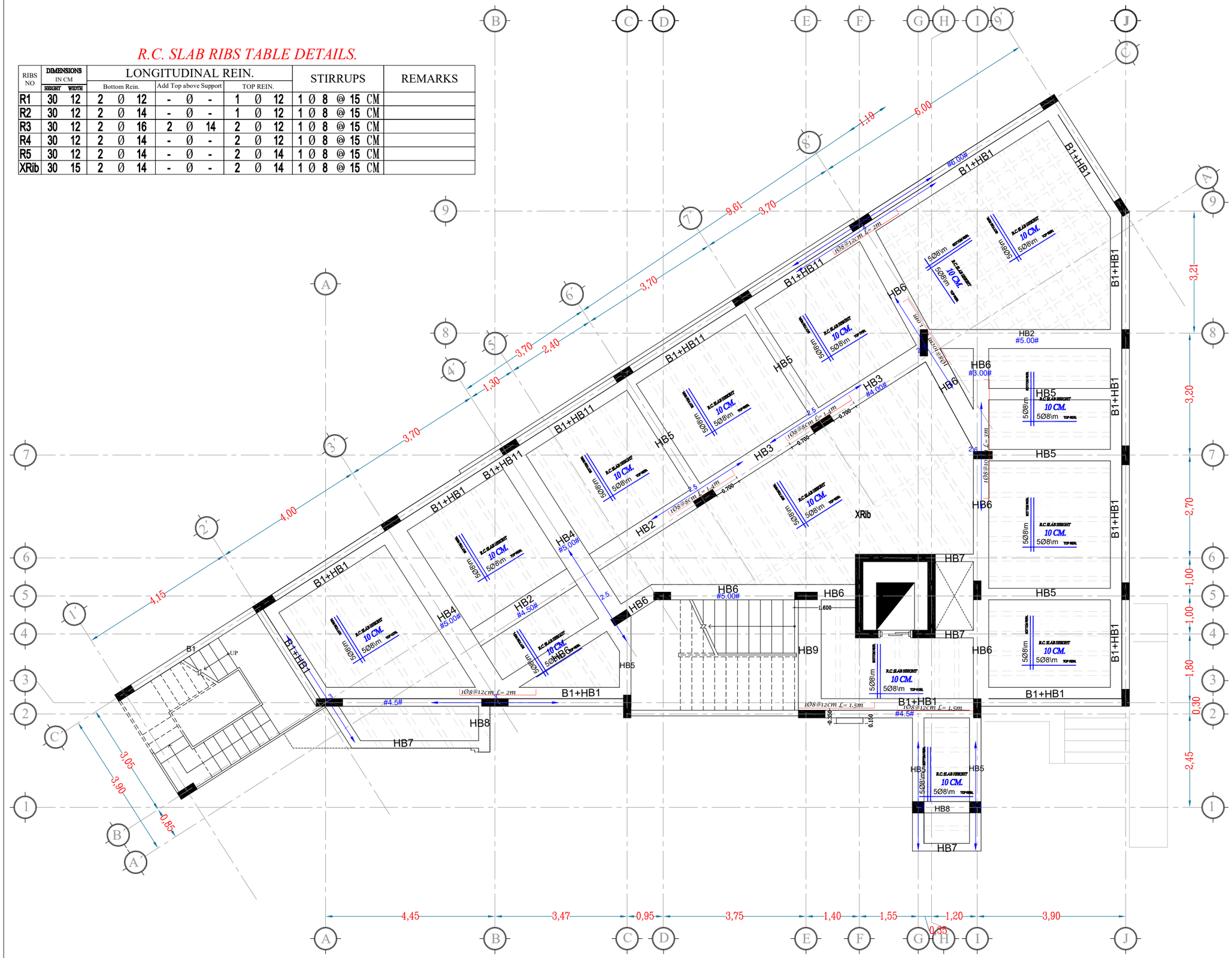

REMARKS: –

1. ALL DIMENSIONS AND ELEVATIONS ARE IN CENTIMETERS AND METERS RESPECTIVELY, UNLESS OVER WISE MENTIONED.
2. BUILDING WAS DESIGNED TO SUPPORT ONLY TWO REINFORCEMENT CONCRETE FLOORS AS SHOWED IN THE ARCHITECTURE AND STRUCTURE PLANS.

CONCRETE: –

1. ALL WORKMANSHIP AND MATERIALS SHALL BE IN ACCORDANCE WITH THE SPECIFICATION AND AMERICAN CONCRETE CODE ACI-318M-19 (REINFORCED CONCRETE STRUCTURES).
2. ORDINARY PORTLAND CEMENT SHALL BE USED IN CONCRETE.
3. CONCRETE QUALITY: – MINIMUM CONCRETE CUBE STRENGTH (FC') IS 30 MPA.
4. SIZES OF CONCRETE ELEMENTS DO NOT INCLUDE THICKNESS OF APPLIED FINISHES.

REINFORCEMENT: –

1. YIELDING STRESS OF STEEL IS GRADE 40 ASTM – 280 MPA OR GRADE 40 ASTM – 280 MPA AS STATED IN DRAWING NOTES.

United Nations Development Programme (UNDP)

Project: A New Building Replacing UNDSS Old Building

Location: Sana'a- Yemen

Drawing Title: Ribbed Slab for the First Floor

Design By : UNDP Engineering Unit

Drawing Type: Structure

Status : Tender

Date: 13 April 2022

Drawing No. 16

R.C. SLAB RIBS TABLE DETAILS.

RIBS NO	DIMENSIONS IN CM HEIGHT	WIDTH	LONGITUDINAL REIN. Bottom Rein.	Add Top above Support	TOP REIN.	STIRRUPS	REMARKS
R1	30	12	2 Ø 12	- Ø -	1 Ø 12	1 Ø 8 @ 15 CM	
R2	30	12	2 Ø 14	- Ø -	1 Ø 12	1 Ø 8 @ 15 CM	
R3	30	12	2 Ø 16	2 Ø 14	2 Ø 12	1 Ø 8 @ 15 CM	
R4	30	12	2 Ø 14	- Ø -	2 Ø 12	1 Ø 8 @ 15 CM	
R5	30	12	2 Ø 14	- Ø -	2 Ø 14	1 Ø 8 @ 15 CM	
XRib	30	15	2 Ø 14	- Ø -	2 Ø 14	1 Ø 8 @ 15 CM	

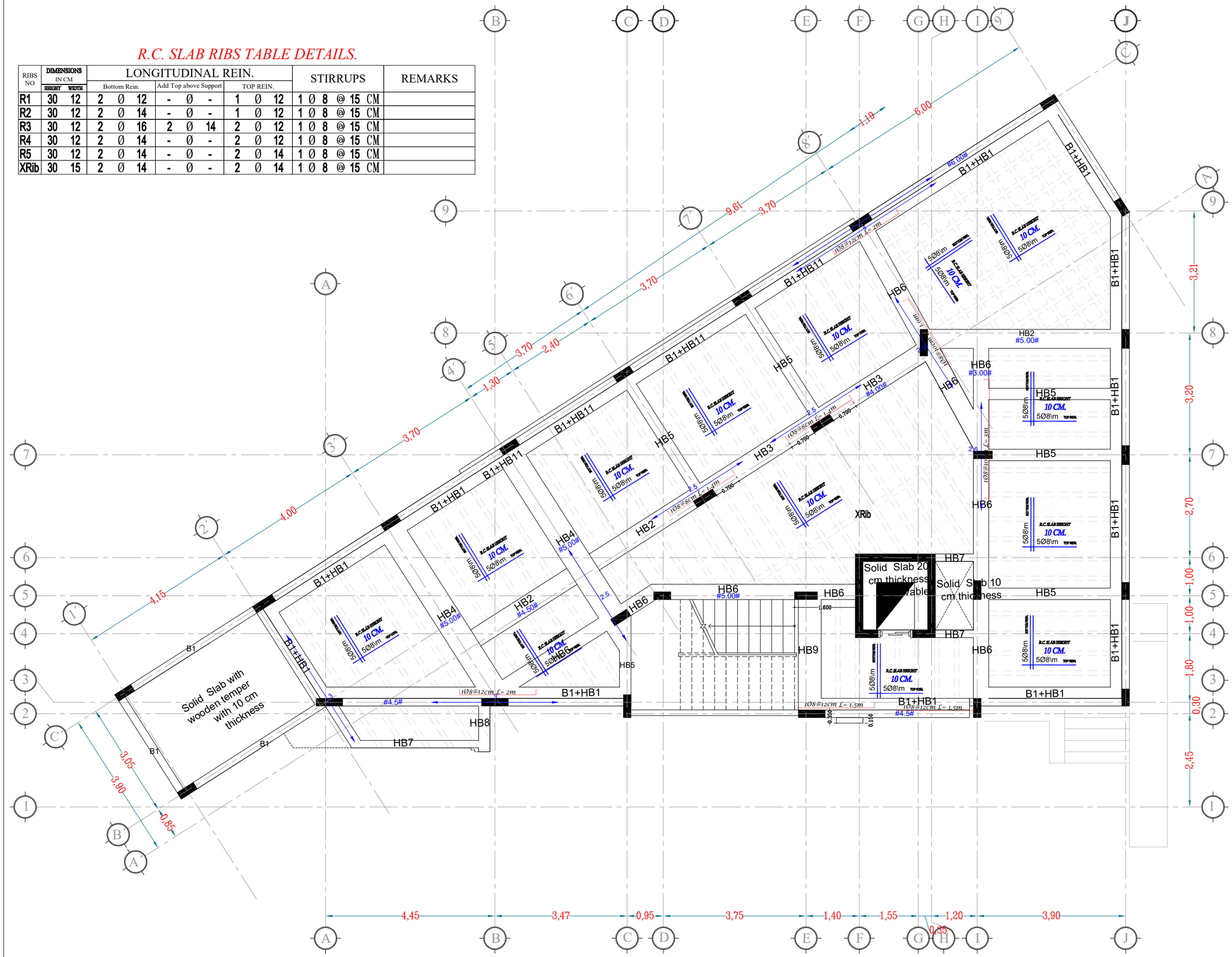

REMARKS: –

1. ALL DIMENSIONS AND ELEVATIONS ARE IN CENTIMETERS AND METERS RESPECTIVELY, UNLESS OVER WISE MENTIONED.
2. BUILDING WAS DESIGNED TO SUPPORT ONLY TWO REINFORCEMENT CONCRETE FLOORS AS SHOWED IN THE ARCHITECTURE AND STRUCTURE PLANS.

CONCRETE: –

1. ALL WORKMANSHIP AND MATERIALS SHALL BE IN ACCORDANCE WITH THE SPECIFICATION AND AMERICAN CONCRETE CODE ACI-318M-19 (REINFORCED CONCRETE STRUCTURES).
2. ORDINARY PORTLAND CEMENT SHALL BE USED IN CONCRETE.
3. CONCRETE QUALITY: – MINIMUM CONCRETE CUBE STRENGTH (FC') IS 30 MPA.
4. SIZES OF CONCRETE ELEMENTS DO NOT INCLUDE THICKNESS OF APPLIED FINISHES.

REINFORCEMENT: –

1. YIELDING STRESS OF STEEL IS GRADE 40 ASTM – 280 MPA OR GRADE 40 ASTM – 280 MPA AS STATED IN DRAWING NOTES.

United Nations Development Programme (UNDP)

Project: A New Building Replacing UNDSS Old Building

Location: Sana'a- Yemen

Drawing Title: Ribbed Slab for the Roof Floor

Design By : UNDP Engineering Unit

Drawing Type: Structure

Status : Tender

Date: 13 April 2022

Drawing No. 17

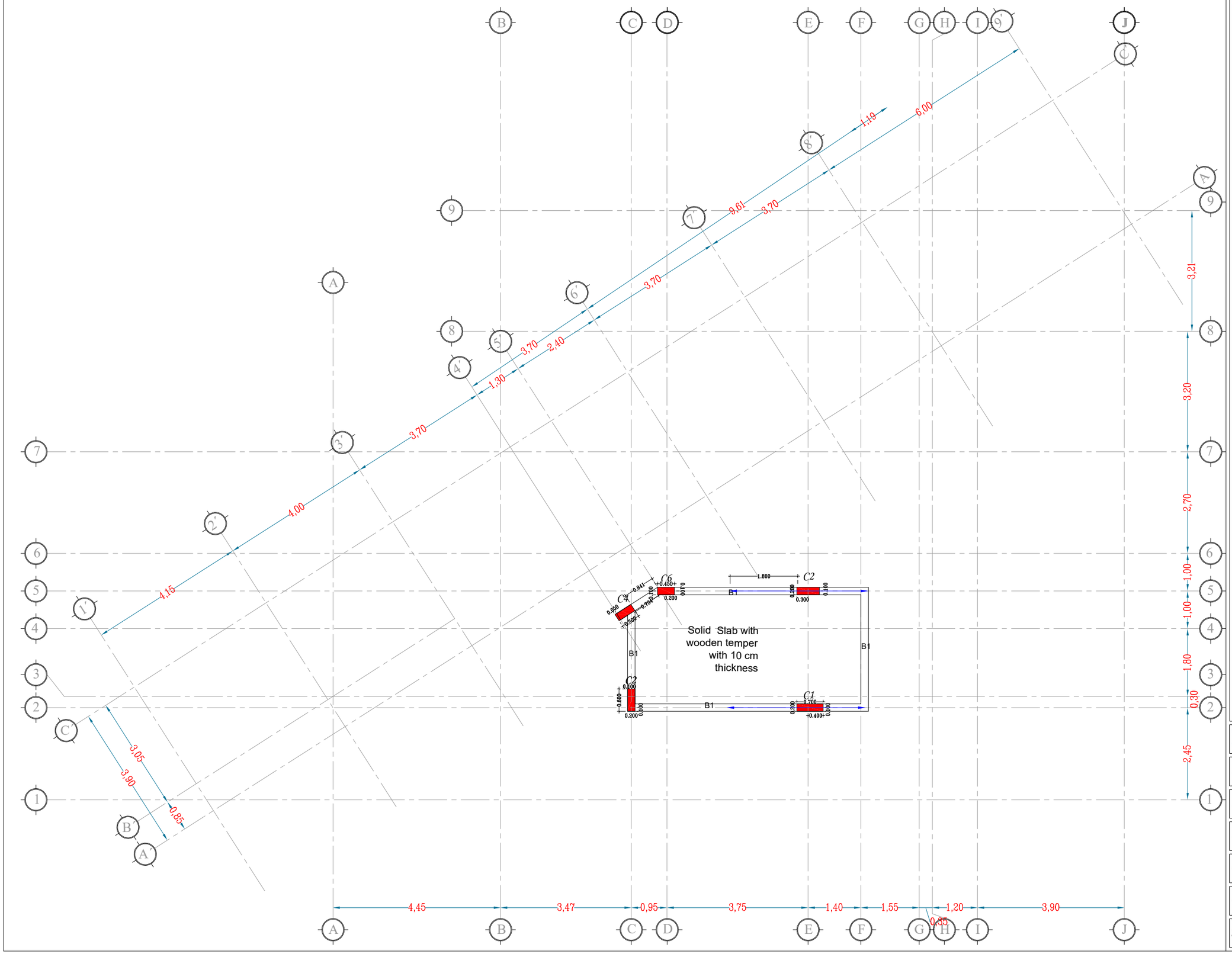

REMARKS: –

1. ALL DIMENSIONS AND ELEVATIONS ARE IN CENTIMETERS AND METERS RESPECTIVELY, UNLESS OVER WISE MENTIONED.
2. BUILDING WAS DESIGNED TO SUPPORT ONLY TWO REINFORCEMENT CONCRETE FLOORS AS SHOWED IN THE ARCHITECTURE AND STRUCTURE PLANS.

CONCRETE: –

1. ALL WORKMANSHIP AND MATERIALS SHALL BE IN ACCORDANCE WITH THE SPECIFICATION AND AMERICAN CONCRETE CODE ACI-318M-19 (REINFORCED CONCRETE STRUCTURES).
2. ORDINARY PORTLAND CEMENT SHALL BE USED IN CONCRETE.
3. CONCRETE QUALITY: – MINIMUM CONCRETE CUBE STRENGTH (FC') IS 30 MPA.
4. SIZES OF CONCRETE ELEMENTS DO NOT INCLUDE THICKNESS OF APPLIED FINISHES.

REINFORCEMENT: –

1. YIELDING STRESS OF STEEL IS GRADE 40 ASTM – 280 MPA OR GRADE 40 ASTM – 280 MPA AS STATED IN DRAWING NOTES.

United Nations Development Programme (UNDP)	
Project: A New Building Replacing UNDSS Old Building	
Location: Sana'a- Yemen	
Drawing Title: Slab for the Roof Floor	
Design By : UNDP Engineering Unit	
Drawing Type: Structure	Status : Tender
Date: 13 April 2022	Drawing No. 18

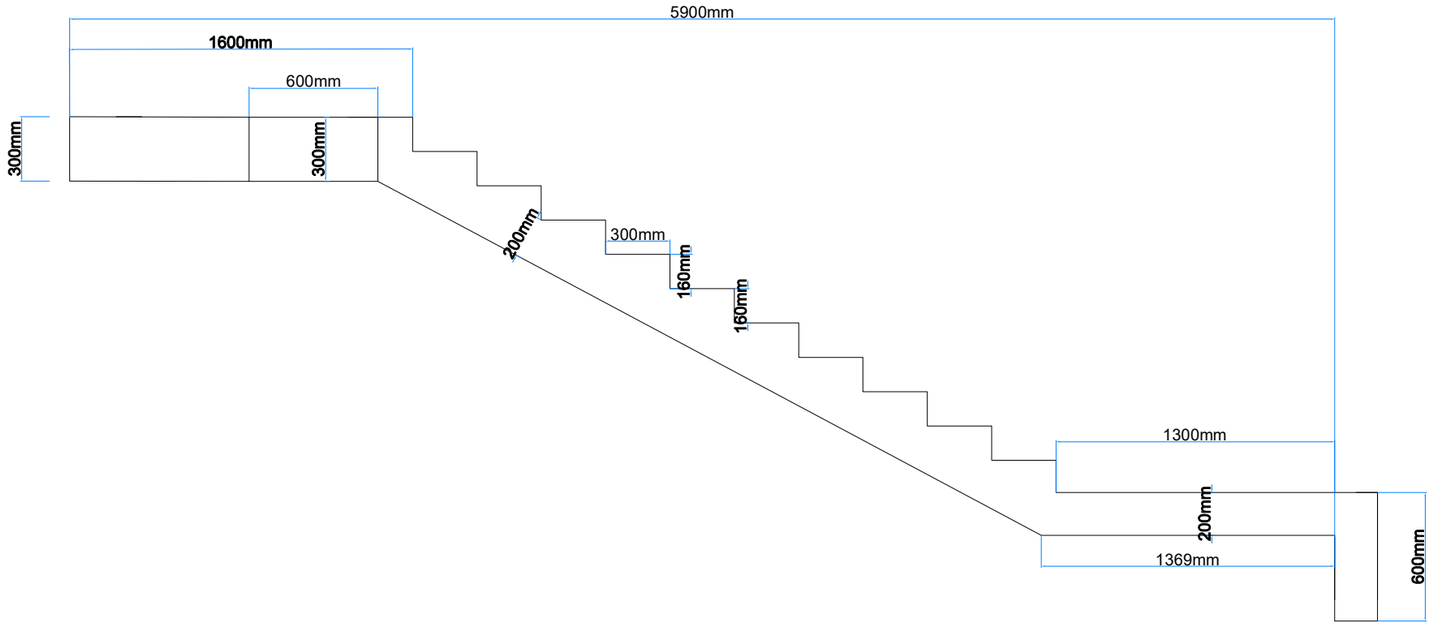

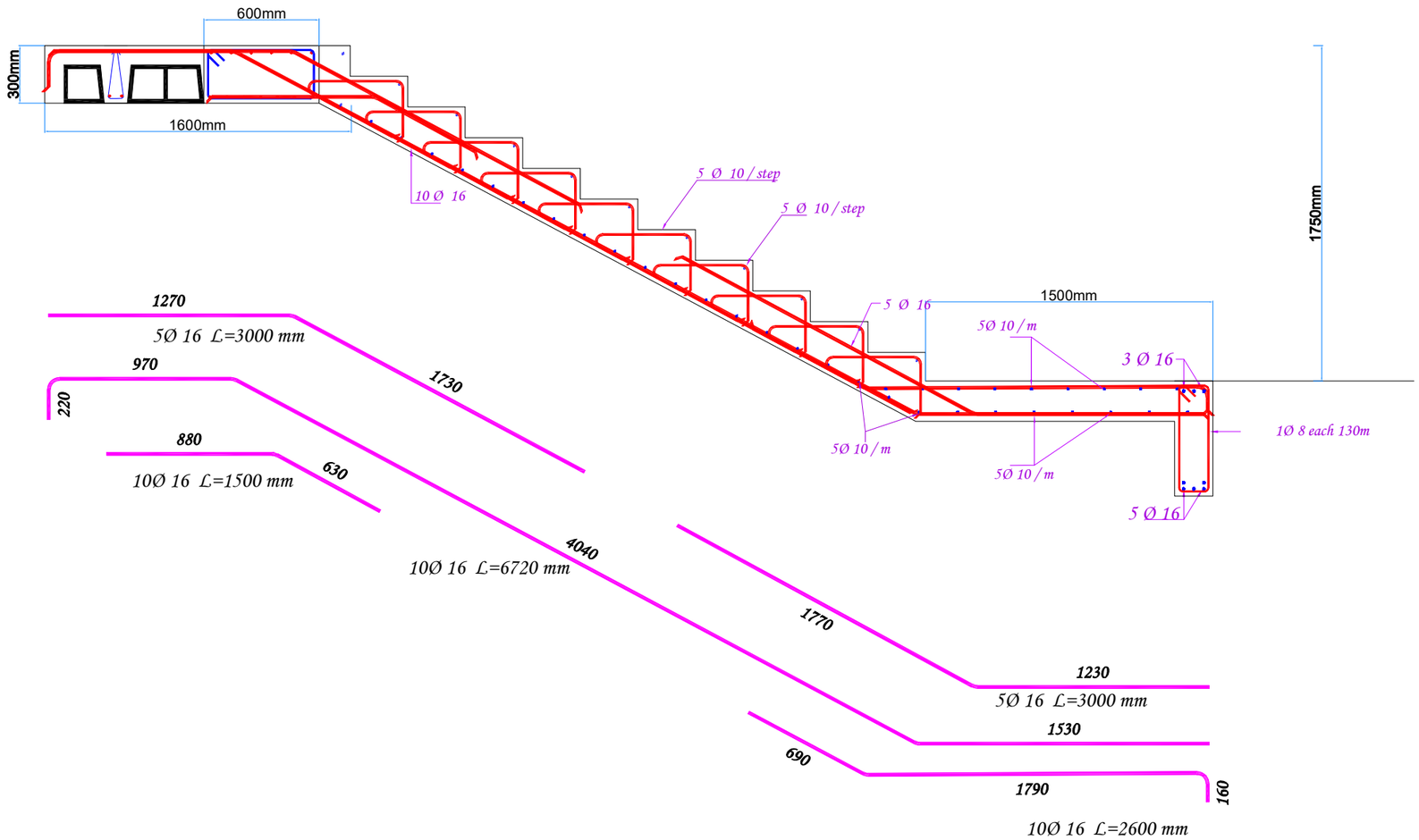

REMARKS: –

1. ALL DIMENSIONS AND ELEVATIONS ARE IN CENTIMETERS AND METERS RESPECTIVELY, UNLESS OVER WISE MENTIONED.
2. BUILDING WAS DESIGNED TO SUPPORT ONLY TWO REINFORCEMENT CONCRETE FLOORS AS SHOWED IN THE ARCHITECTURE AND STRUCTURE PLANS.

CONCRETE: –

1. ALL WORKMANSHIP AND MATERIALS SHALL BE IN ACCORDANCE WITH THE SPECIFICATION AND AMERICAN CONCRETE CODE ACI-318M-19 (REINFORCED CONCRETE STRUCTURES).
2. ORDINARY PORTLAND CEMENT SHALL BE USED IN CONCRETE.
3. CONCRETE QUALITY: – MINIMUM CONCRETE CUBE STRENGTH (FC') IS 30 MPA.
4. SIZES OF CONCRETE ELEMENTS DO NOT INCLUDE THICKNESS OF APPLIED FINISHES.

REINFORCEMENT: –

1. YIELDING STRESS OF STEEL IS GRADE 40 ASTM – 280 MPA OR GRADE 40 ASTM – 280 MPA AS STATED IN DRAWING NOTES.

United Nations Development Programme (UNDP)	
Project: A New Building Replacing UNDSS Old Building	
Location: Sana'a- Yemen	
Drawing Title: Staircase	
Design By : UNDP Engineering Unit	
Drawing Type: Structure	Status : Tender
Date: 13 April 2022	Drawing No. 19

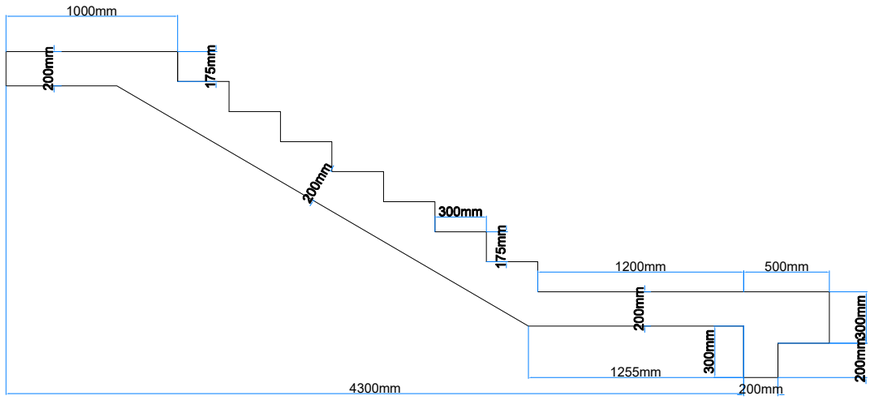

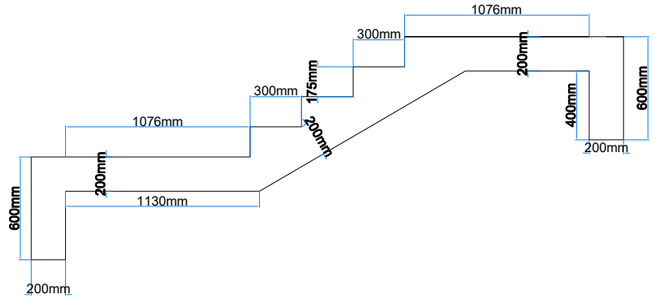

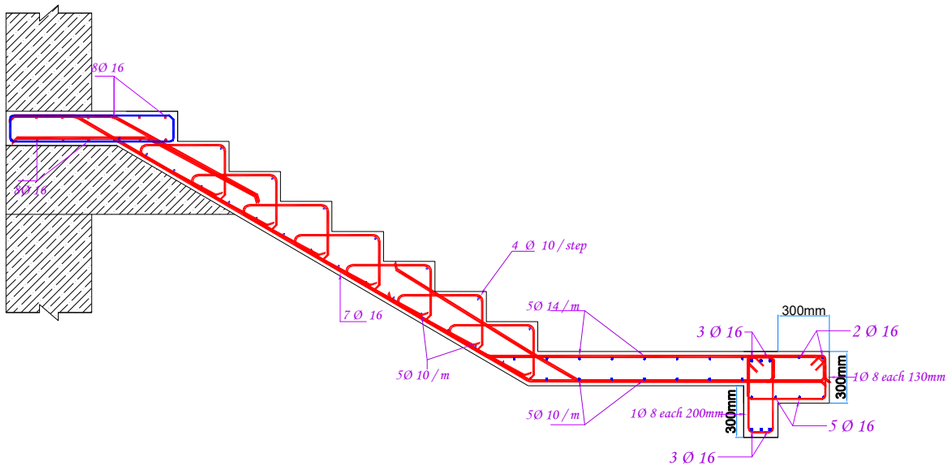

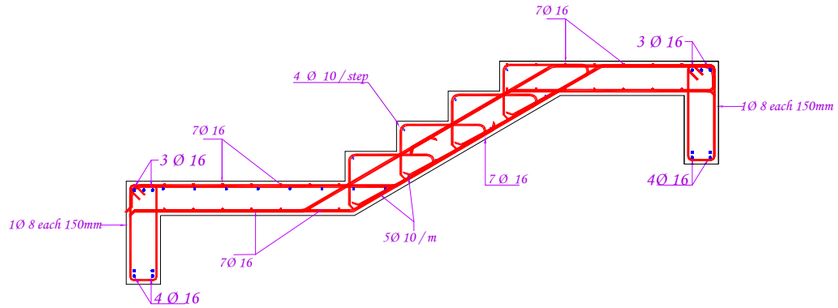

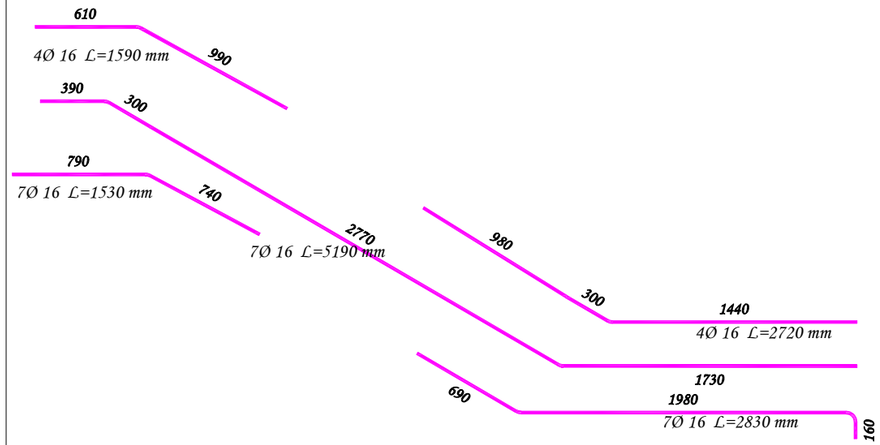

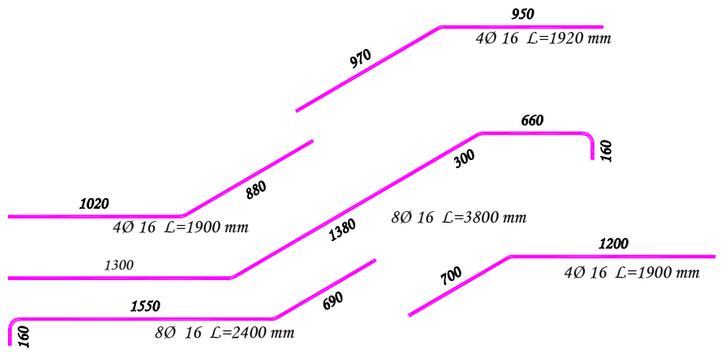

REMARKS: –

1. ALL DIMENSIONS AND ELEVATIONS ARE IN CENTIMETERS AND METERS RESPECTIVELY, UNLESS OVER WISE MENTIONED.
2. BUILDING WAS DESIGNED TO SUPPORT ONLY TWO REINFORCEMENT CONCRETE FLOORS AS SHOWED IN THE ARCHITECTURE AND STRUCTURE PLANS.

CONCRETE: –

1. ALL WORKMANSHIP AND MATERIALS SHALL BE IN ACCORDANCE WITH THE SPECIFICATION AND AMERICAN CONCRETE CODE ACI-318M-19 (REINFORCED CONCRETE STRUCTURES).
2. ORDINARY PORTLAND CEMENT SHALL BE USED IN CONCRETE.
3. CONCRETE QUALITY: – MINIMUM CONCRETE CUBE STRENGTH (FC') IS 30 MPA.
4. SIZES OF CONCRETE ELEMENTS DO NOT INCLUDE THICKNESS OF APPLIED FINISHES.

REINFORCEMENT: –

1. YIELDING STRESS OF STEEL IS GRADE 40 ASTM – 280 MPA OR GRADE 40 ASTM – 280 MPA AS STATED IN DRAWING NOTES.

United Nations Development Programme (UNDP)	
Project: A New Building Replacing UNDSS Old Building	
Location: Sana'a- Yemen	
Drawing Title: Emergency Staircase	
Design By : UNDP Engineering Unit	
Drawing Type: Structure	Status : Tender
Date: 13 April 2022	Drawing No. 20

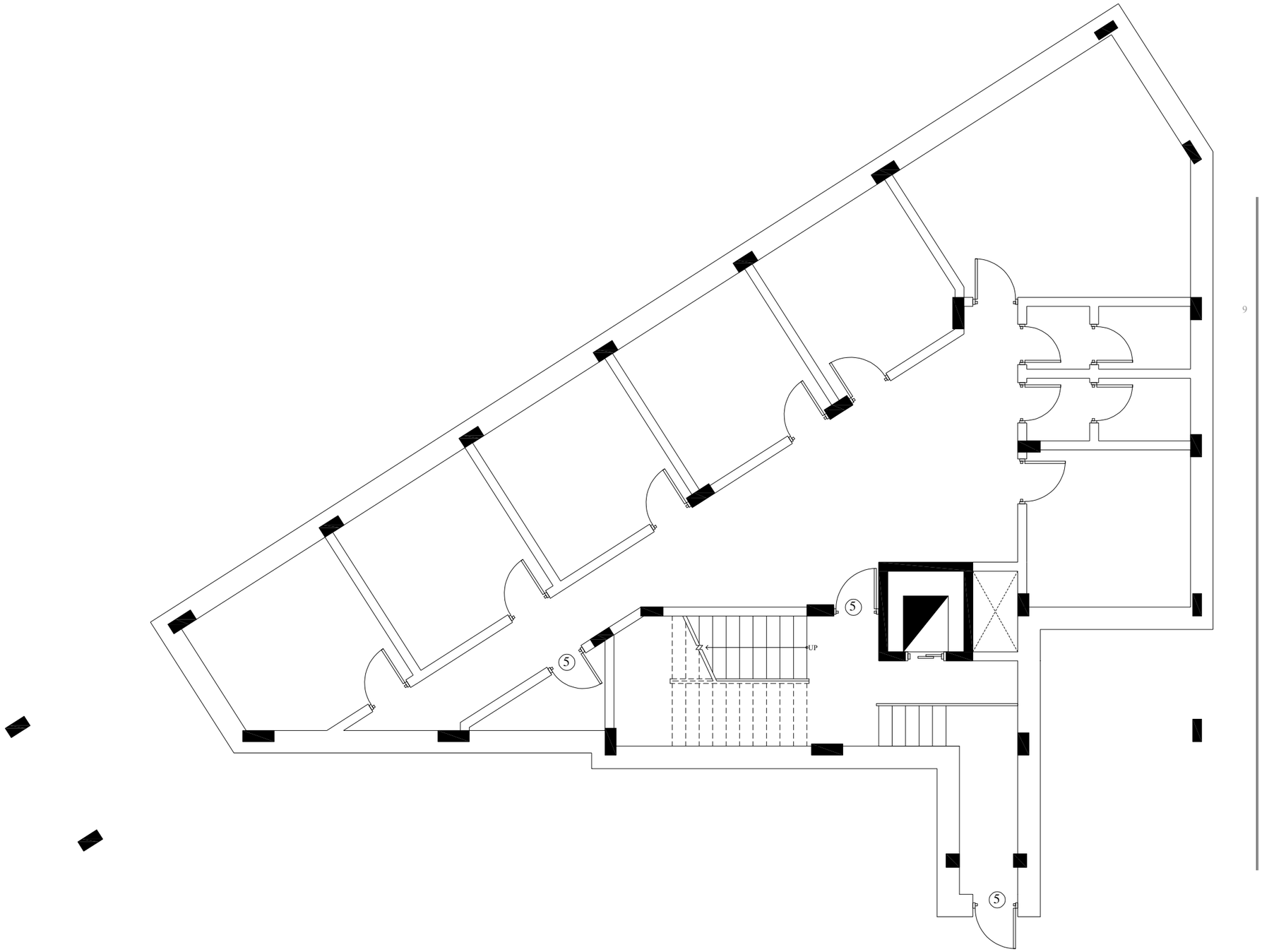

1. Reinforced window frames with steel bolts (Hilti-rated)12mm dia. And 120 mm length into concrete/stone wall each 20 cm.
2. install (Anti-Shatter Resistance Films).
3. Installation frame catcher. as shown in detail 2.
4. Supply and installation of Metal grill for the windows .
5. Arnord Door as shown in detail 1

United Nations Development Programme (UNDP)	
Project:	A New Building Replacing UNDSS Old Building
Location:	Sana'a- Yemen
Drawing Title:	Security Upgrade for Basement
Design By :	UNDP Engineering Unit
Drawing Type: Structure	Status : Tender
Date: 13 April 2022	Drawing No. 21

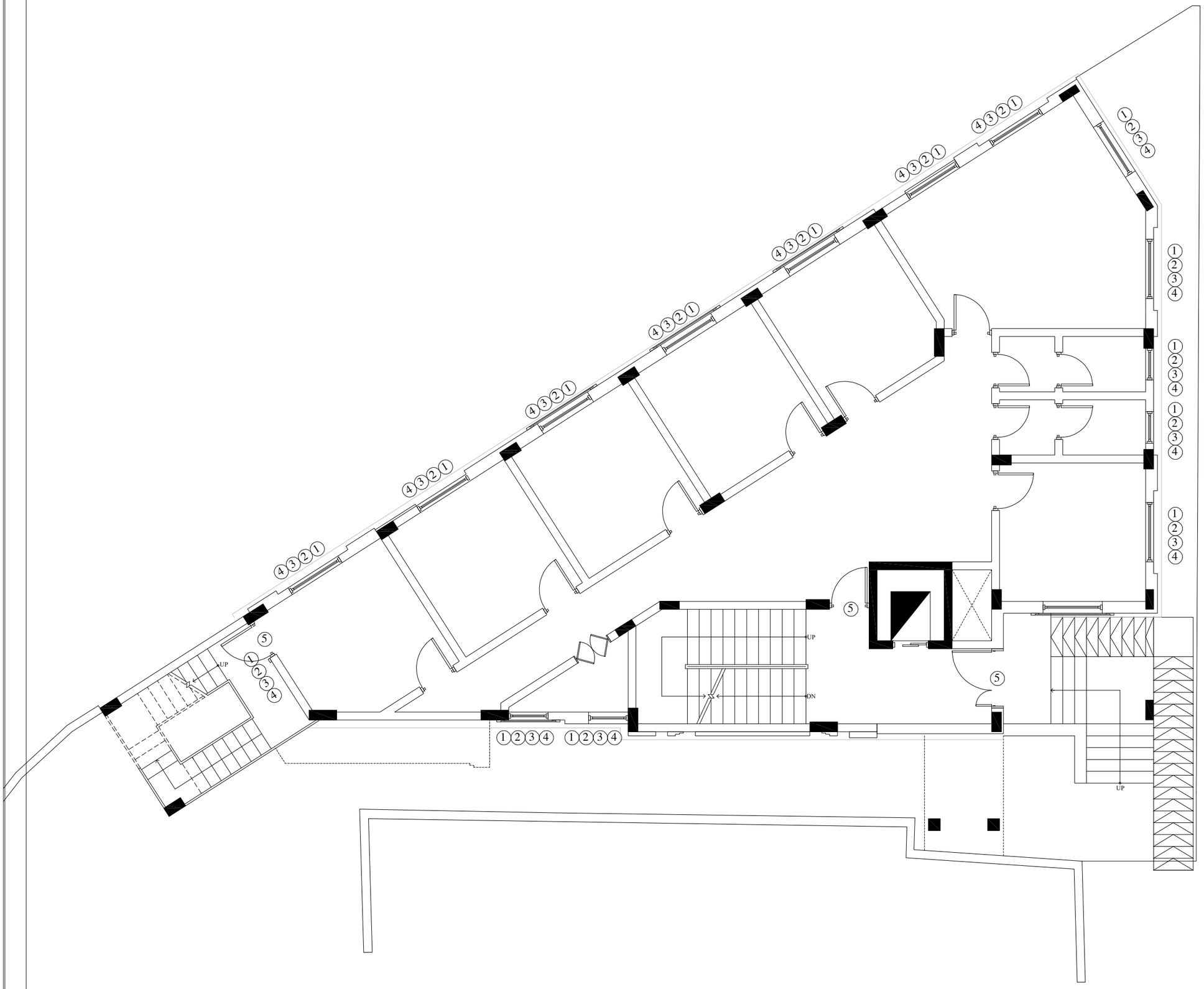

1. *Reinforced window frames with steel bolts (Hilti-rated)12mm dia. And 120 mm length into concrete/stone wall each 20 cm.*
2. *install (Anti-Shatter Resistance Films).*
3. *Installation frame catcher. as shown in detail 2.*
4. *Supply and installation of Metal grill for the windows .*
5. *Arnord Door as shown in detail 1*

United Nations Development Programme (UNDP)	
Project:	*A New Building Replacing UNDSS Old Building*
Location:	*Sana'a- Yemen*
Drawing Title:	*Security Upgrade for Basement*
Design By :	*UNDP Engineering Unit*
Drawing Type: *Structure*	*Status :* *Tender*
Date: 13 April 2022	*Drawing No.* 22

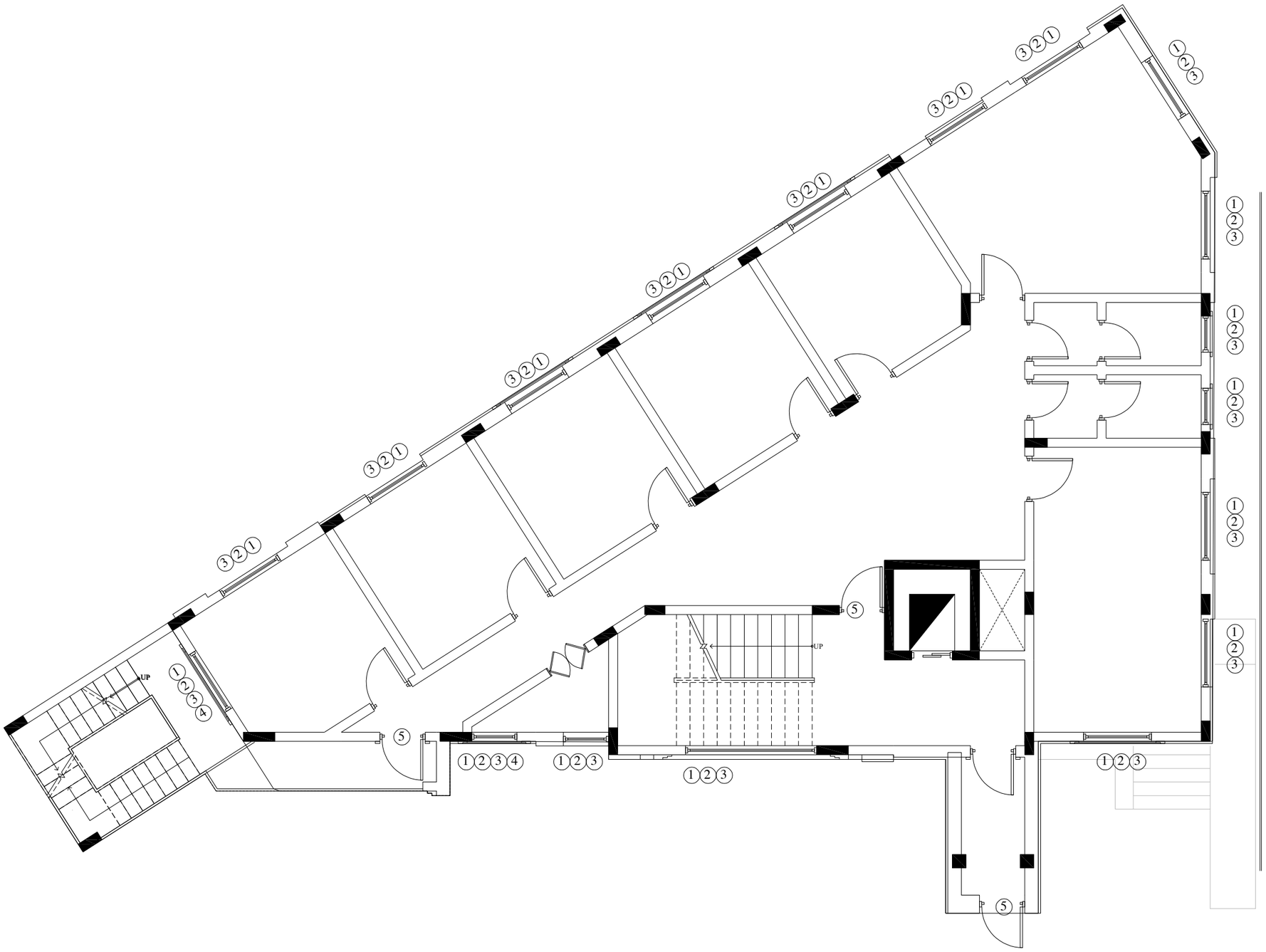

1. Reinforced window frames with steel bolts (Hilti-rated)12mm dia. And 120 mm length into concrete/stone wall each 20 cm.
2. install (Anti-Shatter Resistance Films).
3. Installation frame catcher. as shown in detail 2.
4. Supply and installation of Metal grill for the windows .
5. Arnord Door as shown in detail 1

United Nations Development Programme (UNDP)	
Project:	A New Building Replacing UNDSS Old Building
Location:	Sana'a- Yemen
Drawing Title:	Security Upgrade for Basement
Design By :	UNDP Engineering Unit
Drawing Type: Structure	Status : Tender
Date: 13 April 2022	Drawing No. 23

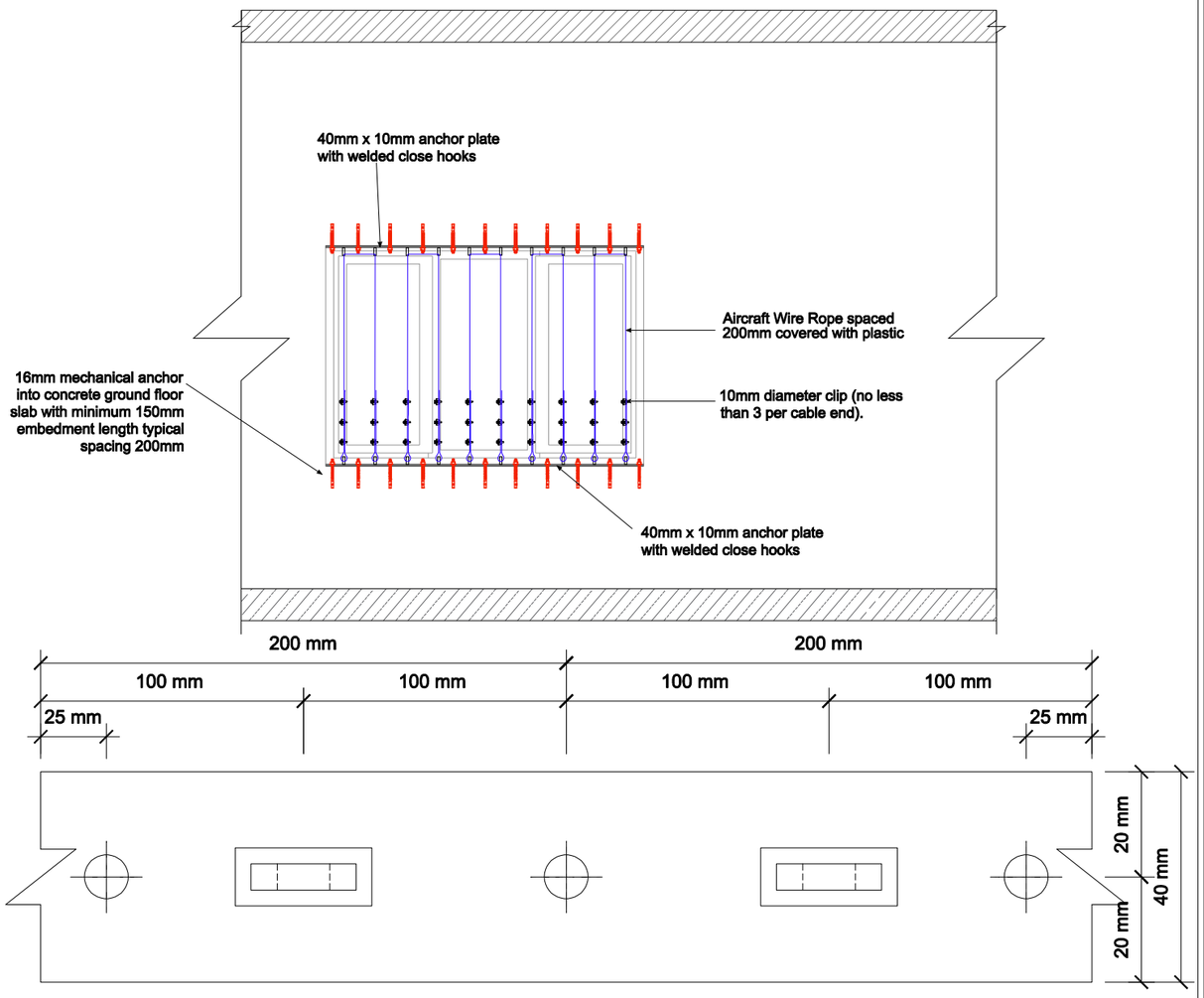

Detail 2 Frame Catcher

United Nations Development Programme (UNDP)

Project: A New Building Replacing UNDSS Old Building

Location: Sana'a- Yemen

Drawing Title: Detail 2 for Frame Catcher

Design By : UNDP Engineering Unit

Drawing Type: Architecture / Structure

Status : Tender

Date: 13 April 2022

Drawing No. 24

ELECTRICAL DRAWINGS

1	*BASEMENT FLOOR LIGHTING SYSTEM*
2	*GROUND FLOOR LIGHTING SYSTEM*
3	*FIRST FLOOR LIGHTING SYSTEM*
4	*SECOND FLOOR LIGHTING SYSTEM*
5	*ROOF FLOOR LIGHTING SYSTEM*
6	*BASEMENT FLOOR POWER SYSTEM*
7	*GROUND FLOOR POWER SYSTEM*
8	*FIRST FLOOR POWER SYSTEM*
9	*SECOND FLOOR POWER SYSTEM*
10	*LIGHTING AND POWER SYSTEMS DBS (NON CRITICAL LOAD)*
11	*HVAC SYSTEM ACDBS*
12	*LIGHTING AND POWER SYSTEMS UDBS (CRITICAL LOAD)*
13	*MCC SINGLE LINE DIAGRAM*
14	*SMDB SINGLE LINE DIAGRAM*
15	*UMDB SINGLE LINE DIAGRAM*
16	*MDB SINGLE LINE DIAGRAM*
17	EARTHING SYSTEM
18	LIGHTNING SYSTEM
19	EARTHING SYSTEM DETAILS

United Nations Development Programme (UNDP)

Project: *NEW BUILDING REPLACING UNDSS OLD BUILDING*

Location: *SANAA - Yemen*

Drawing Title: *DRAWING LIST*

Design By : *UNDP Engineering Unit*

Drawing Type: *Electrical*

Status : *Tender*

Date: *13 APRIL 2021*

Drawing No. 0

LEGEND	DESCRIPTION
	60x60 LED LIGHTING LUMINARE WITH FIXTURE (NON CRITICAL LOAD)
	60x60 LED LIGHTING LUMINARE WITH FIXTURE (CRITICAL LOAD)
	SURFACE WALL MOUNTED MIRROR LIGHTING
	12W RECESSED CEILING DOWNLIGHTPANEL
	22W RECESSED CEILING DOWNLIGHTPANEL
	WALL MOUNTED OUTDOOR 100W LIGHTING FIXTURE
	FINAL DISTRIBUTION BOARD
	DECORATED DIRECT AND INDIRECT LIGHTING LUMINAIRE WITH IP54
	22W RECESSED WALL MOUNTED EXTERNAL LIGHTING LUMINAIRE
	ONE, TWO, THREE GANG ONE WAY
	ONE, TWO, THREE GANG TWO WAY
EXIT	WALL MOUNTED SELF CONTAIN EXIT LIGHTING FIXTURE WITH 3HOUR DURATION BATTERY
EXIT	CEILING MOUNTED SELF CONTAIN EXIT LIGHTING FIXTURE WITH 3HOUR DURATION BATTERY

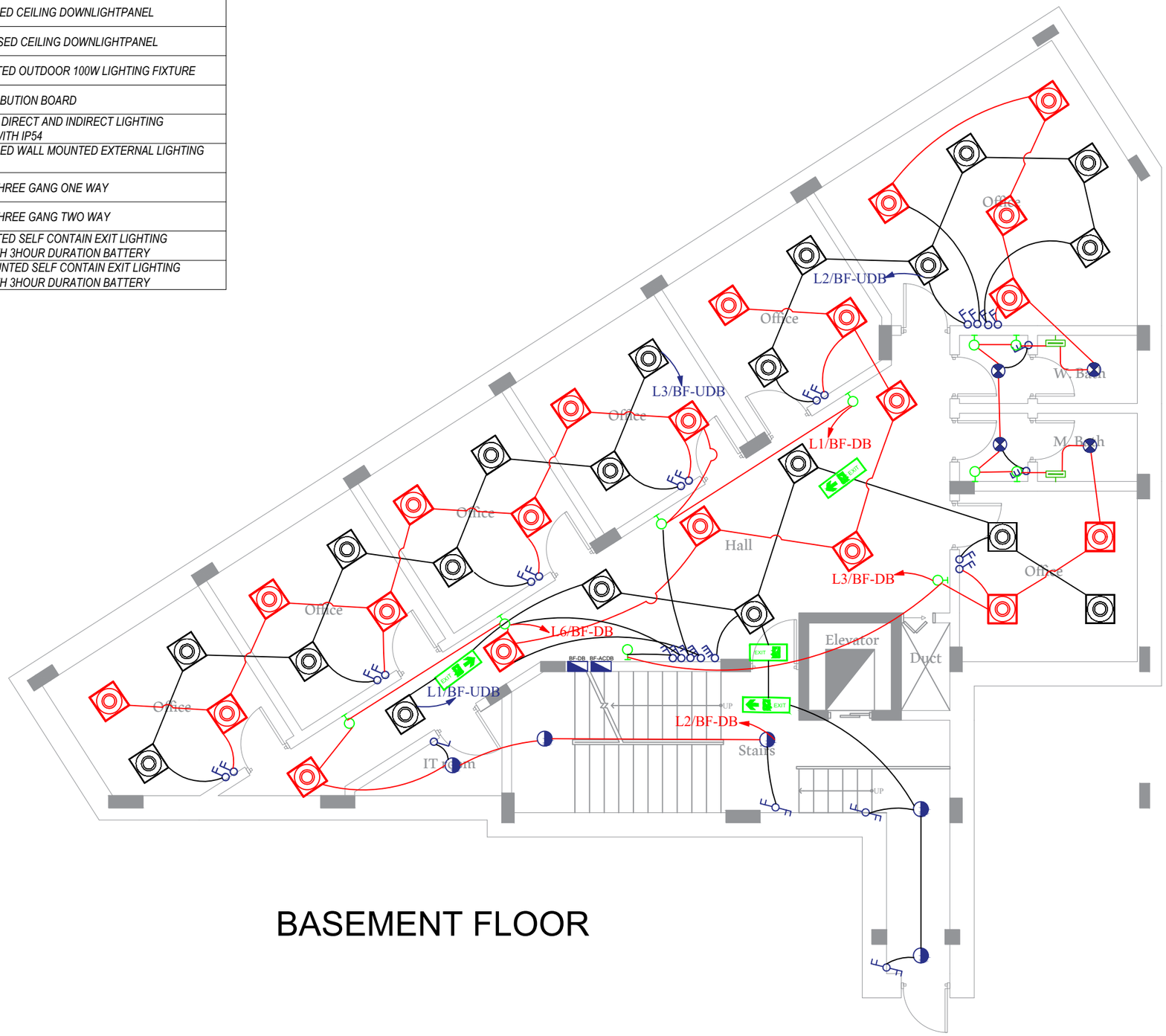

BASEMENT FLOOR

United Nations Development Programme (UNDP)

Project: NEW BUILDING REPLACING UNDSS OLD BUILDING

Location: SANAA - Yemen

Drawing Title: BASEMENT FLOOR LIGHTING SYSTEM

Design By : UNDP Engineering Unit

Drawing Type: Electrical

Status : Tender

Date: 13 APRIL 2021

Drawing No. 1

LEGEND	DESCRIPTION
	60x60 LED LIGHTING LUMINARE WITH FIXTURE (NON CRITICAL LOAD)
	60x60 LED LIGHTING LUMINARE WITH FIXTURE (CRITICAL LOAD)
	SURFACE WALL MOUNTED MIRROR LIGHTING
	12W RECESSED CEILING DOWNLIGHTPANEL
	22W RECESSED CEILING DOWNLIGHTPANEL
	WALL MOUNTED OUTDOOR 100W LIGHTING FIXTURE
	SUB-DISTRIBUTION BOARD
	DECORATED DIRECT AND INDIRECT LIGHTING LUMINAIRE WITH IP54
	22W RECESSED WALL MOUNTED EXTERNAL LIGHTING LUMINAIRE
	ONE, TWO, THREE GANG ONE WAY
	ONE, TWO, THREE GANG TWO WAY
EXIT	WALL MOUNTED SELF CONTAIN EXIT LIGHTING FIXTURE WITH 3HOUR DURATION BATTERY
EXIT	CEILING MOUNTED SELF CONTAIN EXIT LIGHTING FIXTURE WITH 3HOUR DURATION BATTERY

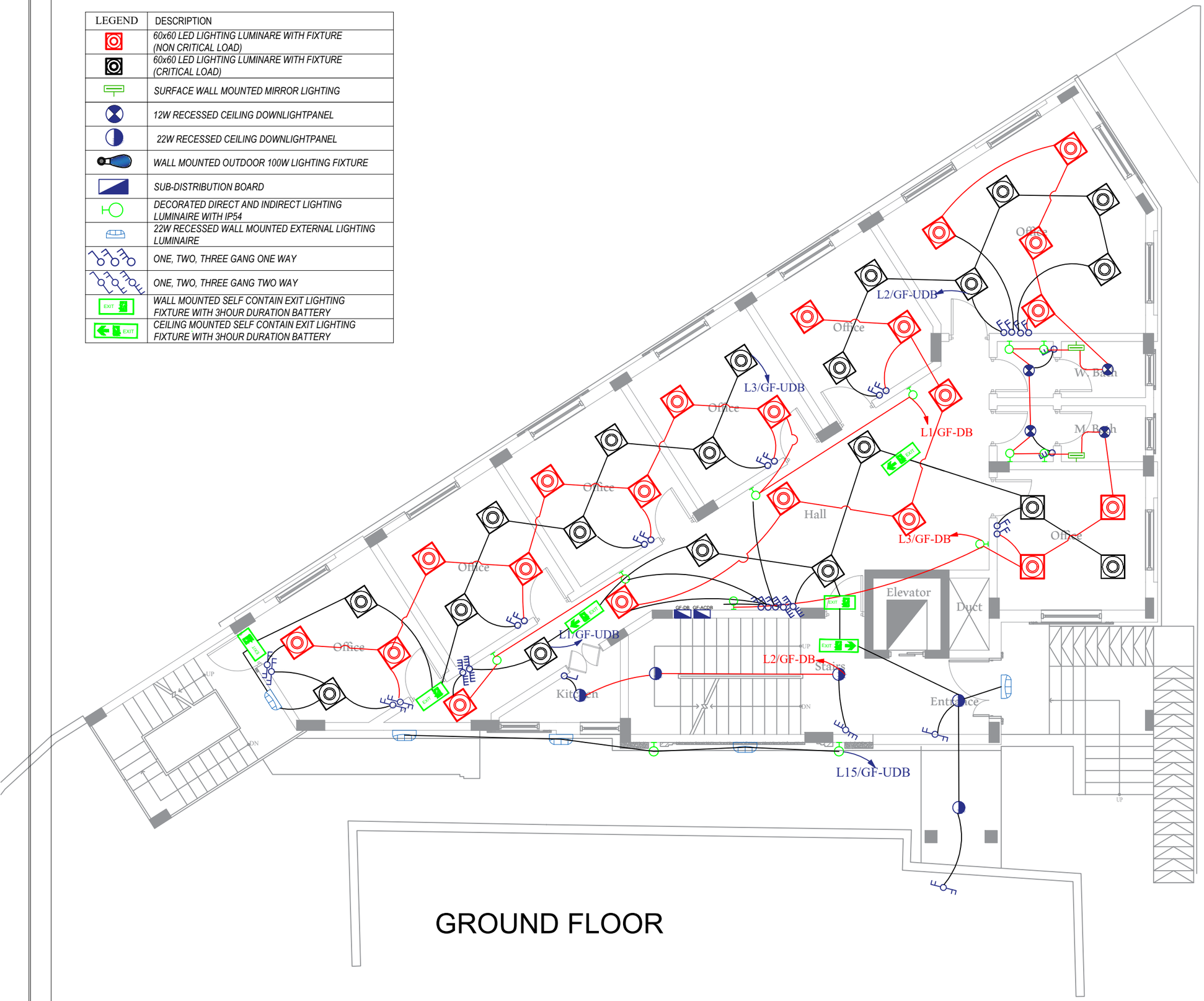

GROUND FLOOR

United Nations Development Programme (UNDP)

Project: NEW BUILDING REPLACING UNDSS OLD BUILDING

Location: SANAA - Yemen

Drawing Title: GROUND FLOOR LIGHTING SYSTEM

Design By : UNDP Engineering Unit

Drawing Type: Electrical

Status : Tender

Date: 13 APRIL 2021

Drawing No. 2

LEGEND	DESCRIPTION
	60x60 LED LIGHTING LUMINARE WITH FIXTURE (NON CRITICAL LOAD)
	60x60 LED LIGHTING LUMINARE WITH FIXTURE (CRITICAL LOAD)
	SURFACE WALL MOUNTED MIRROR LIGHTING
	12W RECESSED CEILING DOWNLIGHTPANEL
	22W RECESSED CEILING DOWNLIGHTPANEL
	WALL MOUNTED OUTDOOR 100W LIGHTING FIXTURE
	SUB-DISTRIBUTION BOARD
	DECORATED DIRECT AND INDIRECT LIGHTING LUMINAIRE WITH IP54
	22W RECESSED WALL MOUNTED EXTERNAL LIGHTING LUMINAIRE
	ONE, TWO, THREE GANG ONE WAY
	ONE, TWO, THREE GANG TWO WAY
EXIT	WALL MOUNTED SELF CONTAIN EXIT LIGHTING FIXTURE WITH 3HOUR DURATION BATTERY
EXIT	CEILING MOUNTED SELF CONTAIN EXIT LIGHTING FIXTURE WITH 3HOUR DURATION BATTERY

FIRST FLOOR

United Nations Development Programme (UNDP)

Project: NEW BUILDING REPLACING UNDSS OLD BUILDING

Location: SANAA - Yemen

Drawing Title: FIRST FLOOR LIGHTING SYSTEM

Design By : UNDP Engineering Unit

Drawing Type: Electrical

Status : Tender

Date: 13 APRIL 2021

Drawing No. 3

SECOND FLOOR

United Nations Development Programme (UNDP)

Project: NEW BUILDING REPLACING UNDSS OLD BUILDING

Location: SANAA - Yemen

Drawing Title: SECOND FLOOR LIGHTING SYSTEM

Design By : UNDP Engineering Unit

Drawing Type: Electrical

Status : Tender

Date: 13 APRIL 2021

Drawing No. 4

LEGEND	DESCRIPTION
	60x60 LED LIGHTING LUMINARE WITH FIXTURE (NON CRITICAL LOAD)
	60x60 LED LIGHTING LUMINARE WITH FIXTURE (CRITICAL LOAD)
	SURFACE WALL MOUNTED MIRROR LIGHTING
	12W RECESSED CEILING DOWNLIGHTPANEL
	22W RECESSED CEILING DOWNLIGHTPANEL
	WALL MOUNTED OUTDOOR 100W LIGHTING FIXTURE
	SUB-DISTRIBUTION BOARD
	DECORATED DIRECT AND INDIRECT LIGHTING LUMINAIRE WITH IP54
	22W RECESSED WALL MOUNTED EXTERNAL LIGHTING LUMINAIRE
	ONE, TWO, THREE GANG ONE WAY
	ONE, TWO, THREE GANG TWO WAY
EXIT	WALL MOUNTED SELF CONTAIN EXIT LIGHTING FIXTURE WITH 3HOUR DURATION BATTERY
EXIT	CEILING MOUNTED SELF CONTAIN EXIT LIGHTING FIXTURE WITH 3HOUR DURATION BATTERY

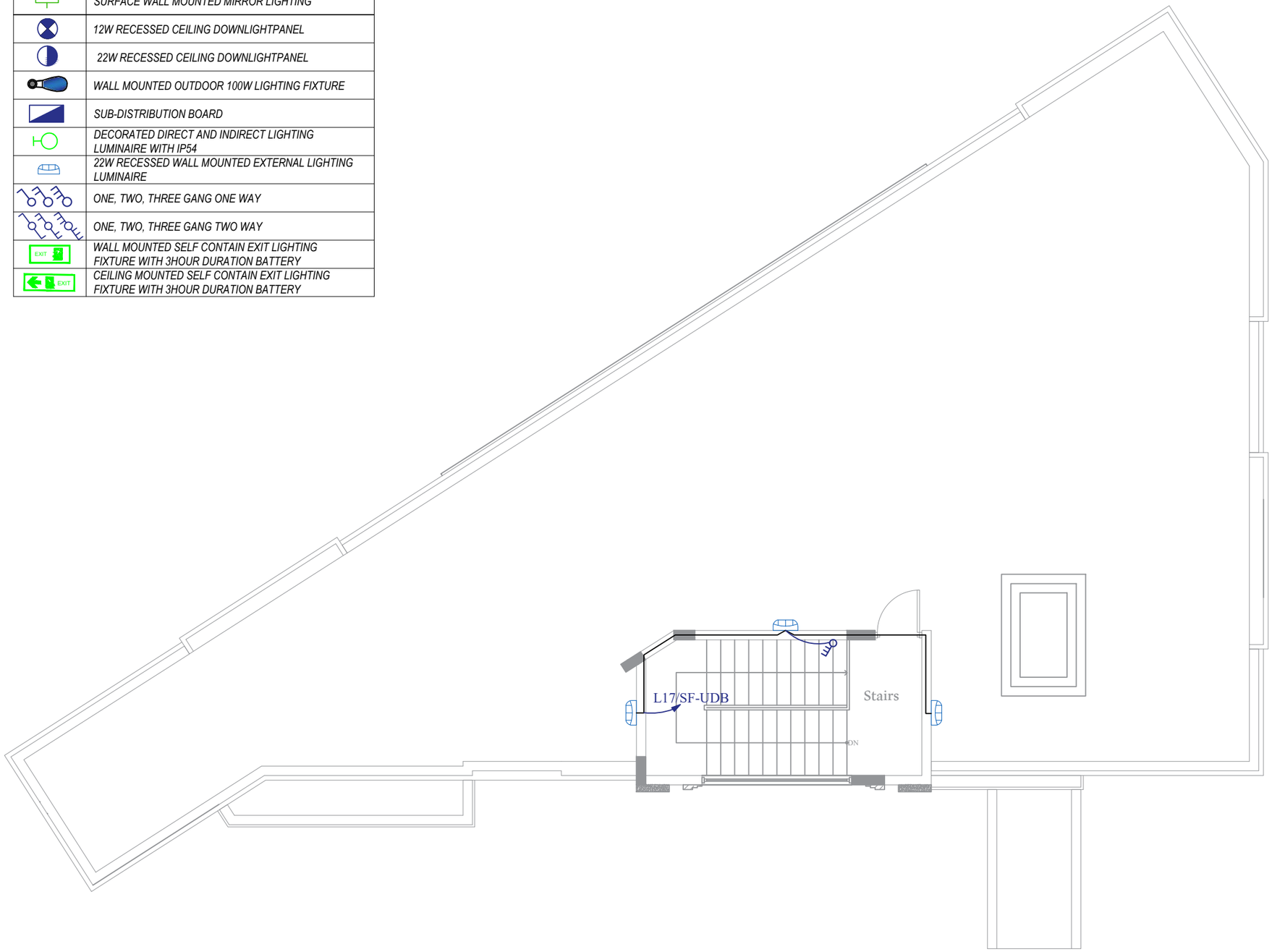

United Nations Development Programme (UNDP)

Project: NEW BUILDING REPLACING UNDSS OLD BUILDING

Location: SANAA - Yemen

Drawing Title: ROOF FLOOR LIGHTING SYSTEM

Design By : UNDP Engineering Unit

Drawing Type: Electrical

Status : Tender

Date: 13 APRIL 2021

Drawing No. 5

LEGEND	DESCRIPTION
	13A SINGLE UNIVERSAL 3PIN SOCKET WITH SHUTTER (NON-CRITICAL LOAD)
	13A DOUBLE UNIVERSAL 3PIN SOCKET WITH SHUTTER (CRITICAL LOAD)
	13A SINGLE UNIVERSAL 3PIN SOCKET WITH SHUTTER (NON-CRITICAL LOAD) IP44
	16A SINGLE 3PIN SOCKET WITH SHUTTER (NON-CRITICAL LOAD) IP44
	FINAL DISTRIBUTION BOARD
	MAIN / SUBMAIN DISTRIBUTION BOARD

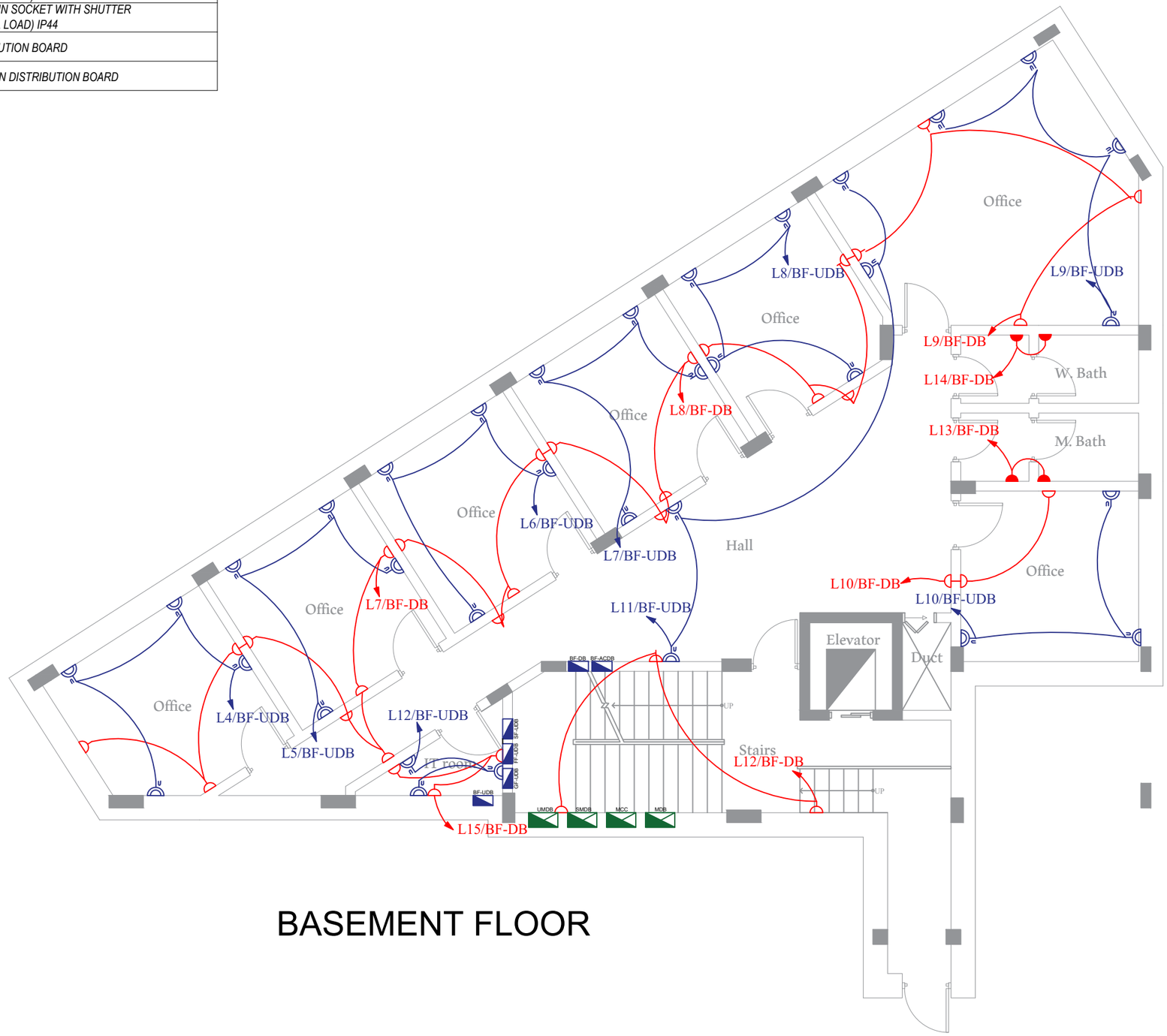

BASEMENT FLOOR

United Nations Development Programme (UNDP)

Project: NEW BUILDING REPLACING UNDSS OLD BUILDING

Location: SANAA - Yemen

Drawing Title: BASEMENT FLOOR POWER SYSTEM

Design By : UNDP Engineering Unit

Drawing Type: Electrical

Status : Tender

Date: 13 APRIL 2021

Drawing No. 6

LEGEND	DESCRIPTION
	13A SINGLE UNIVERSAL 3PIN SOCKET WITH SHUTTER (NON-CRITICAL LOAD)
	13A DOUBLE UNIVERSAL 3PIN SOCKET WITH SHUTTER (CRITICAL LOAD)
	13A SINGLE UNIVERSAL 3PIN SOCKET WITH SHUTTER (NON-CRITICAL LOAD) IP44
	16A SINGLE 3PIN SOCKET WITH SHUTTER (NON-CRITICAL LOAD) IP44
	FINAL DISTRIBUTION BOARD
	MAIN / SUBMAIN DISTRIBUTION BOARD

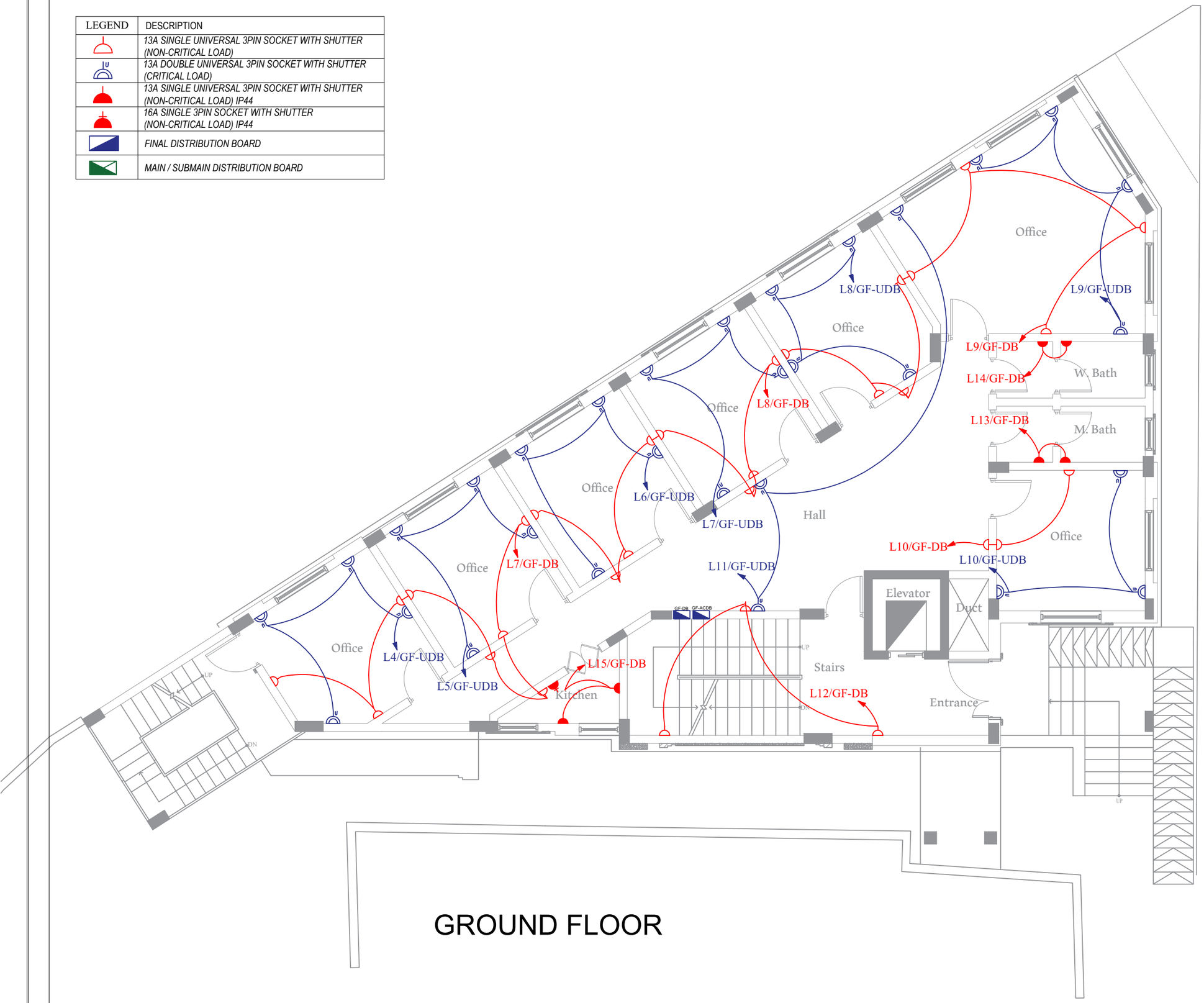

GROUND FLOOR

United Nations Development Programme (UNDP)

Project: NEW BUILDING REPLACING UNDSS OLD BUILDING

Location: SANAA - Yemen

Drawing Title: GROUND FLOOR POWER SYSTEM

Design By : UNDP Engineering Unit

Drawing Type: Electrical

Status : Tender

Date: 13 APRIL 2021

Drawing No. 7

LEGEND	DESCRIPTION
	13A SINGLE UNIVERSAL 3PIN SOCKET WITH SHUTTER (NON-CRITICAL LOAD)
	13A DOUBLE UNIVERSAL 3PIN SOCKET WITH SHUTTER (CRITICAL LOAD)
	13A SINGLE UNIVERSAL 3PIN SOCKET WITH SHUTTER (NON-CRITICAL LOAD) IP44
	16A SINGLE 3PIN SOCKET WITH SHUTTER (NON-CRITICAL LOAD) IP44
	FINAL DISTRIBUTION BOARD
	MAIN / SUBMAIN DISTRIBUTION BOARD

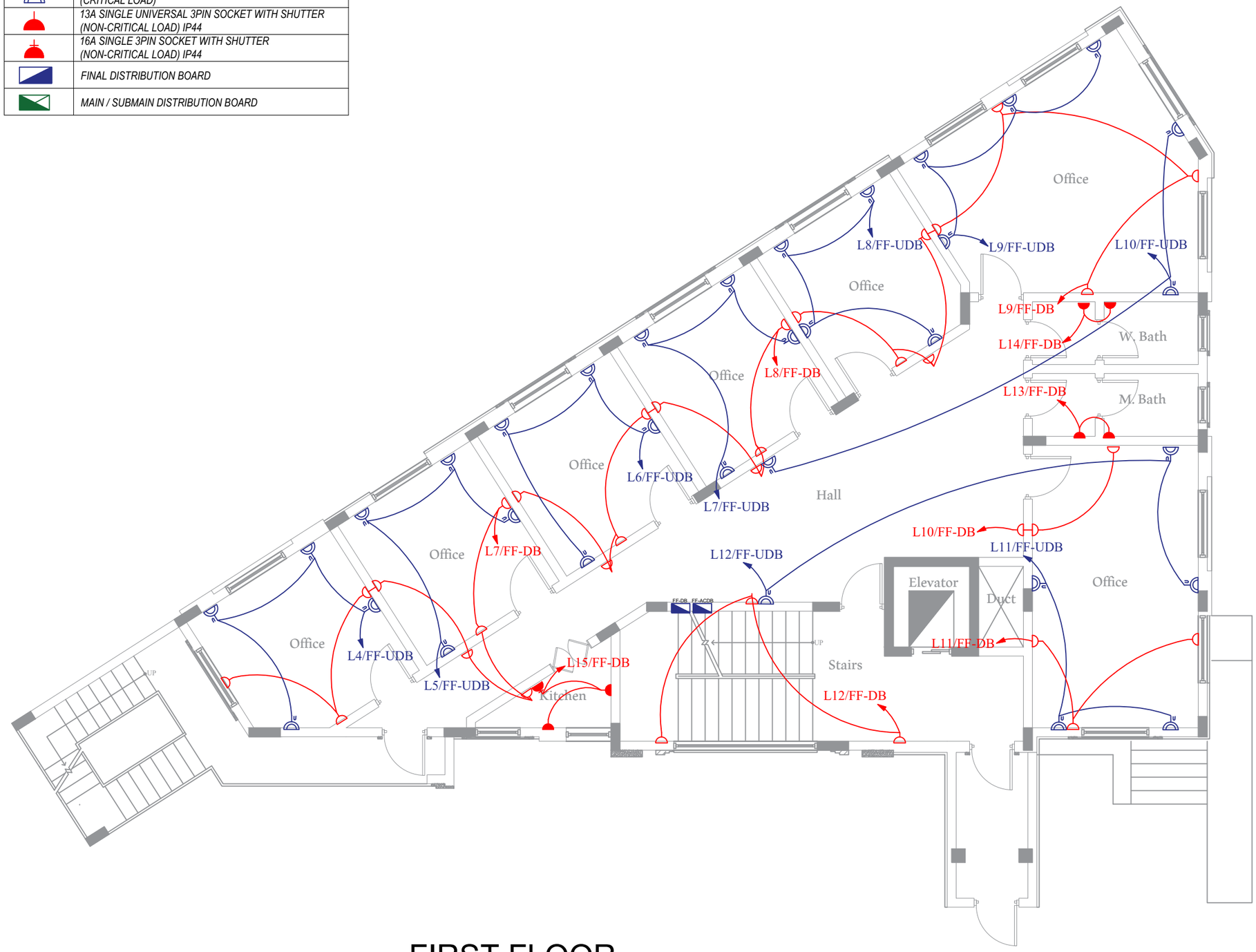

FIRST FLOOR

United Nations Development Programme (UNDP)	
Project: *NEW BUILDING REPLACING UNDSS OLD BUILDING*	
Location: *SANAA - Yemen*	
Drawing Title: *FIRST FLOOR POWER SYSTEM*	
Design By : *UNDP Engineering Unit*	
Drawing Type: *Electrical*	*Status :* *Tender*
Date: *13 APRIL 2021*	*Drawing No.* 8

LEGEND	DESCRIPTION
	13A SINGLE UNIVERSAL 3PIN SOCKET WITH SHUTTER (NON-CRITICAL LOAD)
	13A DOUBLE UNIVERSAL 3PIN SOCKET WITH SHUTTER (CRITICAL LOAD)
	13A SINGLE UNIVERSAL 3PIN SOCKET WITH SHUTTER (NON-CRITICAL LOAD) IP44
	16A SINGLE 3PIN SOCKET WITH SHUTTER (NON-CRITICAL LOAD) IP44
	FINAL DISTRIBUTION BOARD
	MAIN / SUBMAIN DISTRIBUTION BOARD

SECOND FLOOR

United Nations Development Programme (UNDP)

Project: NEW BUILDING REPLACING UNDSS OLD BUILDING

Location: SANAA - Yemen

Drawing Title: FIRST FLOOR POWER SYSTEM

Design By : UNDP Engineering Unit

Drawing Type: Electrical

Status : Tender

Date: 13 APRIL 2021

Drawing No. 9

FINAL BRANCH CIRCUIT PANELBOARD

BUILDING:	MAIN BUILDING	LOCATION:	BASEMENT FLOOR	PANEL REF:	BF-DB
VOLTAGE & FREQ:	400V/230V - 50HZ	FEED FROM:	MDB	PANEL TYPE:	18 WAY
MAIN INCOMMER	40A - RCBO	MOUNTING:	RECESED	ISC:	16 KA
MAIN CABLE FEEDER	4CX10SQ.MM XLPE/PVC +E=10				

DESIG. OF LOAD	WIRE SIZE mm²	PHASE LOAD IN VA R	Y	B						PHASE LOAD IN VA R	Y	B	WIRE SIZE mm²	DESIG. OF LOAD
C1 LIGHTING	3x2.5	360			1	6A	R Y B	16A	2	540			3x4	C13 SOCKET OUTLET
C2 LIGHTING	3x2.5		392		3	6A		16A	4		360		3x4	C14 SOCKET OUTLET
C3 LIGHTING	3x2.5			396	5	6A		16A	6			360	3x4	C15 SOCKET OUTLET
C4 SOCKET OUTLET	3x4	1440			7	16A		16A	8					RESERVE
C5 SOCKET OUTLET	3x4		1440		9	16A		16A	10					RESERVE
C6 SOCKET OUTLET	3x4			1440	11	16A		16A	12					RESERVE
C7 SOCKET OUTLET	3x4	540			13	16A		16A	14					RESERVE
C8 SOCKET OUTLET	3x4		540		15	16A		16A	16					RESERVE
C9 SOCKET OUTLET	3x4			540	17	16A		16A	18					RESERVE
		2340	2372	2376						540	360	360		
		R	Y	B			40A - RCBO							
TOTAL KVA (CONNECTED/PHASE		2880	2732	2736										

ALL OUTGOING C.Bs ARE MCB

TOTAL CONNECTED LOAD	8.348	KVA
DEMAND FACTOR	0.57	
DEMAND LOAD	4.748	KVA

	LTG.	MTR.	S.O.	MSC.	TOTAL
CONN VA	1,148		7,200.0		8348.0
DEM. FACTOR	1		0.5		0.57
DEMAND KVA	1.148		3.600		4.748

Demand Load: 4.748KVA

Circuit Breaker Capacity:

$$In = \frac{4748VA}{400V \times 1.73} \times 1.25 \times 1.3 \text{Future Extension}$$

CB: 40A–RCBO

Cable:

Cross Section Area(CCA)= 4x10sq.mm XLPE/PVC +E=10

United Nations Development Programme (UNDP)

Project: NEW BUILDING REPLACING UNDSS OLD BUILDING

Location: SANAA - Yemen

Drawing Title: LIGHTING AND POWER SYSTEMS **BF-DB** (NON CRITICAL LOAD)

Design By : UNDP Engineering Unit

Drawing Type: Electrical

Status : Tender

Date: 13 APRIL 2021

Drawing No. 10

FINAL BRANCH CIRCUIT PANELBOARD

BUILDING:	MAIN BUILDING	LOCATION:	GROUND FLOOR	PANEL REF:	GF-DB
VOLTAGE & FREQ:	400V/230V - 50HZ	FEED FROM:	MDB	PANEL TYPE:	18 WAY
MAIN INCOMMER	40A - RCBO	MOUNTING:	RECESED	ISC:	16 KA
MAIN CABLE FEEDER	4CX10SQ.MM XLPE/PVC +E=10				

DESIG. OF LOAD	WIRE SIZE mm²	PHASE LOAD IN VA R	Y	B						PHASE LOAD IN VA R	Y	B	WIRE SIZE mm²	DESIG. OF LOAD
						R	Y	B						
C1 LIGHTING	3x2.5	360			1	6A			16A 2	540			3x4	C13 SOCKET OUTLET
C2 LIGHTING	3x2.5		392		3	6A			16A 4		360		3x4	C14 SOCKET OUTLET
C3 LIGHTING	3x2.5			396	5	6A			16A 6			360	3x4	C15 SOCKET OUTLET
C4 SOCKET OUTLET	3x4	1440			7	16A			16A 8					RESERVE
C5 SOCKET OUTLET	3x4		1440		9	16A			16A 10					RESERVE
C6 SOCKET OUTLET	3x4			1440	11	16A			16A 12					RESERVE
C7 SOCKET OUTLET	3x4	540			13	16A			16A 14					RESERVE
C8 SOCKET OUTLET	3x4		540		15	16A			16A 16					RESERVE
C9 SOCKET OUTLET	3x4			540	17	16A			16A 18					RESERVE
		2340	2372	2376						540	360	360		
		R	Y	B		40A - RCBO							ALL OUTGOING C.Bs ARE MCB	
TOTAL KVA (CONNECTED/PHASE		2880	2732	2736										

TOTAL CONNECTED LOAD	8.348 KVA		LTG.	MTR.	S.O.	MSC.	TOTAL
DEMAND FACTOR	0.57	CONN VA	1,148		7,200.0		8348.0
DEMAND LOAD	4.748 KVA	DEM. FACTOR	1		0.5		0.57
		DEMAND KVA	1.148		3.600		4.748

Demand Load: 4.748KVA

Circuit Breaker Capacity:

$$In = \frac{4748VA}{400V \times 1.73} \times 1.25 \times 1.3 \text{Future Extension}$$

CB: 40A–RCBO

Cable:

Cross Section Area(CCA)= 4x10sq.mm XLPE/PVC +E=10

United Nations Development Programme (UNDP)	
Project: NEW BUILDING REPLACING UNDSS OLD BUILDING	
Location: SANAA - Yemen	
Drawing Title: LIGHTING AND POWER SYSTEMS **GF-DB** (NON CRITICAL LOAD)	
Design By : UNDP Engineering Unit	
Drawing Type: Electrical	Status : Tender
Date: 13 APRIL 2021	Drawing No. 11

FINAL BRANCH CIRCUIT PANELBOARD

BUILDING:	MAIN BUILDING	LOCATION:	FIRST FLOOR	PANEL REF:	FF-DB
VOLTAGE & FREQ:	400V/230V - 50HZ	FEED FROM:	MDB	PANEL TYPE:	18 WAY
MAIN INCOMMER	40A - RCBO	MOUNTING:	RECESED	ISC:	16 KA
MAIN CABLE FEEDER	4CX10SQ.MM XLPE/PVC +E=10				

DESIG. OF LOAD	WIRE SIZE mm²	PHASE LOAD IN VA R	Y	B					PHASE LOAD IN VA R	Y	B	WIRE SIZE mm²	DESIG. OF LOAD
C1 LIGHTING	3x2.5	360			1	6A	16A	2	540			3x4	C13 SOCKET OUTLET
C2 LIGHTING	3x2.5		392		3	6A	16A	4		360		3x4	C14 SOCKET OUTLET
C3 LIGHTING	3x2.5			476	5	6A	16A	6			360	3x4	C15 SOCKET OUTLET
C4 SOCKET OUTLET	3x4	1440			7	16A	16A	8					RESERVE
C5 SOCKET OUTLET	3x4		1440		9	16A	16A	10					RESERVE
C6 SOCKET OUTLET	3x4			1440	11	16A	16A	12					RESERVE
C7 SOCKET OUTLET	3x4	540			13	16A	16A	14					RESERVE
C8 SOCKET OUTLET	3x4		540		15	16A	16A	16					RESERVE
C9 SOCKET OUTLET	3x4			540	17	16A	16A	18					RESERVE
		2340	2372	2456					540	360	360		
		R	Y	B									
TOTAL KVA (CONNECTED/PHASE		2880	2732	2816									

R Y B

40A - RCBO

ALL OUTGOING C.Bs ARE MCB

TOTAL CONNECTED LOAD	8.428	KVA
DEMAND FACTOR	0.57	
DEMAND LOAD	4.828	KVA

	LTG.	MTR.	S.O.	MSC.	TOTAL
CONN VA	1,228		7,200.0		8428.0
DEM. FACTOR	1		0.5		0.57
DEMAND KVA	1.228		3.600		4.828

Demand Load: 4.828KVA

Circuit Breaker Capacity:

$$In = \frac{4828VA}{400Vx1.73} \quad x1.25x1.3 \text{Future Extension}$$

CB: 40A–RCBO

Cable:

Cross Section Area(CCA)= 4x10sq.mm XLPE/PVC +E=10

United Nations Development Programme (UNDP)

Project: NEW BUILDING REPLACING UNDSS OLD BUILDING

Location: SANAA - Yemen

Drawing Title: LIGHTING AND POWER SYSTEMS **FF-DB** (NON CRITICAL LOAD)

Design By : UNDP Engineering Unit

Drawing Type: Electrical

Status : Tender

Date: 13 APRIL 2021

Drawing No. 12

FINAL BRANCH CIRCUIT PANELBOARD

BUILDING:	MAIN BUILDING	LOCATION:	SECOND FLOOR	PANEL REF:	SF-DB
VOLTAGE & FREQ:	400V/230V - 50HZ	FEED FROM:	MDB	PANEL TYPE:	18 WAY
MAIN INCOMMER	40A - RCBO	MOUNTING:	RECESED	ISC:	16 KA
MAIN CABLE FEEDER	4CX10SQ.MM XLPE/PVC +E=10				

DESIG. OF LOAD	WIRE SIZE mm²	PHASE LOAD IN VA R	Y	B						PHASE LOAD IN VA R	Y	B	WIRE SIZE mm²	DESIG. OF LOAD
C1 LIGHTING	3x2.5	360			1	6A	R Y B	16A	2	540			3x4	C13 SOCKET OUTLET
C2 LIGHTING	3x2.5		392		3	6A		16A	4		360		3x4	C14 SOCKET OUTLET
C3 LIGHTING	3x2.5			476	5	6A		16A	6			360	3x4	C15 SOCKET OUTLET
C4 SOCKET OUTLET	3x4	1440			7	16A		16A	8					RESERVE
C5 SOCKET OUTLET	3x4		1440		9	16A		16A	10					RESERVE
C6 SOCKET OUTLET	3x4			1440	11	16A		16A	12					RESERVE
C7 SOCKET OUTLET	3x4	540			13	16A		16A	14					RESERVE
C8 SOCKET OUTLET	3x4		540		15	16A		16A	16					RESERVE
C9 SOCKET OUTLET	3x4			540	17	16A		16A	18					RESERVE
		2340	2372	2456						540	360	360		
		R	Y	B			40A - RCBO							ALL OUTGOING C.Bs ARE MCB
TOTAL KVA (CONNECTED/PHASE		2880	2732	2816										

TOTAL CONNECTED LOAD	8.428 KVA		LTG.	MTR.	S.O.	MSC.	TOTAL
DEMAND FACTOR	0.57	CONN VA	1,228		7,200.0		8428.0
DEMAND LOAD	4.828 KVA	DEM. FACTOR	1		0.5		0.57
		DEMAND KVA	1.228		3.600		4.828

Demand Load: 4.828KVA

Circuit Breaker Capacity:

$$In = \frac{4828VA}{400V \times 1.73} \times 1.25 \times 1.3 \text{Future Extension}$$

CB: 40A–RCBO

Cable:

Cross Section Area(CCA)= 4x10sq.mm XLPE/PVC +E=10

United Nations Development Programme (UNDP)

Project: NEW BUILDING REPLACING UNDSS OLD BUILDING

Location: SANAA - Yemen

Drawing Title: LIGHTING AND POWER SYSTEMS **SF-DB** (NON CRITICAL LOAD)

Design By : UNDP Engineering Unit

Drawing Type: Electrical

Status : Tender

Date: 13 APRIL 2021

Drawing No. 13

FINAL BRANCH CIRCUIT PANELBOARD

BUILDING:	MAIN BUILDING	LOCATION:	BASEMENT FLOOR	PANEL REF:	BF-ACDB
VOLTAGE & FREQ:	400V/230V - 50HZ	FEED FROM:	MCC	PANEL TYPE:	12 WAY
MAIN INCOMMER	63A - MCCB	MOUNTING:	RECESED	ISC:	16 KA
MAIN CABLE FEEDER	4CX16SQ.MM XLPE/PVC +E=16				

DESIG. OF LOAD	WIRE SIZE mm²	PHASE LOAD IN VA R	Y	B					PHASE LOAD IN VA R	Y	B	WIRE SIZE mm²	DESIG. OF LOAD
C1 AIR CONDITION	3x2.5	2400			1	20A	20A	2	2400			3x4	C13 AIR CONDITION
C2 AIR CONDITION	3x2.5		2400		3	20A	20A	4		2400		3x4	C14 AIR CONDITION
C3 AIR CONDITION	3x2.5			2400	5	20A	20A	6					RESERVE
C4 AIR CONDITION	3x4	2400			7	20A	20A	8					RESERVE
C5 AIR CONDITION	3x4		2400		9	20A	20A	10					RESERVE
C6 AIR CONDITION	3x4			2400	11	20A	20A	12					RESERVE
		4800	4800	4800					2400	2400			
		R	Y	B			63A - MCCB						ALL OUTGOING C.Bs ARE MCB
TOTAL KVA (CONNECTED/PHASE		7200	7200	4800									

TOTAL CONNECTED LOAD	19.200 KVA
DEMAND FACTOR	1.00
DEMAND LOAD	19.200 KVA

	LTG.	MTR.	S.O.	MSC.	TOTAL
CONN VA				19,200	19200.0
DEM. FACTOR				1	1.00
DEMAND KVA				19.200	19.200

Demand Load: 19.2KVA

Circuit Breaker Capacity:

$$In = \frac{19200VA}{400V \times 1.73} \times 1.25 \times 1.3 \text{Future Extension}$$

CB: 63A-MCCB

Cable:

Cross Section Area(CCA)= 4x16sq.mm XLPE/PVC +E=16

United Nations Development Programme (UNDP)

Project: NEW BUILDING REPLACING UNDSS OLD BUILDING

Location: SANAA - Yemen

Drawing Title: HVAC SYSTEM **BF-ACDB**

Design By : UNDP Engineering Unit

Drawing Type: Electrical

Status : Tender

Date: 13 APRIL 2021

Drawing No. 14

FINAL BRANCH CIRCUIT PANELBOARD

BUILDING:	MAIN BUILDING	LOCATION:	GROUND FLOOR	PANEL REF:	GF-ACDB
VOLTAGE & FREQ:	400V/230V - 50HZ	FEED FROM:	MCC	PANEL TYPE:	12 WAY
MAIN INCOMMER	63A - MCCB	MOUNTING:	RECESED	ISC:	16 KA
MAIN CABLE FEEDER	4CX16SQ.MM XLPE/PVC +E=16				

DESIG. OF LOAD	WIRE SIZE mm²	PHASE LOAD IN VA R	Y	B					PHASE LOAD IN VA R	Y	B	WIRE SIZE mm²	DESIG. OF LOAD
C1 AIR CONDITION	3x2.5	2400			1	20A	20A	2	2400			3x4	C13 AIR CONDITION
C2 AIR CONDITION	3x2.5		2400		3	20A	20A	4					RESERVE
C3 AIR CONDITION	3x2.5			2400	5	20A	20A	6			2400	3x4	C15 AIR CONDITION
C4 AIR CONDITION	3x4	2400			7	20A	20A	8					RESERVE
C5 AIR CONDITION	3x4		2400		9	20A	20A	10					RESERVE
C6 AIR CONDITION	3x4			2400	11	20A	20A	12					RESERVE
		4800	4800	4800					2400		2400		
		R	Y	B			63A - MCCB						ALL OUTGOING C.Bs ARE MCB
TOTAL KVA (CONNECTED/PHASE		7200	4800	7200									

TOTAL CONNECTED LOAD	19.200 KVA
DEMAND FACTOR	1.00
DEMAND LOAD	19.200 KVA

	LTG.	MTR.	S.O.	MSC.	TOTAL
CONN VA				19,200	19200.0
DEM. FACTOR				1	1.00
DEMAND KVA				19.200	19.200

Demand Load: 19.2KVA

Circuit Breaker Capacity:

$$\frac{19200VA}{400Vx1.73} \quad x1.25x1.3 \text{Future Extension}$$

CB: 63A-MCCB

Cross Section Area(CCA)= 4x16sq.mm XLPE/PVC +E=16

United Nations Development Programme (UNDP)

Project: NEW BUILDING REPLACING UNDSS OLD BUILDING

Location: SANAA - Yemen

Drawing Title: HVAC SYSTEM **GF-ACDB**

Design By : UNDP Engineering Unit

Drawing Type: Electrical

Status : Tender

Date: 13 APRIL 2021

Drawing No. 15

FINAL BRANCH CIRCUIT PANELBOARD

BUILDING:	MAIN BUILDING	LOCATION:	FIRST FLOOR	PANEL REF:	FF-ACDB
VOLTAGE & FREQ:	400V/230V - 50HZ	FEED FROM:	MCC	PANEL TYPE:	12 WAY
MAIN INCOMMER	63A - MCCB	MOUNTING:	RECESED	ISC:	16 KA
MAIN CABLE FEEDER	4CX16SQ.MM XLPE/PVC +E=16				

DESIG. OF LOAD	WIRE SIZE mm²	PHASE LOAD IN VA R	Y	B					PHASE LOAD IN VA R	Y	B	WIRE SIZE mm²	DESIG. OF LOAD
C1 AIR CONDITION	3x2.5	2400			1	20A	20A	2	2400			3x4	C13 AIR CONDITION
C2 AIR CONDITION	3x2.5		2400		3	20A	20A	4		2400		3x4	C14 AIR CONDITION
C3 AIR CONDITION	3x2.5			2400	5	20A	20A	6			2400	3x4	C15 AIR CONDITION
C4 AIR CONDITION	3x4	2400			7	20A	20A	8					RESERVE
C5 AIR CONDITION	3x4		2400		9	20A	20A	10					RESERVE
C6 AIR CONDITION	3x4			2400	11	20A	20A	12					RESERVE
		4800	4800	4800					2400	2400	2400		
		R	Y	B			63A - MCCB						
TOTAL KVA (CONNECTED/PHASE		7200	7200	7200									

R Y B

ALL OUTGOING C.Bs ARE MCB

TOTAL CONNECTED LOAD	21.600	KVA
DEMAND FACTOR	1.00	
DEMAND LOAD	21.600	KVA

	LTG.	MTR.	S.O.	MSC.	TOTAL
CONN VA				21,600	21600.0
DEM. FACTOR				1	1.00
DEMAND KVA				21.600	21.600

Demand Load: 21.6KVA

Circuit Breaker Capacity:

$$In = \frac{21600VA}{400V \times 1.73} \times 1.25 \times 1.3 \text{Future Extension}$$

CB: 63A–MCCB

Cable:

Cross Section Area(CCA)= 4x16sq.mm XLPE/PVC +E=16

United Nations Development Programme (UNDP)

Project: NEW BUILDING REPLACING UNDSS OLD BUILDING

Location: SANAA - Yemen

Drawing Title: HVAC SYSTEM **FF-ACDB**

Design By : UNDP Engineering Unit

Drawing Type: Electrical

Status : Tender

Date: 13 APRIL 2021

Drawing No. 16

FINAL BRANCH CIRCUIT PANELBOARD

BUILDING:	MAIN BUILDING	LOCATION:	SECOND FLOOR	PANEL REF:	SF-ACDB
VOLTAGE & FREQ:	400V/230V - 50HZ	FEED FROM:	MCC	PANEL TYPE:	12 WAY
MAIN INCOMMER	63A - MCCB	MOUNTING:	RECESED	ISC:	16 KA
MAIN CABLE FEEDER	4CX16SQ.MM XLPE/PVC +E=16				

DESIG. OF LOAD	WIRE SIZE mm²	PHASE LOAD IN VA R	Y	B					PHASE LOAD IN VA R	Y	B	WIRE SIZE mm²	DESIG. OF LOAD
						R Y B							
C1 AIR CONDITION	3x2.5	2400			1	20A	20A	2	2400			3x4	C13 AIR CONDITION
C2 AIR CONDITION	3x2.5		2400		3	20A	20A	4		2400		3x4	C14 AIR CONDITION
C3 AIR CONDITION	3x2.5			2400	5	20A	20A	6			2400	3x4	C15 AIR CONDITION
C4 AIR CONDITION	3x4	2400			7	20A	20A	8					RESERVE
C5 AIR CONDITION	3x4		2400		9	20A	20A	10					RESERVE
C6 AIR CONDITION	3x4			2400	11	20A	20A	12					RESERVE
		4800	4800	4800					2400	2400	2400		
		R	Y	B		63A - MCCB							ALL OUTGOING C.Bs ARE MCB
TOTAL KVA (CONNECTED/PHASE		7200	7200	7200									

TOTAL CONNECTED LOAD	21.600 KVA		LTG.	MTR.	S.O.	MSC.	TOTAL
DEMAND FACTOR	1.00	CONN VA				21,600	21600.0
DEMAND LOAD	21.600 KVA	DEM. FACTOR				1	1.00
		DEMAND KVA				21.600	21.600

Demand Load: 21.6KVA

Circuit Breaker Capacity:

$$In = \frac{21600VA}{400V \times 1.73} \times 1.25 \times 1.3 \text{Future Extension}$$

CB: 63A-MCCB

Cable:

Cross Section Area(CCA)= 4x16sq.mm XLPE/PVC +E=16

United Nations Development Programme (UNDP)

Project: NEW BUILDING REPLACING UNDSS OLD BUILDING

Location: SANAA - Yemen

Drawing Title: HVAC SYSTEM **SF-ACDB**

Design By : UNDP Engineering Unit

Drawing Type: Electrical

Status : Tender

Date: 13 APRIL 2021

Drawing No. 17

FINAL BRANCH CIRCUIT PANELBOARD

BUILDING:	MAIN BUILDING	LOCATION:	BASEMENT FLOOR	PANEL REF:	BF-UDB
VOLTAGE & FREQ:	400V/230V - 50HZ	FEED FROM:	UMDB	PANEL TYPE:	18 WAY
MAIN INCOMMER	40A - RCBO	MOUNTING:	RECESED	ISC:	16 KA
MAIN CABLE FEEDER	4CX10SQ.MM XLPE/PVC +E=10				

DESIG. OF LOAD	WIRE SIZE mm²	PHASE LOAD IN VA R	Y	B					PHASE LOAD IN VA R	Y	B	WIRE SIZE mm²	DESIG. OF LOAD
C1 LIGHTING	3x2.5	288			1	6A	16A	2	540			3x4	C10 SOCKET OUTLET
C2 LIGHTING	3x2.5		240		3	6A	16A	4		720		3x4	C11 SOCKET OUTLET
C3 LIGHTING	3x2.5			320	5	6A	16A	6			540	3x4	C12 SOCKET OUTLET
C4 SOCKET OUTLET	3x4	1440			7	16A	16A	8	2000			3x4	C13 SOCKET OUTLET
C5 SOCKET OUTLET	3x4		1440		9	16A	16A	10		1250		3x4	C14 SOCKET OUTLET
C6 SOCKET OUTLET	3x4			1440	11	16A	16A	12			1500	3x4	C15 SOCKET OUTLET
C7 SOCKET OUTLET	3x4	1440			13	16A	16A	14					RESERVE
C8 SOCKET OUTLET	3x4		1440		15	16A	16A	16		60		3x2.5	C17 SOCKET OUTLET
C9 SOCKET OUTLET	3x4			1440	17	16A	16A	18			1250	3x4	C18 SOCKET OUTLET
		3168	3120	3200					2540	2030	3290		
		R	Y	B									
TOTAL KVA (CONNECTED/PHASE		5708	5150	6490									

R Y B

40A - RCBO

ALL OUTGOING C.Bs ARE MCB

TOTAL CONNECTED LOAD	17.348	KVA
DEMAND FACTOR	0.70	
DEMAND LOAD	12.128	KVA

	LTG.	MTR.	S.O.	MSC.	TOTAL
CONN VA	848		10,440.0	6,060	17348.0
DEM. FACTOR	1		0.5	1	0.70
DEMAND KVA	0.848		5.220	6.060	12.128

Demand Load: 6.068KVA

Circuit Breaker Capacity:

$$In = \frac{12128VA}{400Vx1.73} \quad x1.25x1.3 \text{Future Extension}$$

CB: 40A–RCBO

Cable:

Cross Section Area(CCA)= 4x10sq.mm XLPE/PVC +E=10

United Nations Development Programme (UNDP)

Project: NEW BUILDING REPLACING UNDSS OLD BUILDING

Location: SANAA - Yemen

Drawing Title: LIGHTING AND POWER SYSTEMS **BF-UDB** (CRITICAL LOAD)

Design By : UNDP Engineering Unit

Drawing Type: Electrical

Status : Tender

Date: 13 APRIL 2021

Drawing No. 18

FINAL BRANCH CIRCUIT PANELBOARD

BUILDING:	MAIN BUILDING	LOCATION:	GROUND FLOOR	PANEL REF:	GF-UDB
VOLTAGE & FREQ:	400V/230V - 50HZ	FEED FROM:	UMDB	PANEL TYPE:	18 WAY
MAIN INCOMMER	40A - RCBO	MOUNTING:	RECESED	ISC:	16 KA
MAIN CABLE FEEDER	4CX10SQ.MM XLPE/PVC +E=10				

DESIG. OF LOAD	WIRE SIZE mm²	PHASE LOAD IN VA R	Y	B						PHASE LOAD IN VA R	Y	B	WIRE SIZE mm²	DESIG. OF LOAD
C1 LIGHTING	3x2.5	300			1	6A	R Y B	16A	2	540			3x4	C13 SOCKET OUTLET
C2 LIGHTING	3x2.5		240		3	6A		16A	4		540		3x4	C14 LIGHTING
C3 LIGHTING	3x2.5			320	5	6A		16A	6			56	3x2.5	C15 SOCKET OUTLET
C4 SOCKET OUTLET	3x4	1440			7	16A		16A	8					RESERVE
C5 SOCKET OUTLET	3x4		1440		9	16A		16A	10					RESERVE
C6 SOCKET OUTLET	3x4			1440	11	16A		16A	12					RESERVE
C7 SOCKET OUTLET	3x4	1440			13	16A		16A	14					RESERVE
C8 SOCKET OUTLET	3x4		1440		15	16A		16A	16					RESERVE
C9 SOCKET OUTLET	3x4			1440	17	16A		16A	18					RESERVE
		3180	3120	3200						540	540	56		
		R	Y	B			40A - RCBO							
TOTAL KVA (CONNECTED/PHASE		3720	3660	3256										

ALL OUTGOING C.Bs ARE MCB

TOTAL CONNECTED LOAD	10.636	KVA
DEMAND FACTOR	0.54	
DEMAND LOAD	5.776	KVA

	LTG.	MTR.	S.O.	MSC.	TOTAL
CONN VA	916		9,720.0		10636.0
DEM. FACTOR	1		0.5		0.54
DEMAND KVA	0.916		4.860		5.776

Demand Load: 5.708KVA

Circuit Breaker Capacity:

$$In = \frac{5776VA}{400Vx1.73} \quad x1.25x1.3 \text{Future Extension}$$

CB: 40A–RCBO

Cable:

Cross Section Area(CCA)= 4x10sq.mm XLPE/PVC +E=10

United Nations Development Programme (UNDP)

Project: NEW BUILDING REPLACING UNDSS OLD BUILDING

Location: SANAA - Yemen

Drawing Title: LIGHTING AND POWER SYSTEMS GF-UDB (CRITICAL LOAD)

Design By : UNDP Engineering Unit

Drawing Type: Electrical

Status : Tender

Date: 13 APRIL 2021

Drawing No. 19

FINAL BRANCH CIRCUIT PANELBOARD

BUILDING:	MAIN BUILDING	LOCATION:	FIRST FLOOR	PANEL REF:	FF-UDB
VOLTAGE & FREQ:	400V/230V - 50HZ	FEED FROM:	UMDB	PANEL TYPE:	18 WAY
MAIN INCOMMER	40A - RCBO	MOUNTING:	RECESED	ISC:	16 KA
MAIN CABLE FEEDER	4CX10SQ.MM XLPE/PVC +E=10				

DESIG. OF LOAD	WIRE SIZE mm²	PHASE LOAD IN VA R	Y	B			R Y B			PHASE LOAD IN VA R	Y	B	WIRE SIZE mm²	DESIG. OF LOAD
C1 LIGHTING	3x2.5	344			1	6A		16A	2	540			3x4	C13 SOCKET OUTLET
C2 LIGHTING	3x2.5		288		3	6A		16A	4		540		3x4	C14 SOCKET OUTLET
C3 LIGHTING	3x2.5			320	5	6A		16A	6			540	3x4	C15 SOCKET OUTLET
C4 SOCKET OUTLET	3x4	1440			7	16A		16A	8	150			3x4	C16 LIGHTING
C5 SOCKET OUTLET	3x4		1440		9	16A		16A	10		150		3x4	C17 LIGHTING
C6 SOCKET OUTLET	3x4			1440	11	16A		16A	12			150	3x4	C18 LIGHTING
C7 SOCKET OUTLET	3x4	1440			13	16A		16A	14					RESERVE
C8 SOCKET OUTLET	3x4		1440		15	16A		16A	16					RESERVE
C9 SOCKET OUTLET	3x4			1440	17	16A		16A	18					RESERVE
		3224	3168	3200						690	690	690		
		R	Y	B			40A - RCBO							ALL OUTGOING C.Bs ARE MCB
TOTAL KVA (CONNECTED/PHASE		3914	3858	3890										

TOTAL CONNECTED LOAD	11.662 KVA		LTG.	MTR.	S.O.	MSC.	TOTAL
DEMAND FACTOR	0.56	CONN VA	1,402		10,260.0		11662.0
DEMAND LOAD	6.532 KVA	DEM. FACTOR	1		0.5		0.56
		DEMAND KVA	1.402		5.130		6.532

Demand Load: 6.058KVA

Circuit Breaker Capacity:

$$In = \frac{6532VA}{400V \times 1.73} \times 1.25 \times 1.3 \text{Future Extension}$$

CB: 40A–RCBO

Cable:

Cross Section Area(CCA)= 4x10sq.mm XLPE/PVC +E=10

United Nations Development Programme (UNDP)

Project: NEW BUILDING REPLACING UNDSS OLD BUILDING

Location: SANAA - Yemen

Drawing Title: LIGHTING AND POWER SYSTEMS **FF_UDB** (CRITICAL LOAD)

Design By : UNDP Engineering Unit

Drawing Type: Electrical

Status : Tender

Date: 13 APRIL 2021

Drawing No. 20

FINAL BRANCH CIRCUIT PANELBOARD

BUILDING:	MAIN BUILDING	LOCATION:	SECOND FLOOR	PANEL REF:	SF-UDB
VOLTAGE & FREQ:	400V/230V - 50HZ	FEED FROM:	UMDB	PANEL TYPE:	18 WAY
MAIN INCOMMER	40A - RCBO	MOUNTING:	RECESED	ISC:	16 KA
MAIN CABLE FEEDER	4CX10SQ.MM XLPE/PVC +E=10				

DESIG. OF LOAD	WIRE SIZE mm²	PHASE LOAD IN VA R	Y	B						PHASE LOAD IN VA R	Y	B	WIRE SIZE mm²	DESIG. OF LOAD
C1 LIGHTING	3x2.5	344			1	6A	R Y B	16A	2	540			3x4	C13 SOCKET OUTLET
C2 LIGHTING	3x2.5		288		3	6A		16A	4		540		3x4	C14 SOCKET OUTLET
C3 LIGHTING	3x2.5			320	5	6A		16A	6			540	3x4	C15 SOCKET OUTLET
C4 SOCKET OUTLET	3x4	1440			7	16A		16A	8					RESERVE
C5 SOCKET OUTLET	3x4		1440		9	16A		16A	10		36		3x2.5	C17 LIGHTING
C6 SOCKET OUTLET	3x4			1440	11	16A		16A	12					RESERVE
C7 SOCKET OUTLET	3x4	1440			13	16A		16A	14					RESERVE
C8 SOCKET OUTLET	3x4		1440		15	16A		16A	16					RESERVE
C9 SOCKET OUTLET	3x4			1440	17	16A		16A	18					RESERVE
		3224	3168	3200						540	576	540		
		R	Y	B			40A - RCBO							ALL OUTGOING C.Bs ARE MCB
TOTAL KVA (CONNECTED/PHASE		3764	3744	3740										

TOTAL CONNECTED LOAD	11.248 KVA		LTG.	MTR.	S.O.	MSC.	TOTAL
DEMAND FACTOR	0.54	CONN VA	988		10,260.0		11248.0
DEMAND LOAD	6.118 KVA	DEM. FACTOR	1		0.5		0.54
		DEMAND KVA	0.988		5.130		6.118

Demand Load: 6.058KVA

Circuit Breaker Capacity:

$$In = \frac{6118VA}{400V \times 1.73} \times 1.25 \times 1.3 \text{Future Extension}$$

CB: 40A-RCBO

Cable:

Cross Section Area(CCA)= 4x10sq.mm XLPE/PVC +E=10

United Nations Development Programme (UNDP)

Project: NEW BUILDING REPLACING UNDSS OLD BUILDING

Location: SANAA - Yemen

Drawing Title: LIGHTING AND POWER SYSTEMS UDBS (CRITICAL LOAD)

Design By : UNDP Engineering Unit

Drawing Type: Electrical

Status : Tender

Date: 13 APRIL 2021

Drawing No. 21

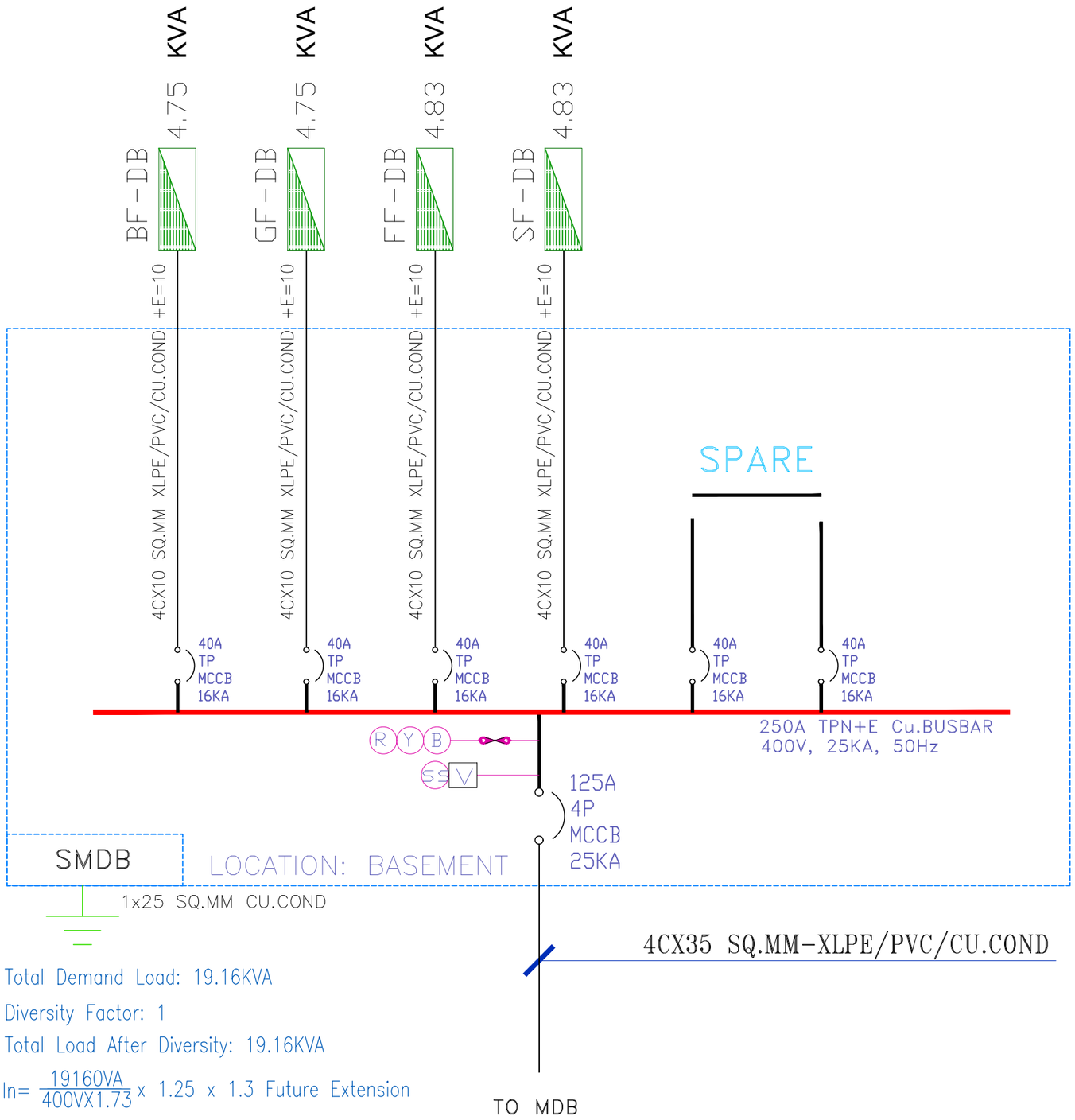

Total Demand Load: 19.16KVA

Diversity Factor: 1

Total Load After Diversity: 19.16KVA

$In = \frac{19160VA}{400VX1.73} \times 1.25 \times 1.3$ Future Extension

CB : 125A-4P-MCCB

United Nations Development Programme (UNDP)	
Project: NEW BUILDING REPLACING UNDSS OLD BUILDING	
Location: SANAA - Yemen	
Drawing Title: SMDB SINGLE LINE DIAGRAM	
Design By : UNDP Engineering Unit	
Drawing Type: Electrical	Status : Tender
Date: 13 APRIL 2021	Drawing No. 22

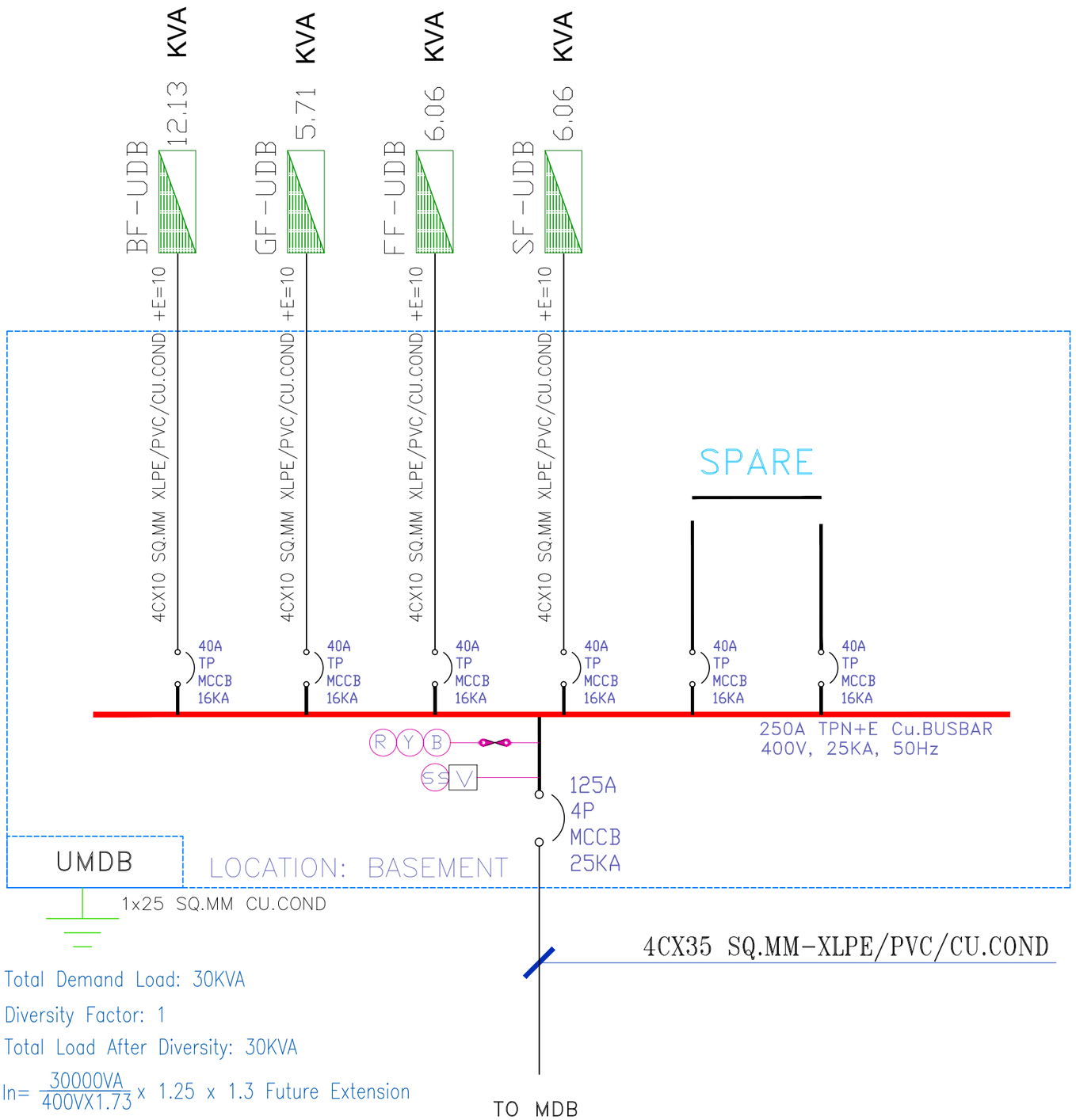

Total Demand Load: 30KVA

Diversity Factor: 1

Total Load After Diversity: 30KVA

$In = \frac{30000VA}{400VX1.73} \times 1.25 \times 1.3$ Future Extension

CB : 125A-4P-MCCB

United Nations Development Programme (UNDP)	
Project: NEW BUILDING REPLACING UNDSS OLD BUILDING	
Location: SANAA - Yemen	
Drawing Title: UMDB SINGLE LINE DIAGRAM	
Design By : UNDP Engineering Unit	
Drawing Type: Electrical	Status : Tender
Date: 13 APRIL 2021	Drawing No. 23

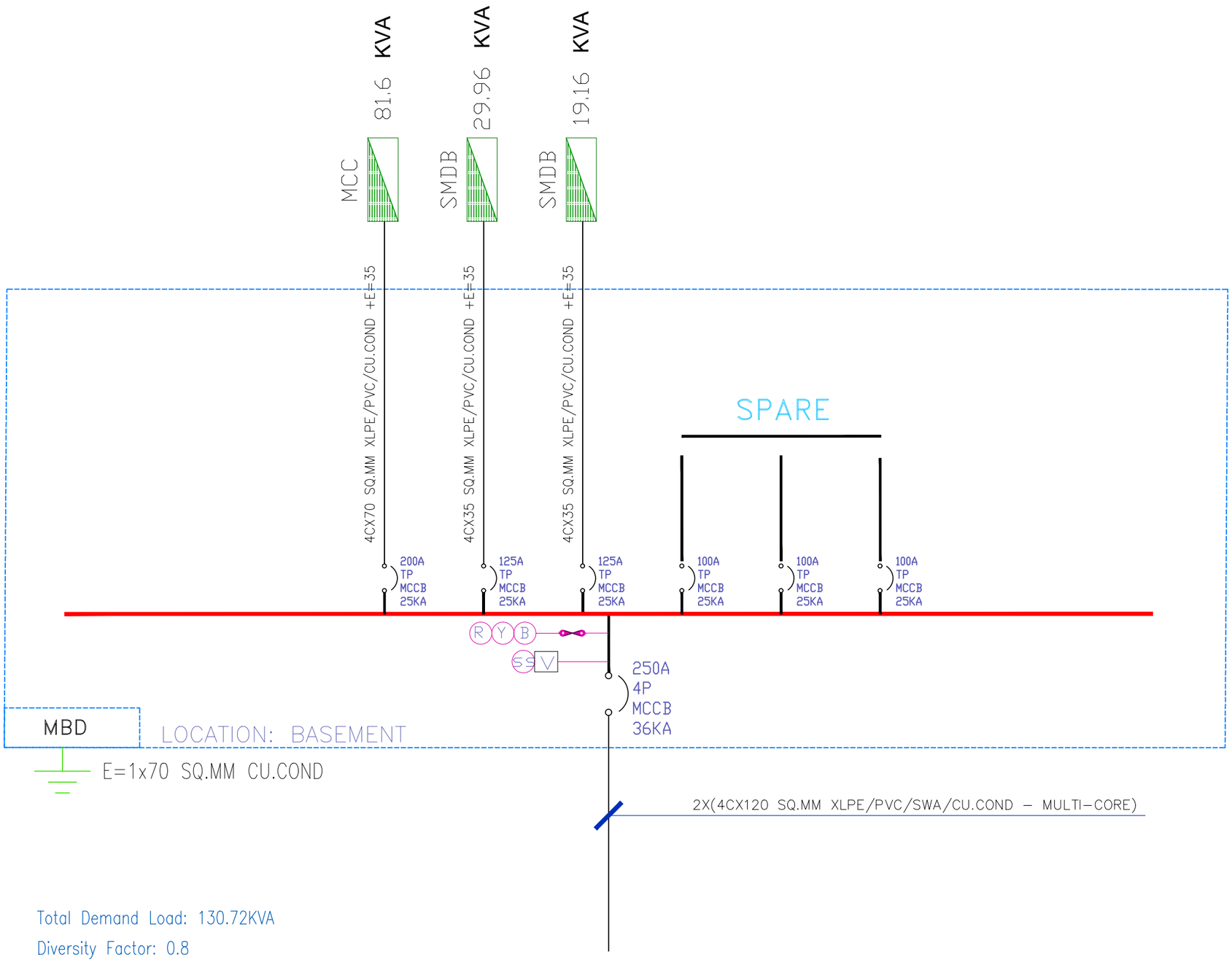

Total Demand Load: 130.72KVA

Diversity Factor: 0.8

Total Load After Diversity: 104.58KVA

$$In = \frac{104580VA}{400VX1.73} x\ 1.25\ x\ 1.3 \text{ Future Extension}$$

CB : 250A-4P-MCCB

United Nations Development Programme (UNDP)	
Project: NEW BUILDING REPLACING UNDSS OLD BUILDING	
Location: SANAA - Yemen	
Drawing Title: UMDB SINGLE LINE DIAGRAM	
Design By : UNDP Engineering Unit	
Drawing Type: Electrical	Status : Tender
Date: 13 APRIL 2021	Drawing No. 24

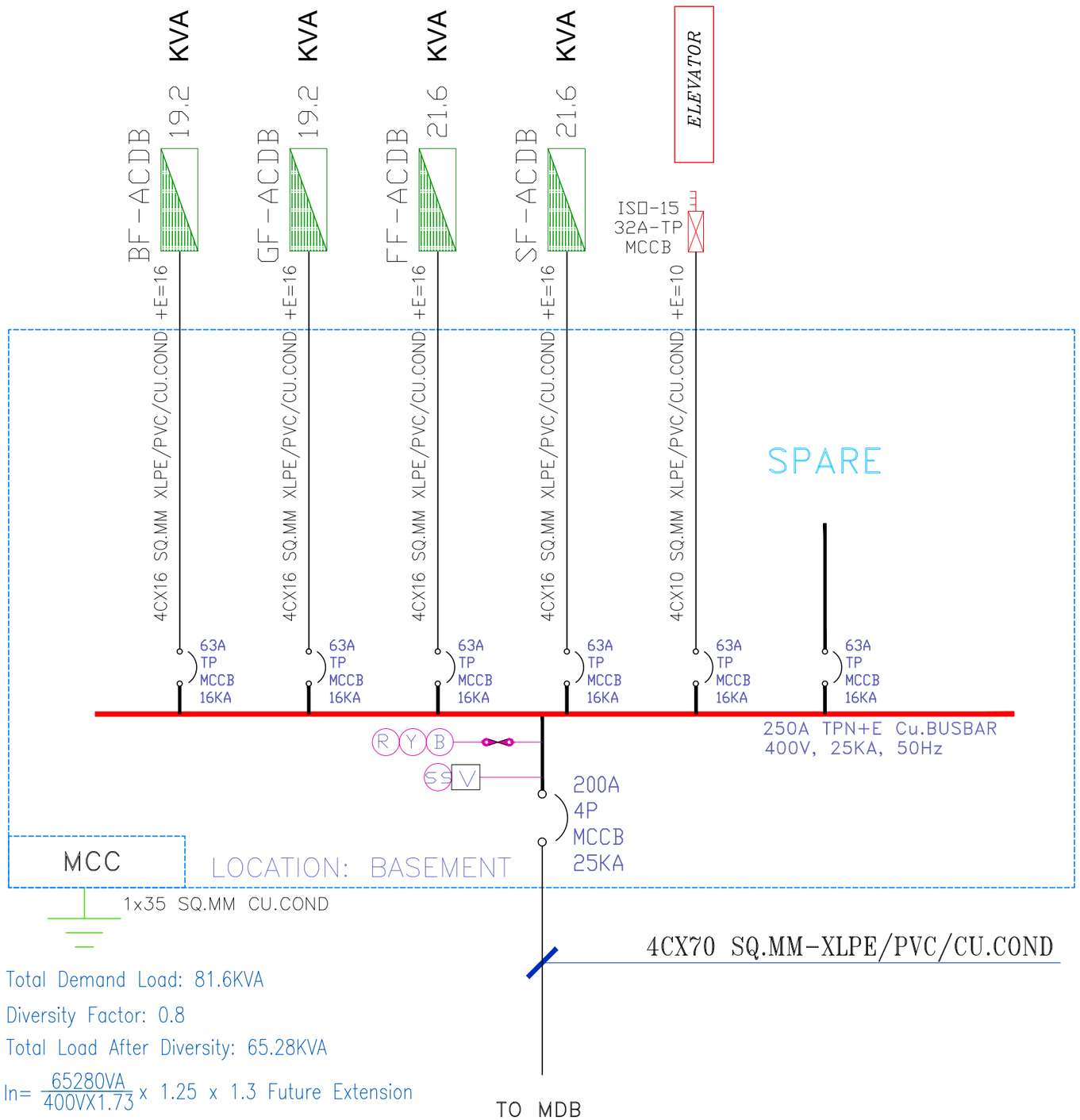

Total Demand Load: 81.6KVA

Diversity Factor: 0.8

Total Load After Diversity: 65.28KVA

$In = \frac{65280VA}{400VX1.73} \times 1.25 \times 1.3$ Future Extension

CB : 200A-4P-MCCB

United Nations Development Programme (UNDP)	
Project: NEW BUILDING REPLACING UNDSS OLD BUILDING	
Location: SANAA - Yemen	
Drawing Title: MCC SINGLE LINE DIAGRAM	
Design By : UNDP Engineering Unit	
Drawing Type: Electrical	Status : Tender
Date: 13 APRIL 2021	Drawing No. 25

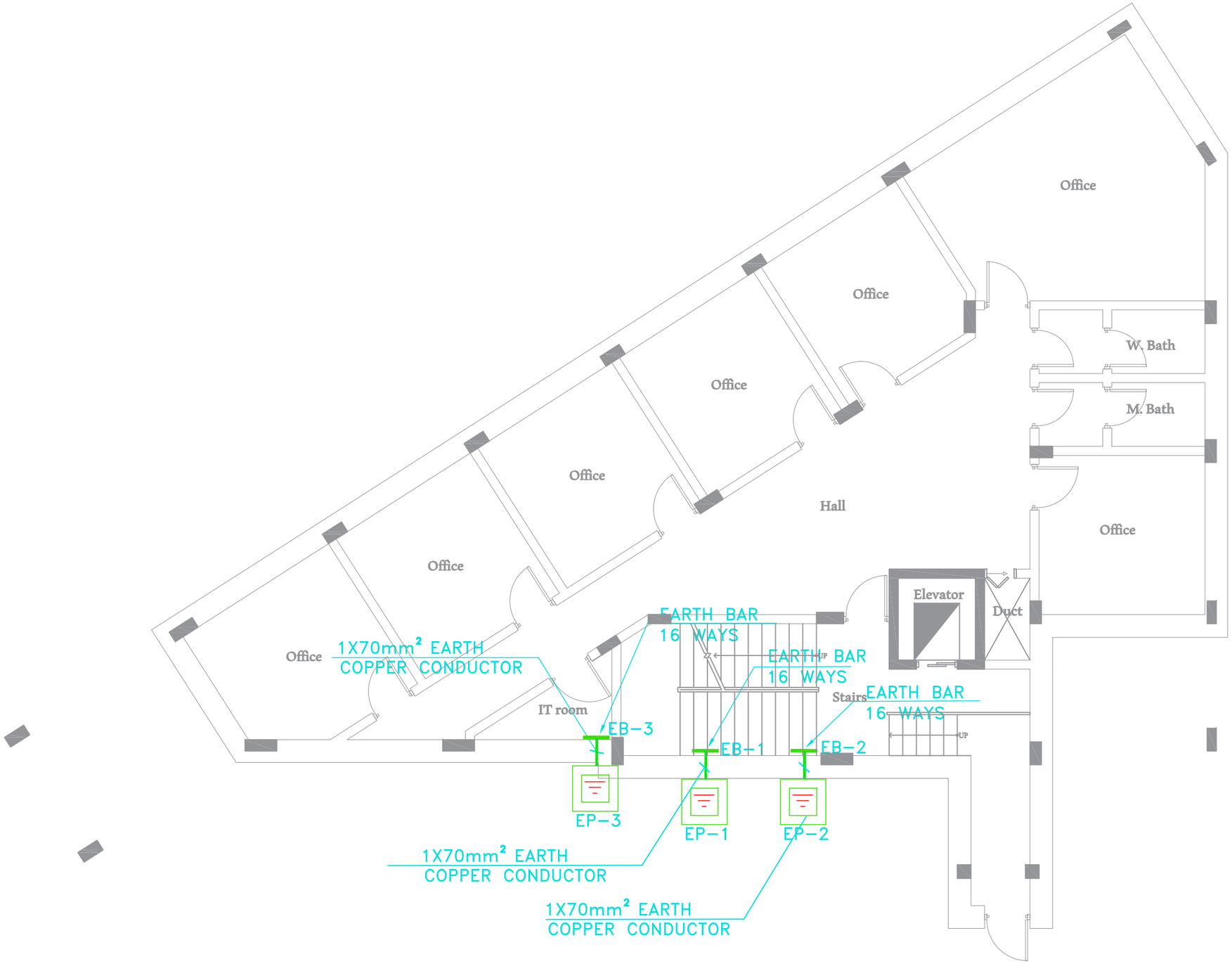

United Nations Development Programme (UNDP)

Project: NEW BUILDING REPLACING UNDSS OLD BUILDING

Location: SANAA - Yemen

Drawing Title: EARTHING SYSTEM

Design By : UNDP Engineering Unit

Drawing Type: Electrical

Status : Tender

Date: 13 APRIL 2021

Drawing No. 26

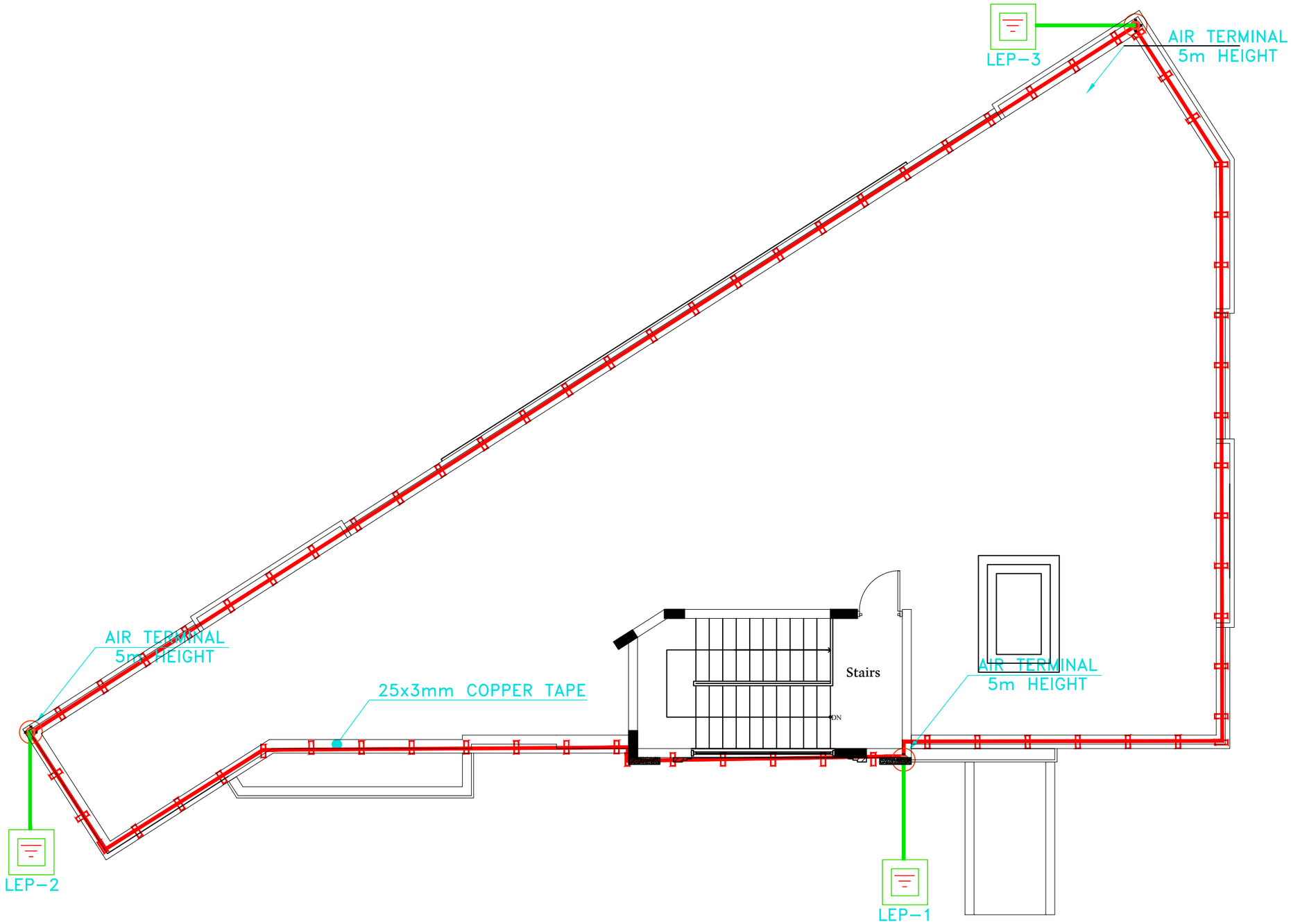

United Nations Development Programme (UNDP)

Project: NEW BUILDING REPLACING UNDSS OLD BUILDING

Location: SANAA - Yemen

Drawing Title: LIGHTNING SYSTEM

Design By : UNDP Engineering Unit

Drawing Type: Electrical

Status : Tender

Date: 13 APRIL 2021

Drawing No. 27

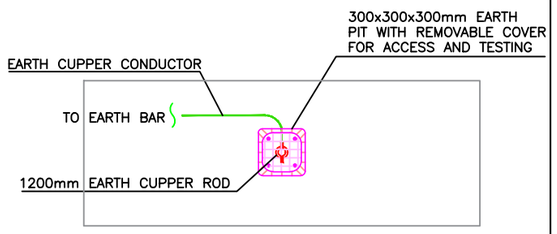

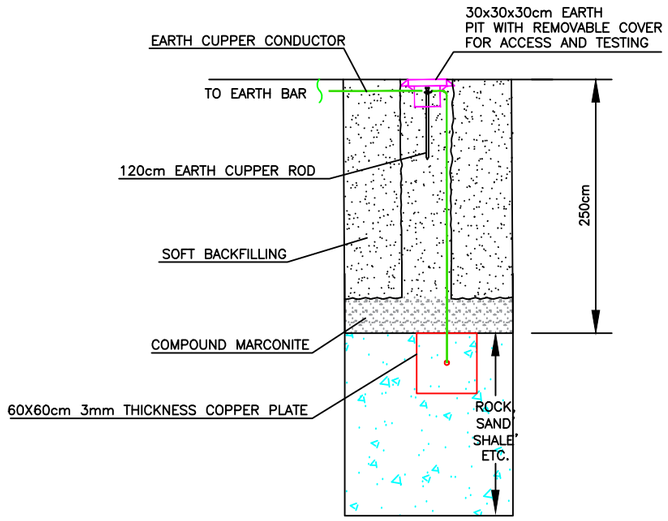

1 TYPICAL DETAILS FOR EARTHING PIT

SCALE NTS

NOTE (FOR POWER & LOW CURRENT NETWORKS):

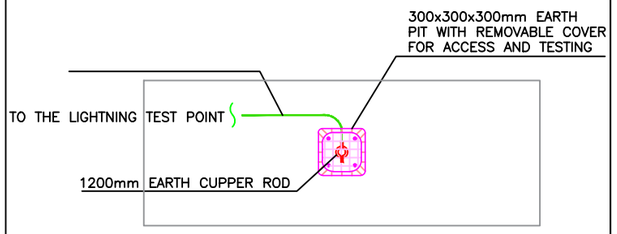

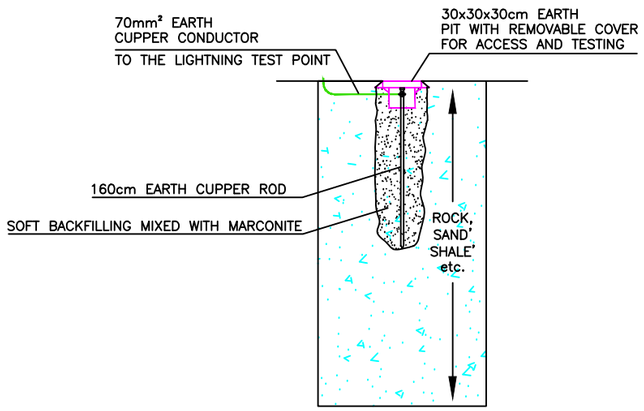

1 TYPICAL DETAILS FOR EARTHING PIT

SCALE NTS

NOTE (FOR LIGHTNING PROTECTION SYSTEM):

United Nations Development Programme (UNDP)

Project: NEW BUILDING REPLACING UNDSS OLD BUILDING

Location: SANAA - Yemen

Drawing Title: EARTHING SYSTEM DETAILS

Design By : UNDP Engineering Unit

Drawing Type: Electrical

Status : Tender

Date: 13 APRIL 2021

Drawing No. 28

MECHNICAL DRAWINGS

1	*BASEMENT FLOOR HVAC SYSTEM*
2	*GROUND FLOOR HVAC SYSTEM*
3	*FIRST FLOOR HVAC SYSTEM*
4	*SECOND FLOOR HVAC SYSTEM*

United Nations Development Programme (UNDP)

Project: *NEW BUILDING REPLACING UNDSS OLD BUILDING*

Location: *SANAA - Yemen*

Drawing Title: *DRAWING LIST*

Design By : *UNDP Engineering Unit*

Drawing Type: *MECHANICAL*

Status : *FINAL*

Date: *13 APRIL 2021*

Drawing No. 0

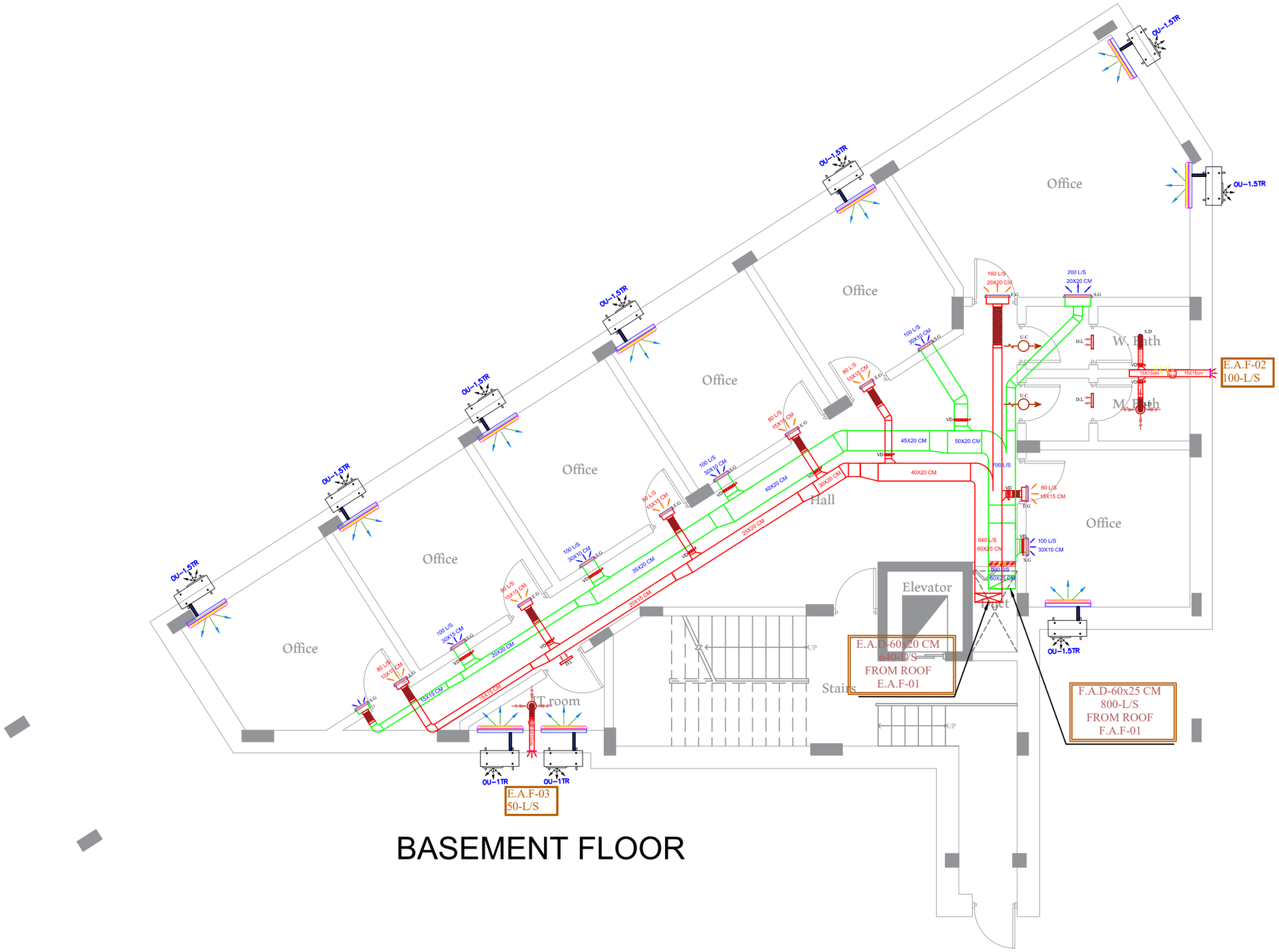

BASEMENT FLOOR

United Nations Development Programme (UNDP)

Project: NEW BUILDING REPLACING UNDSS OLD BUILDING

Location: SANAA - Yemen

Drawing Title: BASEMENT FLOOR HVAC SYSTEM

Design By : UNDP Engineering Unit

Drawing Type: MECHANICAL

Status : FINAL

Date: 13 APRIL 2021

Drawing No. 1

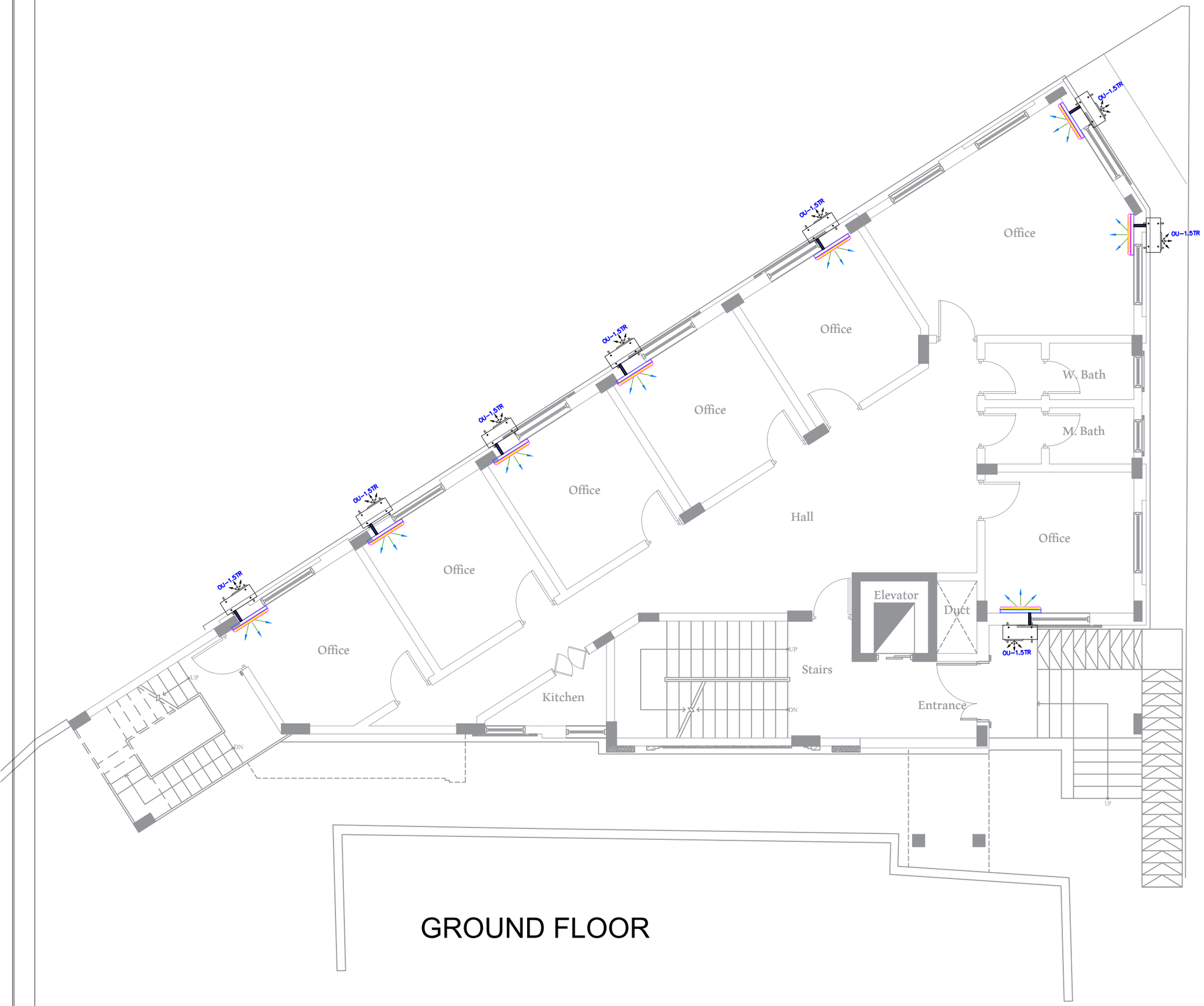

United Nations Development Programme (UNDP)

Project: NEW BUILDING REPLACING UNDSS OLD BUILDING

Location: SANAA - Yemen

Drawing Title: GROUND FLOOR HVAC SYSTEM

Design By : UNDP Engineering Unit

Drawing Type: MECHANICAL

Status : FINAL

Date: 13 APRIL 2021

Drawing No. 2

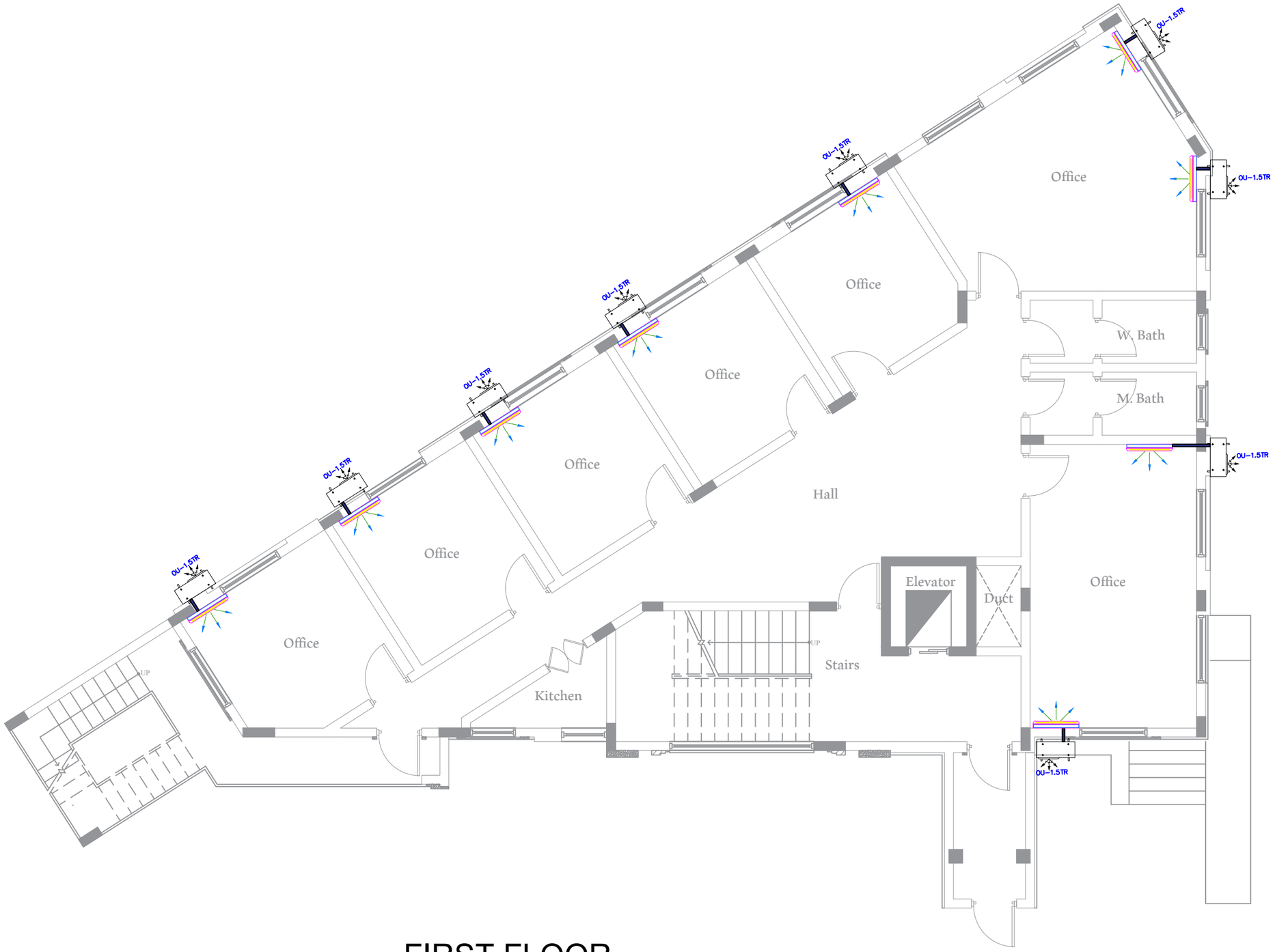

FIRST FLOOR

United Nations Development Programme (UNDP)

Project: NEW BUILDING REPLACING UNDSS OLD BUILDING

Location: SANAA - Yemen

Drawing Title: FIRST FLOOR HVAC SYSTEM

Design By : UNDP Engineering Unit

Drawing Type: MECHANICAL

Status : FINAL

Date: 13 APRIL 2021

Drawing No. 3

SECOND FLOOR

United Nations Development Programme (UNDP)

Project: NEW BUILDING REPLACING UNDSS OLD BUILDING

Location: SANAA - Yemen

Drawing Title: SECOND FLOOR HVAC SYSTEM

Design By : UNDP Engineering Unit

Drawing Type: MECHANICAL

Status : FINAL

Date: 13 APRIL 2021

Drawing No. 4

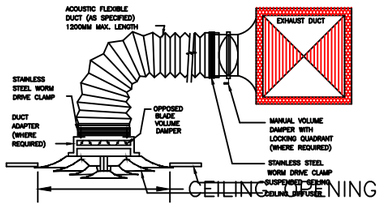

CEILING DIFFUSER

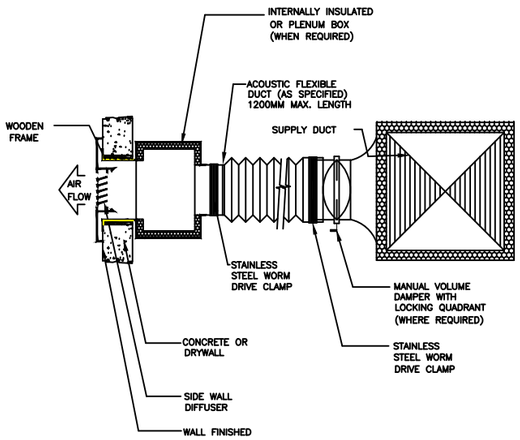

NOTE:

1. UNLESS OTHERWISE SPECIFIED THE SIZE OF DIFFUSER ADAPTER SHALL BE AS PER MANUFACTURERS RECOMMENDATIONS.

WALL GRILLE

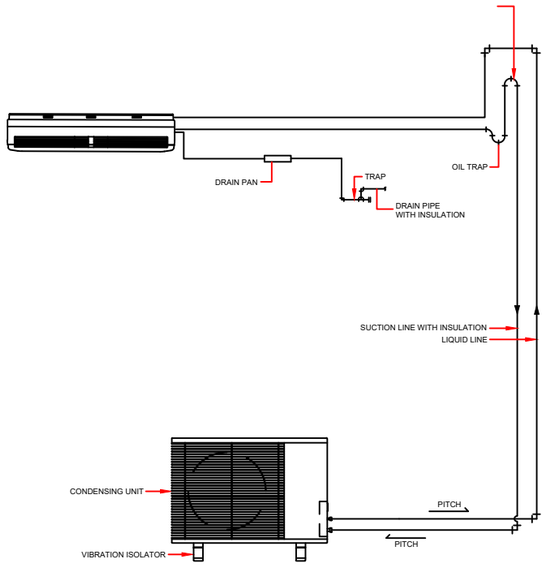

NOTES:

1. ALLOW SUFFICIENT SPACE FOR WIRING,REFRIGERANT PIPING AND SERVICING UNIT

SPLIT TYPE AIR CONDITIONER INSTALLATION

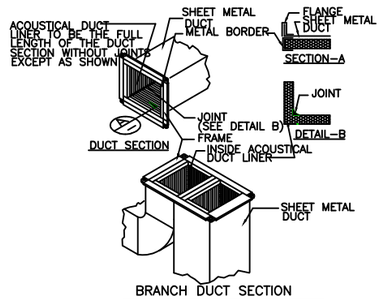

BRANCH DUCT SECTION

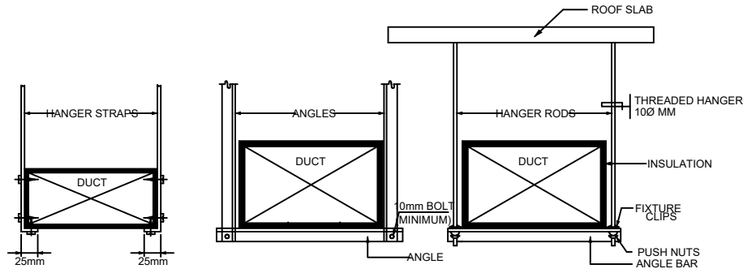

RECOMMENDED HANGER SIZES FOR RECTANGULAR DUCT

LONGEST DIMENSION	STRAP HANGERS (ALT.-1)	ANGLE HANGERS/TRAPEZE (ALT.-2)	HANGER ROD/TRAPEZE (ALT.-3)	MAXIMUM SPACING
UP THRU 450mm.	25mm X 16 Ga.	25mm X 25mm X 3mm	6mm Ø	3.00 M.
460 THRU 670mm.	25mm X 16 Ga.	25mm X 25mm X 3mm	6mm Ø	3.00 M.
680 THRU 1070mm.	25mm X 16 Ga.	40mm X 40mm X 3mm	6mm Ø	3.00 M.
1080 THRU 1520mm.	25mm X 16 Ga.	40mm X 40mm X 3mm	8mm Ø	3.00 M.
1530 THRU 2130mm.	40mm X 16 Ga.	50mm X 50mm X 3mm	8mm Ø	2.40 M.

RECTANGULAR DUCT HANGER DETAIL & SCHEDULE

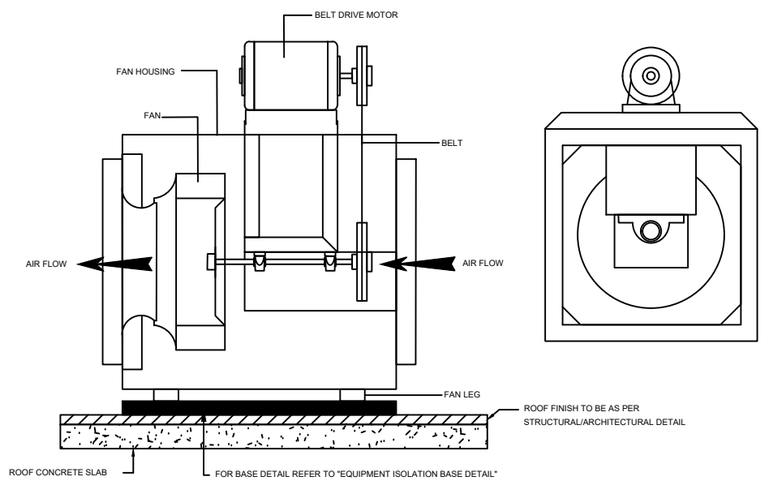

END VIEW

CENTRIFUGAL IN-LINE FAN
ROOF MOUNTED INSTALLATION

United Nations Development Programme (UNDP)

Project: NEW BUILDING REPLACING UNDSS OLD BUILDING

Location: SANAA - Yemen

Drawing Title: VENTILATION SYSTEM DETAILS(1)

Design By : UNDP Engineering Unit

Drawing Type: MECHANICAL

Status : FINAL

Date: 13 APRIL 2021

Drawing No. 5

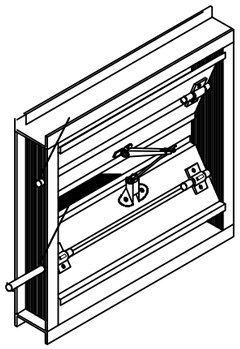

ISOMETRIC VIEW

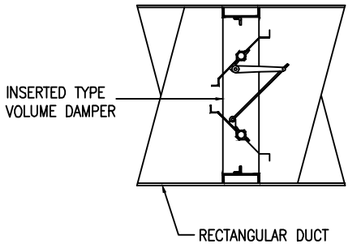

INSERT TYPE VOLUME DAMPEP

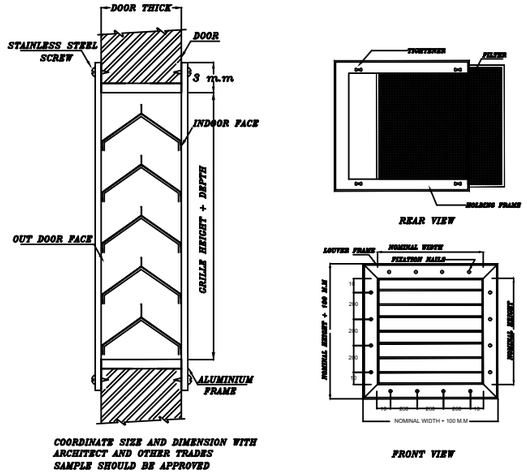

COORDINATE SIZE AND DIMENSION WITH ARCHITECT AND OTHER TRADES SAMPLE SHOULD BE APPROVED

DOOR GRILLE

FANS SCHEDULE

FAN NO.	AREA SERVED	LOCATION	TYPE	QTY	CAPACITY (LPS)	ESP	MOTOR KW	ELECTRICAL DATA		
								VOLTS	PHASE	HERTZ
F.A.F-01	SEE DRAWINGS	ROOF	AXIAL	1	800	250	2	220	1	50
E.A.F-01	SEE DRAWINGS	ROOF	AXIAL	1	640	200	1.5	220	1	50
E.A.F-02	SEE DRAWINGS	CEILING	AXIAL	1	100	-	0.04	220	1	50
E.A.F-03	SEE DRAWINGS	CEILING	AXIAL	1	50	-	0.02	220	1	50

SPLIT UNITS SCHEDULE

REF. NO.	NOMINAL COOLING CAPACITY (TR)	AIR (L/S)	IN DOOR UNIT TYPE	ESP (PA)	POWER (KW)	VOLT.	PHASE Ø	QTY
IUW-1.5 TR	1.5	230	HIGH WALL	-	2.4	220	1	8

NOTES:

- NOMINAL CAPACITY IS BASED ON

1- ENTERING AIR TEMP : 23°C (COOLING)
2- OUT DOOR TEMP : 35 °C (SUMMER)

United Nations Development Programme (UNDP)

Project: NEW BUILDING REPLACING UNDSS OLD BUILDING

Location: SANAA - Yemen

Drawing Title: VENTILATION SYSTEM DETAILS(2)

Design By : UNDP Engineering Unit

Drawing Type: MECHANICAL

Status : FINAL

Date: 13 APRIL 2021

Drawing No. 6

LEGEND	DESCRIPTION
ELECTRICAL PANEL	*ELECTRICAL DISTRIBUTION BOARD SIGNAGE*
Fire alarm call point	*FIRE ALARM CALL POINT SIGNAGE*
	FIRE EXTINGUISHER
	FIRE EXTINGUISHER SIGNAGE

SECOND FLOOR

United Nations Development Programme (UNDP)

Project: *NEW BUILDING REPLACING UNDSS OLD BUILDING*

Location: *SANAA - Yemen*

Drawing Title: SECOND FLOOR SIGNAGE

Design By : UNDP Engineering Unit

Drawing Type: *Electrical*

Status : *FINAL*

Date: 13 APRIL 2021

Drawing No. 7

LEGEND	DESCRIPTION
ELECTRICAL PANEL	ELECTRICAL DISTRIBUTION BOARD SIGNAGE
Fire alarm call point	FIRE ALARM CALL POINT SIGNAGE
	FIRE EXTINGUISHER
	FIRE EXTINGUISHER SIGNAGE

FIRST FLOOR

United Nations Development Programme (UNDP)

Project: NEW BUILDING REPLACING UNDSS OLD BUILDING

Location: SANAA - Yemen

Drawing Title: FIRST FLOOR SIGNAGE

Design By : UNDP Engineering Unit

Drawing Type: Electrical

Status : FINAL

Date: 13 APRIL 2021

Drawing No. 8

LEGEND	DESCRIPTION
ELECTRICAL PANEL	*ELECTRICAL DISTRIBUTION BOARD SIGNAGE*
Fire alarm call point	*FIRE ALARM CALL POINT SIGNAGE*
	FIRE EXTINGUISHER
	FIRE EXTINGUISHER SIGNAGE

GROUND FLOOR

United Nations Development Programme (UNDP)

Project: *NEW BUILDING REPLACING UNDSS OLD BUILDING*

Location: *SANAA - Yemen*

Drawing Title: *GROUND FLOOR SIGNAGE*

Design By : *UNDP Engineering Unit*

Drawing Type: *Electrical*

Status : *FINAL*

Date: *13 APRIL 2021*

Drawing No. 9

LEGEND	DESCRIPTION
ELECTRICAL PANEL	*ELECTRICAL DISTRIBUTION BOARD SIGNAGE*
Fire alarm call point	*FIRE ALARM CALL POINT SIGNAGE*
	FIRE EXTINGUISHER
	FIRE EXTINGUISHER SIGNAGE

BASEMENT FLOOR

United Nations Development Programme (UNDP)

Project: NEW BUILDING REPLACING UNDSS OLD BUILDING

Location: SANAA - Yemen

Drawing Title: BASEMENT FLOOR SIGNAGE

Design By : UNDP Engineering Unit

Drawing Type: Electrical

Status : FINAL

Date: 13 APRIL 2021

Drawing No. 10