Invitation to Bid

ITB – 056/14

ESTABLISHMENT OF MINI PLAYGROUNDS IN AL DAIR & AL NASHWAH, IN THE MAJNOON AREA OF BASRAH, IRAQ

Volume II

Section 3

Schedule of Requirements and Technical Specifications

Part 1 - Scope of Works
Part 2 - General Requirements
Part 3 - Technical Specifications
Part 4 - Drawings

June 2014

Table of Content

1 PART 1: - SCOPE OF WORKS 4

1.1 OBJECTIONS AND ENVISGED OUTCOMES 4
1.1.1 General 4
1.1.2 Objectives 5
1.1.3 Expected Outcomes 5

1.2 PROJECT AREA 5

1.3 PROJECT DESCRIPTION 5

1.4 WORKS TO BE PROVIDED 5
1.4.1 Nature of Contract 5
1.4.2 Works To Be Provided Under This Contract 5
1.4.3 Works To Be Provided By The Local Council / Municipality 6
1.4.4 Transportation of Materials 6
1.4.5 Test and Commissioning 6

1.5 CONTRACT DURATION 6

1.6 MATERIALS TO BE PROVIDED 7
1.6.1 Materials to be provided by the Contractor 7
1.6.2 Materials to be Provided by UNDP 7

1.7 FACILITIES TO BE PROVIDED 7
1.7.1 Facilities Provided by UNDP 7
1.7.2 Facilities Provided by The Contractor 7

1.8 GENERAL RESPONSEBILITIES / REQUIREMENTS 7
1.8.1 Reporting 7
1.8.2 Contents of Report 7
1.8.3 Photography & Video Material 7
1.8.4 Close Out Report 8
1.8.5 Translation of Documents 8
1.8.6 Project Specific Support Services 9

1.9 DRAWINGS 9

2 PART 2: - GENERAL REQUIREMENTS 10

2.1 SITE OFFICES 10

2.2 SERVICES 10

2.3 SAMPLES, TESTING & INSPECTION 10

2.4 HEALTH, SAFETY & ENVIROMENTAL (HS&E) REQUIREMENTS 10

2.5 SITE SURVEY 10

2.6 SITE PREPARATION 10

2.7 MEASUREMENT OF QUANTITIES 10

2.8 TRANSPORTATION OF MATERIALS 11

2.9 REDUNDANT EQUIPMENT 11

2.10 PROGRAMME FOR THE WORKS 11

3 PART 3 – TECHNICAL SPECIFICATIONS 12

3.1 GENERAL TECHNICAL SPECIFICATIONS FOR BUILDING WORKS IN IRAQ 12

4 PART 4: - DRAWINGS 18

1 PART 1: - SCOPE OF WORKS

Shell Iraq Petroleum Development B.V. (Shell) has been working with United Nations Development Programme (UNDP) Iraq on a multi-faceted programme in Basrah Governorate. The motivation for Shell's initial request to UNDP was to implement (1) Hiring of local (skilled) labourers and service providers as a good business practice and a longer term cost-reduction measure, and (2) Local area development activities and local community incorporation to reduce social unrest, a major cause of past disruptions of oil field production.

The Oil & Gas Industry is of critical importance in Basra Governorate, especially after the Government of Iraq granted work permits to oil companies in order to invest in this Governorate. As a result, approximately 5,000-7,000 job opportunities in skills required by the Oil & Gas Industry – including welding, rigging, scaffolding, electrical works, civil works etc., – are expected to be created in the next five years. Initial scoping has seen a high demand for many of these positions now, and this demand is expected to rise sharply. International Oil Companies (IOCs) operating in Basrah and throughout Iraq are strongly encouraged to maximize their hiring of Iraqi employees and use of goods and services supplied locally. However, this has proven difficult as economic difficulties and wars experienced by Iraq over the previous 30 years have depleted the nation's supply of skilled labour and its small business base. If the local supply of qualified workers remains insufficient for IOC production/construction needs, foreign contractors and labourers will have to be imported, leading to significantly higher operating costs for IOCs, and jobs given to internationals, thus prolonging local unemployment and leading to possible future discontent and social unrest.

Under the **Local Area Development Programme (LADP)** implemented from 2007-2010, seven UN Agencies have been working in districts in Northern, Central and Southern Iraq on local area development planning. The LADP programme was delivered through national Area Co-ordinators (from ILO/UNOPs working in Sulymaniyah; UN-Habitat working in Babylon and UNDP in the Marshlands area (Basrah, Missan and Thi-Qar) who led a wide range of representatives from the local population through a participatory planning process to determine local development priorities across the sectors from water and sanitation to education, health and municipal services. This project is expanding this LADP approach in Al Dair and Al Nashwah Sub-Districts in the Majnoon Area, aiming at improving access for all to quality essential service delivery, and livelihood revival and diversification. This stands to benefit Shell's reputation as well as to support local vulnerable populations.

1.1 OBJECTIONS AND ENVISGED OUTCOMES

1.1.1 General

The LADP project's primary envisaged outcome is to assist local government and village leaders to develop a process whereby local communities through their chosen representatives together with civil society and the private sector are able to articulate their local development priorities. Communities will monitor the delivery of services and participate in the stewardship of local assets and resources thereby contributing to increased transparency and accountability. This process ensures representation of interest groups (i.e. farmers and business men) and inclusion of the vulnerable and underserved groups. The focus of assistance will be to build awareness and participation in local governance. A network of representatives within the communities will be identified to form a platform to raise community concerns and engage in dialogue with all of the

development partners, including the private sector. Another envisaged outcome is to implement certain projects that are identified by community members as critically needed.

1.1.2 Objectives

As part of Shell's road safety initiative in the area of Majnoon, UNDP has identified the need to construct playgrounds and mini-football fields. The playground areas will provide a safe place for children to play and families to congregate away from the busy roads used by large trucks operating at Majnoon that run through the communities. The construction of playgrounds and mini-football fields will have a high impact on the community by providing a safe space for children.

1.1.3 Expected Outcomes

The expected outcomes are as follows:

- Promote play and healthy activities for children;
- Provide a safe space for children in the communities;
- Reduce number of children near busy roads.

1.2 PROJECT AREA

The proposed playgrounds are located, in the central and southern areas of Al Dair and Al Nashwah, in the Majnoon area of Basrah, Iraq as reflected in the attached drawings

1.3 PROJECT DESCRIPTION

The project aims to establish four (4) playground/mini-football field facilities. Each facility will have the capacity to benefit approximately 200 children and provide separate areas with facilities for children between the ages of 5 and 12 and also for older children from 12 and up. Each facility will include:

- Mini-football field for 5 on 5 play;
- Playground equipment, such as Play Tower, Swings, Seesaws, etc.;
- Outdoor fitness facilities for youth and adults;
- Green Park with a theme of "Peace".

1.4 WORKS TO BE PROVIDED

The overall project is designed to include local contractors from the area, participation of the Local Councils together with national and international suppliers / contractors. Accordingly this project is divided into two (2) separate activities as described hereunder.

1.4.1 Nature of Contract

This contract includes supply, delivery, installation, testing and commissioning of civil, electrical, mechanical, etc., materials, playground equipment and appropriate training for the "Works" detailed in this Scope of Works, the attached Technical Specifications and Price Schedule/Bill of Quantities.

1.4.2 Works To Be Provided Under This Contract

The Works include the establishment of four (4) playgrounds in the central and northern areas of Al Dair and Al Nashwah as summarized below:

- Preparation and levelling of areas for playground equipment;
- Import of appropriate soil and compaction;
- Drainage system;

- Interlock paving for walking and fitness area for adults;
- Fencing of the areas;
- Establishment of the football area;
- Concrete tables and seating;
- Refuse bins;
- Water supply for irrigation system;
- Area lighting;
- Sponsor's "Bill Board";
- Signs and Memorial Plaque;
- Concrete slab and rubber tiles in in the playground area;
- Concrete footings for Outdoor Fitness & Playground Equipment;
- Playground equipment;
- Outdoor Fitness equipment;
- Recommended spares parts as deemed necessary and approved by UNDP;
- Operating and maintenance manuals

The works including supply, install all the required materials and equipment, testing and commissioning of all related equipment and as detailed in the Price Schedule/Bills of Quantities and all other ancillary work required to complete the entire scope of works.

The Works includes provision of required manpower, machinery and materials for the works as described hereunder and under the Technical Specifications, Price Schedule/Bills of Quantities and Drawings.

1.4.3 Works To Be Provided By The Local Council / Municipality

The Local Council and the Municipality of Al Nashwah will be responsible to supply and install the following:

- Potting soil and fertilizers for plants;
- Trees, shrubs, plants, etc.;
- Water supply connection point;
- Drinking water;
- Operation and maintenance of the playgrounds

1.4.4 Transportation of Materials

Transportation of materials shall be contractor's responsibility.

1.4.5 Test and Commissioning

The scope of work includes testing and commissioning of all the equipment installed by the contractor.

1.5 CONTRACT DURATION

All works shall be completed within eight (8) weeks of contract award.

1.6 MATERIALS TO BE PROVIDED

1.6.1 Materials to be provided by the Contractor

The contractor shall be required to provide all equipment and materials as listed under the Bills of Quantities and Specifications" in accordance with the specifications provided.

1.6.2 Materials to be Provided by UNDP

No materials will be supplied by UNDP

1.7 FACILITIES TO BE PROVIDED

1.7.1 Facilities Provided by UNDP

No site facilities shall be provided by UNDP.

1.7.2 Facilities Provided by The Contractor

All required facilities for proper development of all phases of the project shall be its own responsibility. Unless otherwise explicitly called upon, any facilities shall be deemed included and/or surcharged in/to the contractor's price.

1.8 GENERAL RESPONSEBILITIES / REQUIREMENTS

The Services shall also include some duties normally performed by UNDP field staff, which includes the establishment and maintenance of contacts with counterparts and other stakeholders. These shall include, yet not be limited to, liaising and maintaining strong working relations with all stakeholders and obtain all required letters, approvals, documentation…etc.

1.8.1 Reporting

Given the remote management nature of the project and the fact that UNDP cannot maintain prolonged and/or frequent on-the-ground presence, one of UNDP's management tools is through comprehensive progress reports supported by photographs, videos and similar materials from its implementation partners. The same also applies for illustrating project impacts.

1.8.2 Contents of Report

During implementation the contractor shall provide UNDP with weekly progress reports including yet not limited to:

- Meetings held with counterparts, contractors …..etc.
- Progress reporting, delays….etc
- Staff employed by contractor, sub-contractors, counterparts.
- Financial status, predicted cash flow, expected variations.
- Technical Issues.

1.8.3 Photography & Video Material

The contractor shall provide adequate photographs and video materials as an integral part of any submitted report with the purpose of illustrating progress, impact, elements requiring particular

attention and so forth. Photographs and videos shall also be captured and submitted as frequent as requested by UNDP.

While in certain instances the photographs/videos shall be required to portray the status of technical elements, which necessitates that these be of technical nature portraying an engineering view of the photographed element (i.e. defective bearing, leaking pipeline, broken cable, defective concrete, etc), in other instances the photographs/videos are rather required for general illustrative purposes and should convey a general inclusive overview for non-engineering purposes. It should be noted that these should have an artistic essence to them.

The contractor is alerted to the particular requirements for non-engineering purposes photography/videos, which are required to achieve several purposes including yet not limited to: Conveying the overall extent and magnitude of the intervention.

- Conveying the overall intervention nature.
- Conveying a broad overview of the overall intervention.
- Conveying the pre-intervention conditions (i.e. impact of not having the intervention in place such as streets flooded with wastewater, child without access to water and the like).

Conveying the post-intervention conditions (i.e. impact of having the intervention in place such as dry and clean streets, child with access to water and the like), which are generally used to assess the intervention impact.

Although many professionals have adequate capacity to capture photographs and videos, the contractor shall ensure a professional photographer/cameraman is appointed for this particular purpose that has adequate capacity to capture technical and non-technical photographs with the required artistic essence.

Photographs and videos must be accompanied by basic caption information linked to each image file name identifying the date, location, subject and (if relevant) UNDP activity. The name and contact of the staff photographer should also be provided for follow-up queries.
The contractors cost shall be deemed included and/or surcharged in/to the rates for each activity.

1.8.4 Close Out Report

Upon completion of all activities of the project the contractor shall submit a collective Close-Out Report which reflects all aspects encountered during implementation inclusive of all original documentation, photographs…etc. The report shall first be submitted in a draft form to UNDP. The contractor shall do a report presentation during which UNDP shall present and discuss their comments and remarks.

The report shall then be presented in its final form following incorporation of all UNDP comments and remarks.

The contractor shall, at least, submit two (2) hard copies to UNDP (1) soft copy to UNDP.

1.8.5 Translation of Documents

The contractor shall not convey any Arabic language correspondences to UNDP all official correspondences with the counterparts and other relevant material shall be translated to the English language by a certified translator. The contractor shall always submit the Arabic version together

with the translated version including due stamping and sealing of the translated version with sufficient proof that the utilized translator is certified the Government.

The contractors cost shall be deemed included and/or surcharged in/to the rates for each activity.

1.8.6 Project Specific Support Services

The support services may include fees for payments settled by the contractor on behalf of UNDP for the ongoing activities under the contract. Such as, but not limited to, payments for placing advertisements, printing services, renting site equipment, technical team resources support and so forth. The payment shall be settled based on clear instructions from UNDP after at least three quotations are collected and submitted by the contractor to UNDP and the lowest responsive quoted price is approved by UNDP.

UNDP, upon the requirement, shall instruct the contractor to perform the above mentioned services by collecting a minimum of three simple quotations for each type of services.

1.9 DRAWINGS

The attached drawings are to be read together with the Scope of Works, Technical Specifications and the Price Schedule/Bills of Quantities.

PART END

2 PART 2: - GENERAL REQUIREMENTS

2.1 SITE OFFICES

Within one (1) week of the "Commencement Date", the contractor shall establish a temporary site office which shall include one (1) office for UNDP's engineer.

2.2 SERVICES

The Contractor shall be responsible for the provision of services such as electricity, water, sewerage, telecommunications and roads and other facilities required to execute works.

2.3 SAMPLES, TESTING & INSPECTION

Cost of all samples and testing shall be borne by the Contractor and deemed to be included in the Contract price.

2.4 HEALTH, SAFETY & ENVIROMENTAL (HS&E) REQUIREMENTS

The Contractor throughout the execution and completion of the works shall fully comply with international recognized safety regulations specified under the Technical Specifications i.e.:

- Take care for the safety of all persons engaged at site works,
- Use reasonable efforts to keep the site and works clear of unnecessary obstruction so as to avoid danger to these persons,
- Provide and maintain electrical materials, diesel generators, guarding and watching of the works until completion and taking over of the works,
- Take all reasonable steps to protect the environment on and off site and to avoid damage or nuisance to persons or to property of the public or others resulting from pollution, noise or other cause arising as a consequence of his method of operation.
- Provide to all site workers safety clothes, equipment, materials, etc., to perform ongoing activity such as portable earths, safety helmets, working and insulated gloves and safety shoes.

2.5 SITE SURVEY

The Bidder shall be deemed to have inspected and examined the site and its surroundings, and to have satisfied himself with site conditions before submitting his Bid.

2.6 SITE PREPARATION

The Contractor shall be responsible for all site preparation works.

2.7 MEASUREMENT OF QUANTITIES

UNDP reserves right to increase, decrease quantities or cancel any items in the BoQ as per actual requirements.

Bidders shall familiarize themselves with the conditions on site and actual quantities required as the prices submitted in the bid shall be inclusive of everything required for successful completion of the project.

2.8 TRANSPORTATION OF MATERIALS

The Contractor shall be responsible for transport of all equipment to the site including loading, off-loading, etc. and all costs and expenses involved in transport from the warehouse storage works to the sites.

The Contractor's responsibility shall also include the construction of an adequate access way, if necessary, for construction and delivery of plant from the public highway to each site.
The Contractor shall ensure that damage to any public or private roads or footpaths used by any vehicles or plant proceeding to or from the site kept to a minimum and shall be responsible for the cost of all repairs necessary to restore such roads or footpaths at least to the condition previously obtaining.

2.9 REDUNDANT EQUIPMENT

Redundant equipment as identified by the Engineer shall be carefully removed and delivered to the warehouse as indicated by the Engineer

The contractor shall keep inventory of the quantities and obtain signature of acceptance from the applicable authority.

2.10 PROGRAMME FOR THE WORKS

The Contractor shall within one (1) week of the “Commencement Date” submit a time-scaled linked bar chart in “Microsoft Projects” for approval by the UNDP.

The program shall identify all key activities required to complete the works, show intermediate milestones for the purpose of assessing progress on the works and the proposed timing for all Contract deliverable’s including documentation.

This program shall be maintained by the Contractor throughout the project and shall only be varied with the approval of the Engineer.

PART END

3 PART 3 – TECHNICAL SPECIFICATIONS

3.1 GENERAL TECHNICAL SPECIFICATIONS FOR BUILDING WORKS IN IRAQ

The works shall be carried out strictly in accordance with **UNDP's General Technical Specifications for Building Works in** Iraq, Rev 0, which is **available upon request** and as summarized below:

1 SECTION 1 – GENERAL REQUIREMENTS

1.1 GENERAL TECHNICAL SPECIFICATIONS
1.2 MARKINGS
1.3 PACKING AND SHIPPING
1.4 SERVICE CONDITIONS
1.5 ELECTRICAL SYSTEM CONDITIONS
1.6 CONTRACT MANAGEMENT
1.7 WORKING PRACTICES
1.8 QUALITY ASSURANCE REQUIREMENTS
1.9 DRAWINGS
1.10 INSPECTIONS AND TESTING
1.11 CO-ORDINATION AND MEETINGS
1.12 PROJECT COORDINATION
1.13 SUBMITTALS
1.14 SHOP DRAWINGS, PRODUCT DATA AND SAMPLES
1.15 CONTRACT CLOSE-OUT
1.16 CLEANING

2 SECTION 2 - BUILDING DEMOLITION

2.1 GENERAL
2.2 BUILDING DEMOLITION
2.3 HAZARDOUS MATERIALS

3 SECTION 3 - GROUND INVESTIGATION

3.1 GENERAL
3.2 BOREHOLES
3.3 PITS AND TRENCHES
3.4 SOIL SAMPLING
3.5 IN SITU TESTING, INSTRUMENTATION AND MONITORING
3.6 LABORATORY TESTING

4 SECTION 4 – PILING WORKS

4.1 GENERAL REQUIREMENTS FOR PILING WORK
4.2 GENERAL REQUIREMENTS FOR CONCRETE PILES

5 SECTION 5 - CONCRETE

5.1 GENERAL
5.2 AGGREGATES
5.3 CEMENT
5.4 WATER
5.5 ADMIXTURES

5.6 PROPERTY REQUIREMENTS
5.7 BATCHING AND MIXING
5.8 TRANSPORTATION AND PLACING OF CONCRETE
5.9 FORMWORK
5.10 CURING
5.11 REINFORCEMENT
5.12 JOINTS
5.13 INSPECTION AND TESTING OF HARDENED CONCRETE
5.14 PROTECTIVE TREATMENTS FOR CONCRETE
5.15 HOT WEATHER CONCRETING
5.16 MISCELLANEOUS
5.17 TESTING OF WATER RETAINING STRUCTURES

6 SECTION 6 - UNDERGROUND WORKS
6.1 GENERAL
6.2 SITE CLEARANCE
6.3 EARTHWORKS
6.4 ASPHALT WORKS
6.5 KERBS, FOOTWAYS AND PAVED AREAS
6.6 ROAD LIGHTING
6.7 ROAD DRAINAGE
6.8 MISCELLANEOUS

7 SECTION 7 - SEWERAGE
7.1 GENERAL
7.2 EARTHWORKS
7.3 PIPES AND FITTINGS MATERIALS
7.4 PIPELINE INSTALLATION
7.5 PENSTOCKS AND APPURTENANCES
7.6 METAL WORKS
7.7 GLASS REINFORCED PLASTICS
7.8 PAINTING AND PROTECTIVE COATINGS
7.9 TRENCHLESS PIPELINE CONSTRUCTION
7.10 PIPELINE CLEANING AND INSPECTION SURVEY
7.11 SEWER REHABILITATION
7.12 VACUUM SEWERAGE SYSTEM

8 SECTION 8 - MECHANICAL AND ELECTRICAL WORKS
8.1 GENERAL
8.2 SUBMERSIBLE PUMPS
8.3 CENTRIFUGAL PUMPS (VERTICAL SPINDLE, DRY-WELL TYPE)
8.4 SUMP PUMPS

9 SECTION 9 - EARTH WORKS
9.1 GENERAL
9.2 EXCAVATION
9.3 FILLING
9.4 UTILITY TRENCHES
9.5 INSTALLATION OF PROTECTIVE MEMBRANES

10 SECTION 10 - MASONRY

10.1 GENERAL
10.2 MORTAR AND GROUT
10.3 ACCESSORIES
10.4 UNIT MASONRY
10.5 MASONRY LAYING

11 SECTION 11 - ROOFING
11.1 GENERAL
11.2 MEMBRANE ROOFING
11.3 METAL AND PLASTIC ROOFING
11.4 ROOF AND DECK INSULATION
11.5 ROOFING TILES AND SHINGLES

12 SECTION 12 - THERMAL INSULATION OF BUILDINGS
12.1 GENERAL
12.2 BUILDING INSULATION
12.3 COLD STORES

13 SECTION 13 - STRUCTURAL STEEL WORKS
13.1 GENERAL
13.2 MATERIALS
13.3 DRAWINGS
13.4 FABRICATION
13.5 WELDING
13.6 BOLTING
13.7 ACCURACY OF FABRICATION
13.8 ERECTION
13.9 ACCURACY OF ERECTED STEELWORK
13.10 PROTECTIVE TREATMENT

14 SECTION 14 - METAL WORKS
14.1 GENERAL
14.2 MATERIAL TYPES AND FINISHES
14.3 METAL DOORS AND WINDOWS
14.4 ARCHITECTURAL METAL WORK
14.5 LIGHT METAL SUPPORT AND CLADDING SUPPORT
14.6 WORKMANSHIP

15 SECTION 15 - CARPENTRY, JOINERY AND IRONMONGERY
15.1 GENERAL
15.2 WOOD TREATMENT
15.3 STRUCTURAL TIMBER
15.4 ARCHITECTURAL TIMBER
15.5 JOINERY
15.6 FASTENERS AND ADHESIVES
15.7 IRONMONGERY

16 SECTION 16 - PLUMBING WORKS
16.1 GENERAL
16.2 WATER DISTRIBUTION
16.3 PLUMBING PIPEWORK IN TRENCHES

16.4 COLD WATER STORAGE
16.5 HOT WATER STORAGE
16.6 COMMISSIONING OF SYSTEMS
16.7 PLUMBING FOR GASES
16.8 STEAM BOILER

17 SECTION 17 - DRAINAGE WORKS
17.1 GENERAL
17.2 INTERNAL DRAINAGE WORKS
17.3 EXTERNAL DRAINAGE WORKS
17.4 DRAINAGE PIPES IN TRENCHES
17.5 STRUCTURES RELATED TO DRAINAGE WORK
17.6 SURFACE WATER DRAINAGE
17.7 COMMISSIONING OF SYSTEMS

18 SECTION 18 - ELECTRICAL WORKS
18.1 GENERAL PROVISIONS FOR ELECTRICAL INSTALLATION
18.2 FACTORY BUILT ASSEMBLIES (FBA'S)
18.3 PROTECTIVE DEVICES
18.4 MOTOR STARTERS
18.5 VARIABLE SPEED CONTROLLERS
18.6 CABLES AND SMALL WIRING
18.7 CONDUITS AND CONDUIT BOXES
18.8 TRUNKING
18.9 CABLE TRAYS
18.10 WIRING ACCESSORIES AND GENERAL POWER
18.11 LIGHT FITTINGS
18.12 EMERGENCY LIGHTING
18.13 TELEPHONE INSTALLATIONS
18.14 STRUCTURED CABLING SYSTEMS
18.15 ELECTRIC MOTORS
18.16 POWER FACTOR CORRECTION CAPACITORS
18.17 DIESEL GENERATOR SET
18.18 UNINTERRUPTIBLE POWER SUPPLY SYSTEMS
18.19 SOUND AND CALL SYSTEMS
18.20 EARTHING AND BONDING
18.21 INSPECTION AND TESTING

19 SECTION 19 - AIR CONDITIONING REFRIGERATION AND VENTILATION
19.1 GENERAL
19.2 CENTRAL REFRIGERATION & AIR CONDITIONING EQUIPMENT950
19.3 UNITARY EQUIPMENT
19.4 AIR HANDLING EQUIPMENT
19.5 DUCTWORK AND AIR-SIDE EQUIPMENT
19.6 THERMAL INSULATION
19.7 EXHAUST FANS
19.8 ACCESSORIES

20 SECTION 20 - FIRE FIGHTING AND FIRE FIGHTING SYSTEMS
20.1 GENERAL
20.2 FIRE ALARM AND DETECTION SYSTEMS

20.3 ANALOGUE ADDRESSABLE FIRE ALARM SYSTEM
20.4 FIRE FIGHTING SYSTEM
20.5 TESTING AND COMMISSIONING

21 SECTION 21 - FINISHING TO BUILDINGS
21.1 GENERAL
21.2 LATH AND PLASTER
21.3 DRY LINING (WALLBOARD)
21.4 SPECIAL WALL SURFACES
21.5 TILES
21.6 TERRAZZO
21.7 STONE FLOORING
21.8 UNIT MASONRY FLOORING
21.9 FLOOR SCREEDS AND TREATMENTS
21.10 JOINTS, CAULKING AND SEALANTS
21.11 RECESSED DUCT COVERS
21.12 CARPETING
21.13 OTHER FLOOR COVERINGS
21.14 CEILINGS

22 SECTION 22 - GLASS & GLAZING
22.1 GENERAL
22.2 GLASS
22.3 WORKMANSHIP

23 SECTION 23 - PAINTING & DECORATING
23.1 GENERAL
23.2 SURFACE PREPARATION FOR PAINTING
23.3 PRIMERS, PAINTS AND COATINGS
23.4 DECORATIVE PAPERS AND FABRICS
23.5 DECORATIVE PAPERS AND FABRICS

24 SECTION 24 - EXTERNAL WORKS
24.1 GENERAL
24.2 BLOCK PAVED AREAS
24.3 FENCES AND GATES
24.4 FOUNTAINS AND AQUATIC FEATURES
24.5 SITE FURNITURE
24.6 FLAG POLES
24.7 PROTECTIVE OR SHADE COVER SYSTEMS
24.8 PLAY FIELD AND PARK EQUIPMENT
24.9 MISCELLANEOUS OTHER EXTERNAL WORKS

25 SECTION 25 - LANDSCAPE
25.1 LANDSCAPE PLANTING

26 SECTION 26 - HEALTH SAFETY AND ENVIRONMENTAL PROVISIONS
26.1 LIFE SAVING RULES
26.2 PROTECTIVE CLOTHING
26.3 WORK AREA
26.4 FIRST AID

26.5 FIRE PRECAUTIONS
26.6 WELFARE FACILITIES
26.7 CONTROL OF HAZARDS TO HEALTH
26.8 HS&E MOBILIZATION CHECKLIST

27 SECTION 27 – INSTRUCIONS FOR PREPARATION OF OPERATION AND MAINTENANC MANUALS
27.1 GENERAL PROVISIONS
27.2 CONTENT OF O&M MANUAL
27.3 ASSET GROUPS

PART END

Invitation To Bid

ITB – 056/14

FOR

ESTABLISHMENT OF MINI PLAYGROUNDS IN AL DAIR & AL NASHWAH, IN THE MAJNOON AREA OF BASRAH, IRAQ

Volume II

Section 3

PART 4: - DRAWINGS

United Nations Development Programme
برنـــامـج الأمـــــم الـمـــــتحدة الإنـمـــــائي

ESTABLISHMENT OF MINI PLAYGROUNDS IN AL DAIR & AL NASHWAH SUB-DISTRICTS, MAJNOON AREA OF BASRAH, IRAQ

DRAWINGS

August 2014

T - 00	Index
T - 01	Google Earth Map_Playgrounds #1 & 2_Al Dair
T - 02	Google Earth Map_Plaground #1_Al Dair
T - 03	General Layout #1 of Playground #1_Al Dair
T - 04	General Layout #2 of Playground #1_Al Dair
T - 05	Google Earth Map_Playground #2_Al Dair
T - 06	General Layout #1 of Playground #2_Al Dair
T - 07	General Layout #2 of Playground #2_Al Dair
T - 08	Google Earth Map_Playgrounds #1 & 2_Al Nashwah
T - 09	Google Earth Map_Plaground #1_Al Nashwah
T - 10	General Layout #1 of Playground #1_Al Nashwah
T - 11	General Layout #2 of Playground #1_Al Nashwah
T - 12	Google Earth Map_Playground #2_Al Nashwah
T - 13	General Layout #1 of Playground #2_Al Nashwah
T - 14	General Layout #2 of Playground #2_Al Nashwah
T - 15	Typical Elevations Plan Layout
T - 16	Typical Elevations Layout
T - 17	Typical Elevations Details Layout
T - 18	Typical Fence's Footing Plan Layout
T - 19	Typical Floor Finish Level Plan Layout
T - 20	Typical Floor Cross Sections & Details
T - 21	Typical Mini Football Court's Markings Layout
T - 22	Typical Structural Details #1 Layout / Memorial Plaque, Concrete Tables & Concrete Benches
T - 23	Typical Structural Details #2 Layout / Sponsor Billboard & Warning Billboard
T - 24	Typical Structural Details #3 Layout / Football Goal Details
T - 25	Typical Irrigation Plan & Details Layout
T - 26	Typical Sewerage Details
T - 27	Typical Equipment List
T - 28	Children Playground Area (Age 1 - 6 Years) 3D Photos
T - 29	Fitness Area (Age 7+ Years) 3D Photos

UNITED NATIONS DEVELOPMENT PROGRAMME

PROJECT (NAME & NO.)
Establishment of Mini Playgrounds in Al Dair & Al Nashwah Sub-Districts, Majnoon Area of Basrah, Iraq

DESIGN GROUP
Architectural

Sheet no.

DRWG. TITLE
Index

DRWG. STATUS

NOT APP.	APP.+COM	APPRVD

DRWG. NO.
T - 00

SCALE

DESIGN	DRAWN	CHECKED

T - 01 Google Earth Map_Playgrounds # 1 & 2_Al Dair

Google earth

miles 9

km 10

T - 02 Google Earth Map_Playground #1_Al Dair

Google earth

feet 3000
km 1

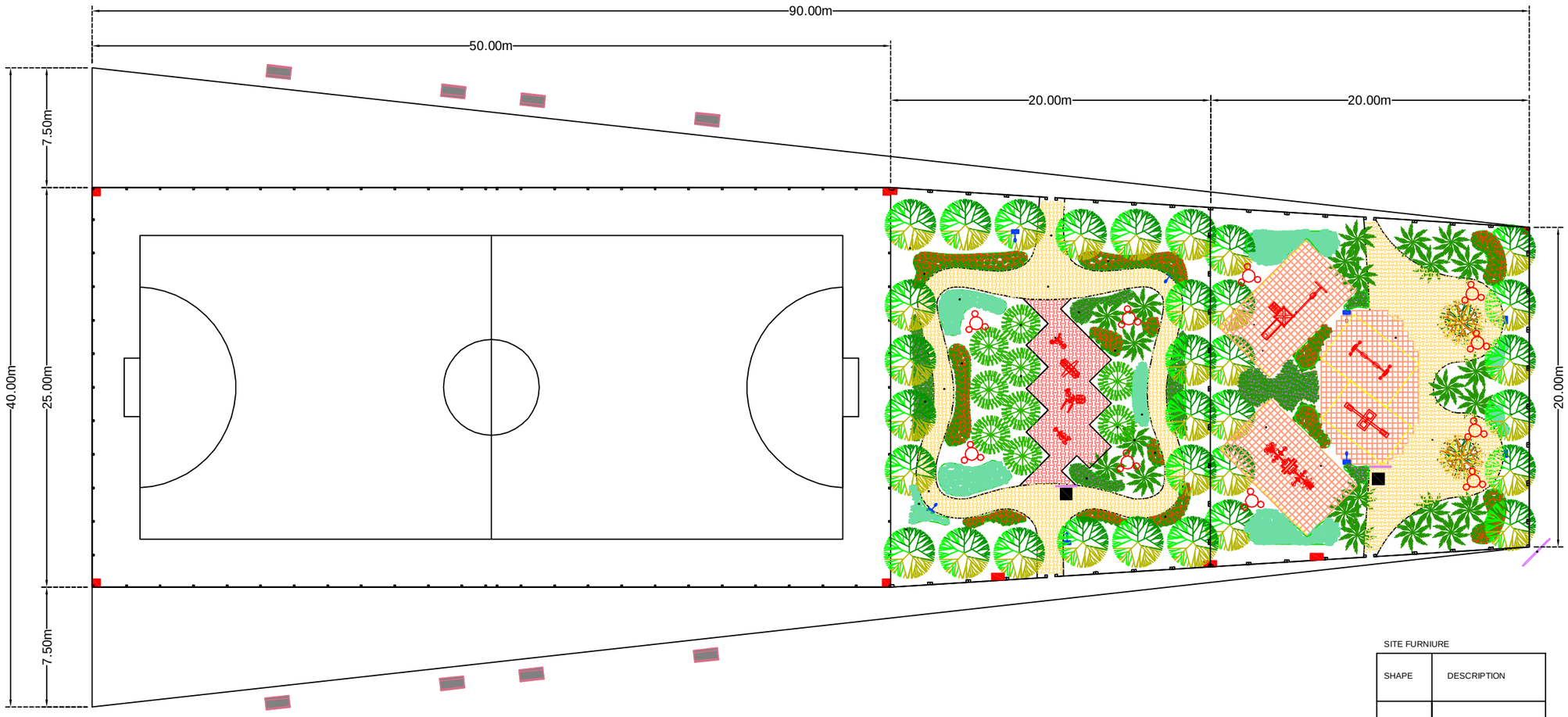

PLANTING SCHEDULE (TREES)

SHAPE	DESCRIPTION	SCIENTIFIC NAME	COMMON NAME	ARABIC NAME
	TREES TYPE 1	ACACIA cyanophylla	MOMOSA	اكاسيا مسرية
	TREES TYPE 2	PHOENIX dactilifera	DATE PALM	نخيل
	TREES TYPE 3	CONOCARPUS lancifolius	QALAB	دسي سخاني
	TREES TYPE 4	ALBIZA julibrissin	SILK TREE	البريدلة

PLANTING SCHEDULE (SHRUBS)

SHAPE	DESCRIPTION	SCIENTIFIC NAME	COMMON NAME	ARABIC NAME
	SHRUBS TYPE 1	PELARGONIUM hortorum	COMMON GERANIUM	جيرنيوم
	SHRUBS TYPE 2	LAVANDULA angustifolia	LAVENDER	للفندر
	SHRUBS TYPE 3	LANTANA camara	COMMON LANTANA	أم كلخير

PAVEMENT SCHEDULE

SHAPE	DESCRIPTION
	INTERLOCK TILES Type 1
	INTERLOCK TILES Type 2
	RUBBER PAVEMANT

SITE FURNIURE

SHAPE	DESCRIPTION
	CONCRETE BENCH
	SPONSOR BILLBOARD
	WASTE BIN
	CONCRETE TABLE & CONCRETE BENCHES
	WARNING BILLBOARD
	MEMORIAL PLAQUE

UNITED NATIONS DEVELOPMENT PROGRAMME

PROJECT (NAME & NO.)
Establishment of Mini Playgrounds in Al Dair & Al Nashwah Sub-Districts, Majnoon Area of Basrah, Iraq

DESIGN GROUP: Architectural

Sheet no.

DRWG. TITLE: General Layout #1 of Playground #1_Al Dair

DRWG. STATUS: NOT APP. | APP.-COM | APPRVD

DRWG. NO.: T - 03

SCALE

DESIGN | DRAWN | CHECKED

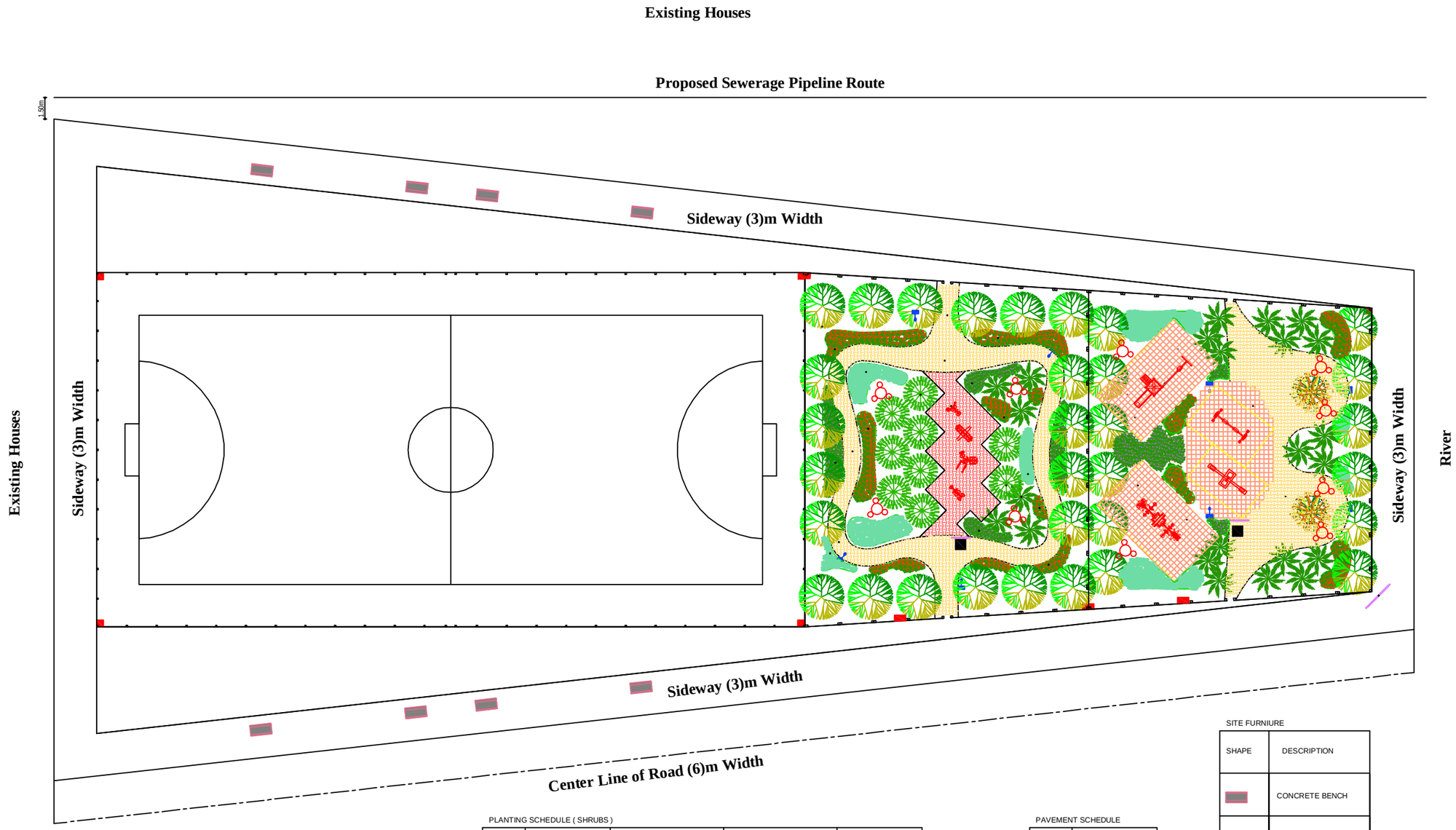

PLANTING SCHEDULE (TREES)

SHAPE	DESCRIPTION	SCIENTIFIC NAME	COMMON NAME	ARABIC NAME
	TREES TYPE 1	ACACIA cyanophylla	MOMOSA	اكاسيا مسرية
	TREES TYPE 2	PHOENIX dactilifera	DATE PALM	نخيل
	TREES TYPE 3	CONOCARPUS lancifolius	QALAB	قنس سخافي
	TREES TYPE 4	ALBIZA julibrissin	SILK TREE	البزمانة

PLANTING SCHEDULE (SHRUBS)

SHAPE	DESCRIPTION	SCIENTIFIC NAME	COMMON NAME	ARABIC NAME
	SHRUBS TYPE 1	PELARGONIUM hortorum	COMMON GERANIUM	عبيرة
	SHRUBS TYPE 2	LAVANDULA angustifolia	LAVENDER	للفندر
	SHRUBS TYPE 3	LANTANA camara	COMMON LANTANA	لمر كاهور

PAVEMENT SCHEDULE

SHAPE	DESCRIPTION
	INTERLOCK TILES Type 1
	INTERLOCK TILES Type 2
	RUBBER PAVEMANT

SITE FURNIURE

SHAPE	DESCRIPTION
	CONCRETE BENCH
	SPONSOR BILLBOARD
	WASTE BIN
	CONCRETE TABLE & CONCRETE BENCHES
	WARNING BILLBOARD
	MEMORIAL PLAQUE

UNITED NATIONS DEVELOPMENT PROGRAMME

UNDP

PROJECT (NAME & NO.)
Establishment of Mini Playgrounds in Al Dair & Al Nashwah Sub-Districts, Majnoon Area of Basrah, Iraq

DESIGN GROUP: Architectural

Sheet no.

DRWG. TITLE: General Layout #2 of Playground #1_Al Dair

DRWG. STATUS: NOT APP. | APP. +COM | APPRVD

DRWG. NO.: T - 04

SCALE

DESIGN | DRAWN | CHECKED

T - 05 Google Earth Map_Playground #2_Al Dair

Google earth

feet 3000

km 1

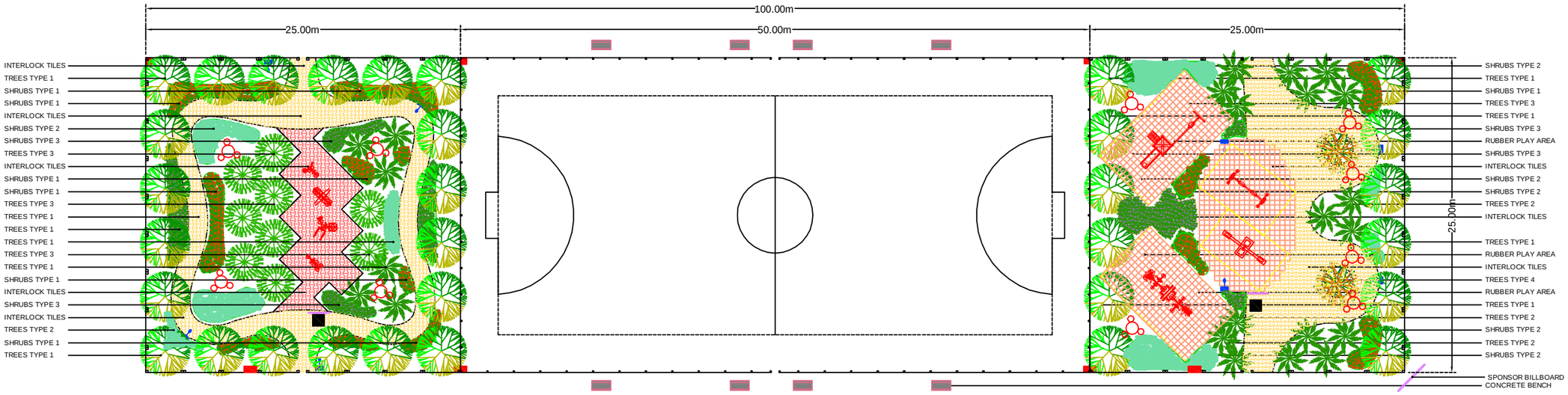

PLANTING SCHEDULE (TREES)

SHAPE	DESCRIPTION	SCIENTIFIC NAME	COMMON NAME	ARABIC NAME
	TREES TYPE 1	ACACIA cyanophylla	MOMOSA	اكاسيا مصرية
	TREES TYPE 2	PHOENIX dactilifera	DATE PALM	نخيل
	TREES TYPE 3	CONOCARPUS lancifolius	QALAB	دسي سخاني
	TREES TYPE 4	ALBIZA julibrissin	SILK TREE	البيزيا

PLANTING SCHEDULE (SHRUBS)

SHAPE	DESCRIPTION	SCIENTIFIC NAME	COMMON NAME	ARABIC NAME
	SHRUBS TYPE 1	PELARGONIUM hortorum	COMMON GERANIUM	جيرنيوم
	SHRUBS TYPE 2	LAVANDULA angustifolia	LAVENDER	لافندر
	SHRUBS TYPE 3	LANTANA camara	COMMON LANTANA	لمر خاشير

PAVEMENT SCHEDULE

SHAPE	DESCRIPTION
	INTERLOCK TILES Type 1
	INTERLOCK TILES Type 2
	RUBBER PAVEMANT

SITE FURNIURE

SHAPE	DESCRIPTION
	CONCRETE BENCH
	SPONSOR BILLBOARD
	WASTE BIN
	CONCRETE TABLE & CONCRETE BENCHES
	WARNING BILLBOARD
	MEMORIAL PLAQUE

UNITED NATIONS DEVELOPMENT PROGRAMME

PROJECT (NAME & NO.)
Establishment of Mini Playgrounds in Al Dair & Al Nashwah Sub-Districts, Majnoon Area of Basrah, Iraq

DESIGN GROUP: Architectural

Sheet no.

DRWG. TITLE: General Layout #1 of Playground #2_Al Dair

DRWG. STATUS: NOT APP. | APP. COM. | APPRVD

DRWG. NO.: T - 06

SCALE

DESIGN | DRAWN | CHECKED

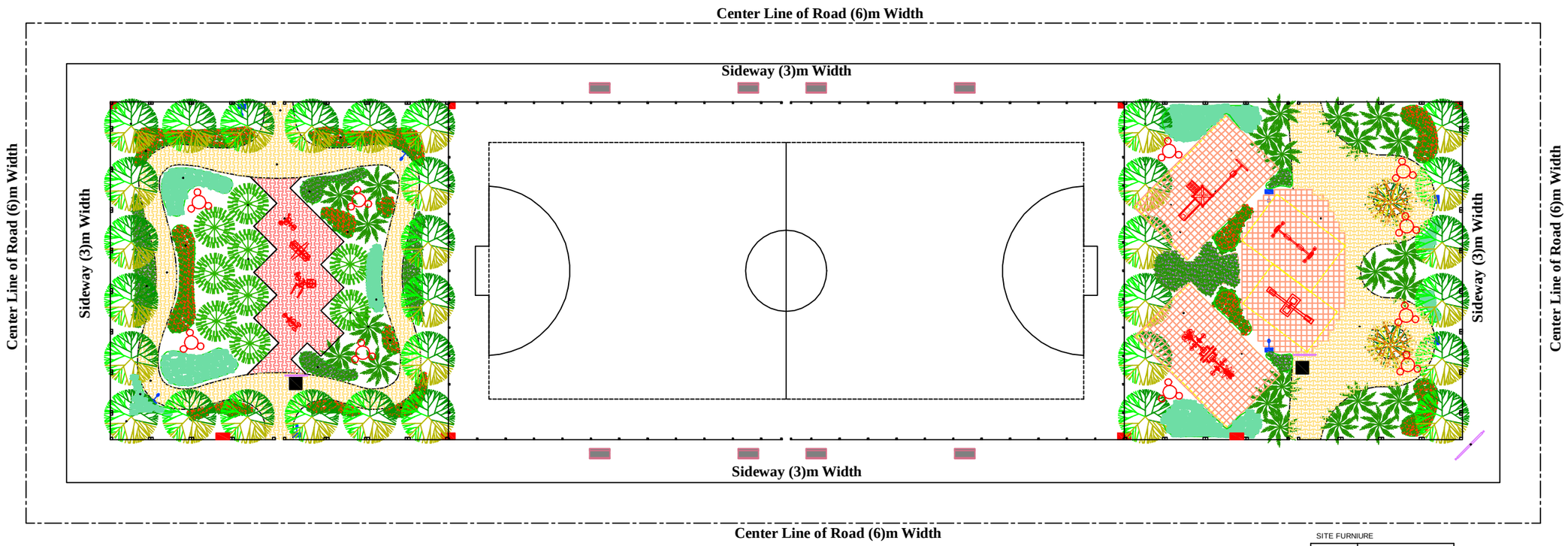

PLANTING SCHEDULE (TREES)

SHAPE	DESCRIPTION	SCIENTIFIC NAME	COMMON NAME	ARABIC NAME
	TREES TYPE 1	ACACIA cyanophylla	MOMOSA	اغاسيا مسرية
	TREES TYPE 2	PHOENIX dactilifera	DATE PALM	نخيل
	TREES TYPE 3	CONOCARPUS lancifolius	QALAB	قنس سخلي
	TREES TYPE 4	ALBIZA julibrissin	SILK TREE	البيزيا

PLANTING SCHEDULE (SHRUBS)

SHAPE	DESCRIPTION	SCIENTIFIC NAME	COMMON NAME	ARABIC NAME
	SHRUBS TYPE 1	PELARGONIUM hortorum	COMMON GERANIUM	جيرنيوم
	SHRUBS TYPE 2	LAVANDULA angustifolia	LAVENDER	اللافندر
	SHRUBS TYPE 3	LANTANA camara	COMMON LANTANA	لانتانا

PAVEMENT SCHEDULE

SHAPE	DESCRIPTION
	INTERLOCK TILES Type 1
	INTERLOCK TILES Type 2
	RUBBER PAVEMANT

SITE FURNIURE

SHAPE	DESCRIPTION
	CONCRETE BENCH
	SPONSOR BILLBOARD
	WASTE BIN
	CONCRETE TABLE & CONCRETE BENCHES
	WARNING BILLBOARD
	MEMORIAL PLAQUE

UNITED NATIONS DEVELOPMENT PROGRAMME

PROJECT (NAME & NO)
Establishment of Mini Playgrounds in Al Dair & Al Nashwah Sub-Districts, Majnoon Area of Basrah, Iraq

DESIGN GROUP: Architectural

Sheet no.

DWG. TITLE: General Layout #2 of Playground #2_Al Dair

DWG. STATUS

MAP APP. | APP.-CORM | APP.BWD

DWG. NO.: T - 07

SCALE

DESIGN | DRAWN | CHECKED

T - 08 Google Earth Map_Playgrounds #1 & 2_Al Nashwah

Google earth

miles 4

km 7

T - 09 Google Earth Map Playground #1_Al Nashwah

Google earth

miles 1

km 1

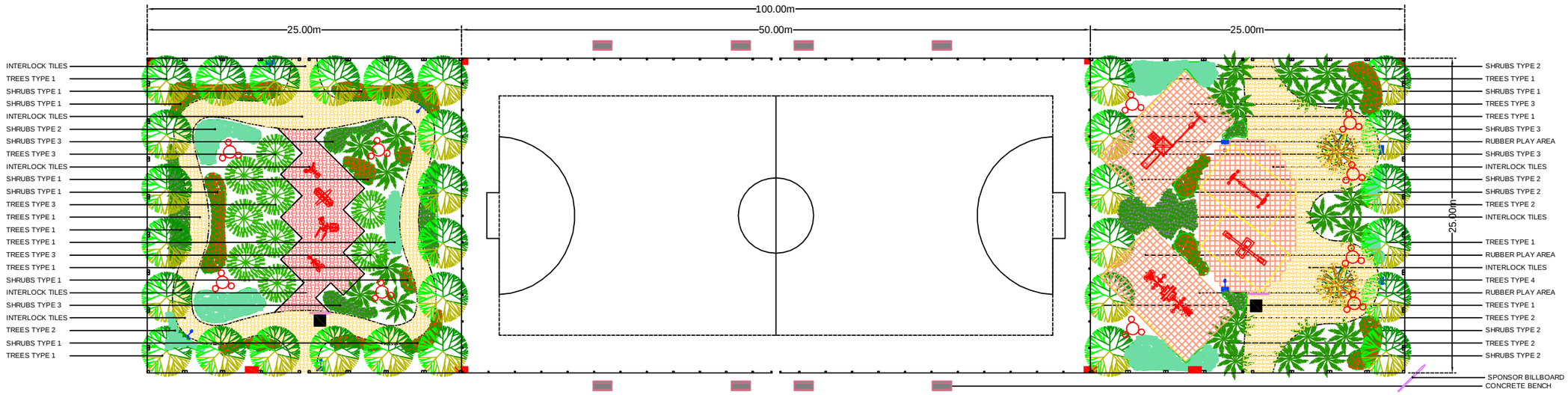

UNITED NATIONS DEVELOPMENT PROGRAMME

PROJECT (NAME & NO.)
Establishment of Mini Playgrounds in Al Dair & Al Nashwah Sub-Districts, Majnoon Area of Basrah, Iraq

DESIGN GROUP
Architectural

Sheet no.

DRWG. TITLE
General Layout #1 of Playground #1_Al Nashwah

DRWG. STATUS
NOT APP. | APP.+COM | APPRVD

DRWG. NO.
T - 10

SCALE

DESIGN | DRAWN | CHECKED

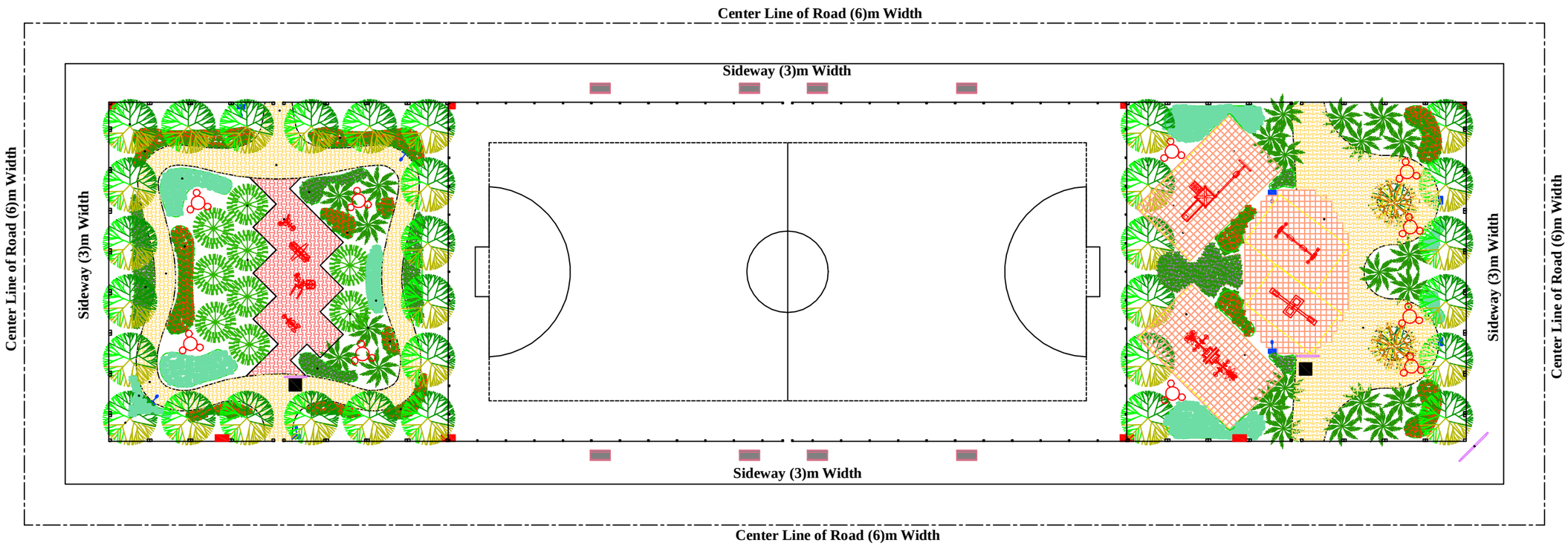

UNITED NATIONS DEVELOPMENT PROGRAMME

PROJECT (NAME & NO.)
Establishment of Mini Playgrounds in Al Dair & Al Nashwah Sub-Districts, Majnoon Area of Basrah, Iraq

DESIGN GROUP: Architectural

Sheet no.

DRWG. TITLE: General Layout #2 of Playground #1_Al Nashwah

DRWG. STATUS

SUB-APP. | APP.-CLIM | APPROVD

DRWG. NO.: T - 11

SCALE

DESIGN | DRAWN | CHECKED

T - 12 Google Earth Map_Playground #2_Al Nashwah

Google earth

feet 3000

km 1

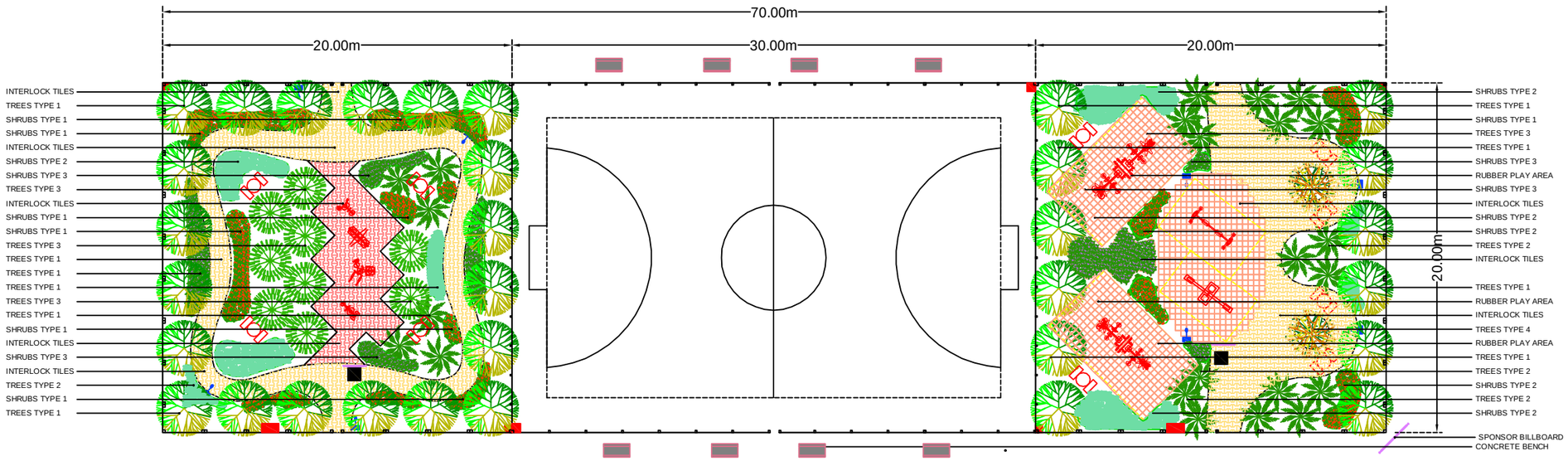

UNITED NATIONS DEVELOPMENT PROGRAMME

PROJECT (NAME & NO.)
Establishment of Mini Playgrounds in Al Dair & Al Nashwah Sub-Districts, Majnoon Area of Basrah, Iraq

DESIGN GROUP
Architectural

Sheet no.

DRWG. TITLE
General Layout #1 of Playground #2_Al Nashwah

DRWG. STATUS

NOT APP.	APP.+COM	APPRVD

DRWG. NO.
T - 13

SCALE

DESIGN	DRAWN	CHECKED

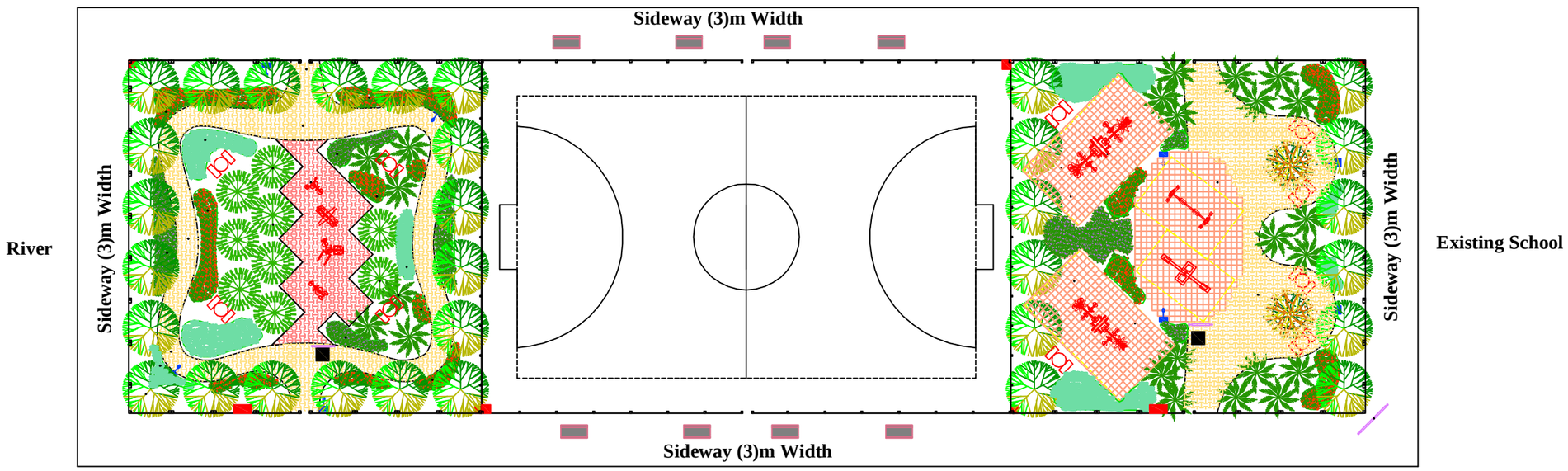

UNITED NATIONS DEVELOPMENT PROGRAMME

PROJECT (NAME & NO.)
Establishment of Mini Playgrounds in Al Dair & Al Nashwah Sub-Districts, Majnoon Area of Basrah, Iraq

DESIGN GROUP
Architectural

Sheet no.

DRWG. TITLE
General Layout #2 of Playground #2_Al Nashwah

DRWG. STATUS
NOT APP. | APP.+COM | APPRVD

DRWG. NO.
T - 14

SCALE

DESIGN | DRAWN | CHECKED

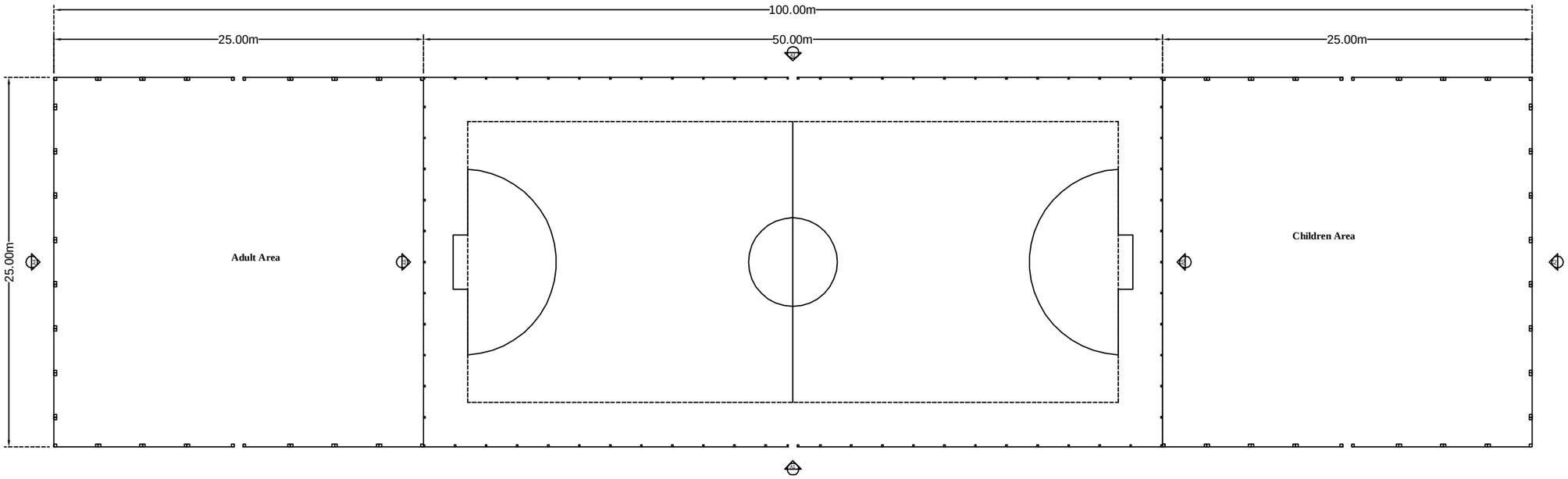

UNITED NATIONS DEVELOPMENT PROGRAMME

PROJECT (NAME & NO.)
Establishment of Mini Playgrounds in Al Dair & Al Nashwah Sub-Districts, Majnoon Area of Basrah, Iraq

DESIGN GROUP: Architectural

Sheet no.

DRWG. TITLE: Typical Elevations Plan Layout

DRWG. STATUS: NOT APP. | APP.=COM | APPRVD

DRWG. NO.: T - 15

SCALE

DESIGN | DRAWN | CHECKED

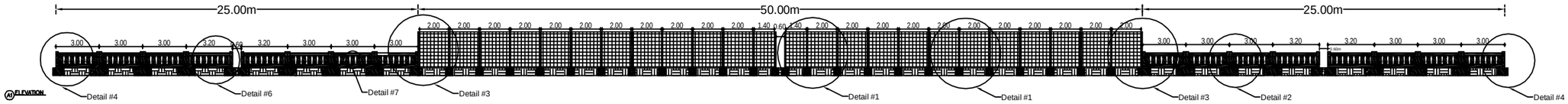

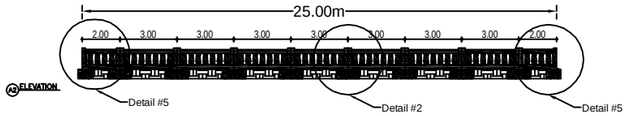

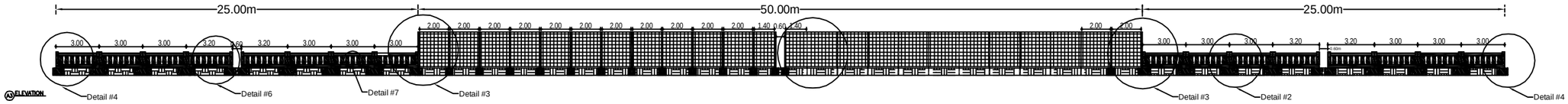

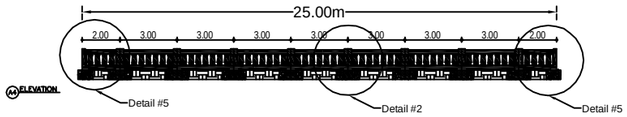

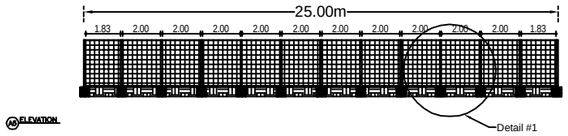

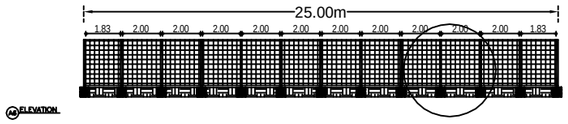

UNITED NATIONS DEVELOPMENT PROGRAMME

PROJECT (NAME & NO.)
Establishment of Mini Playgrounds in Al Dair & Al Nashwah Sub-Districts, Majnoon Area of Basrah, Iraq

DESIGN GROUP: **Architectural**

Sheet no.

DRWG. TITLE: Typical Elevations Layout

DRWG. STATUS: NOT APP. | APP. +COM | APPRVD

DRWG. NO.: T - 16

SCALE

DESIGN | DRAWN | CHECKED

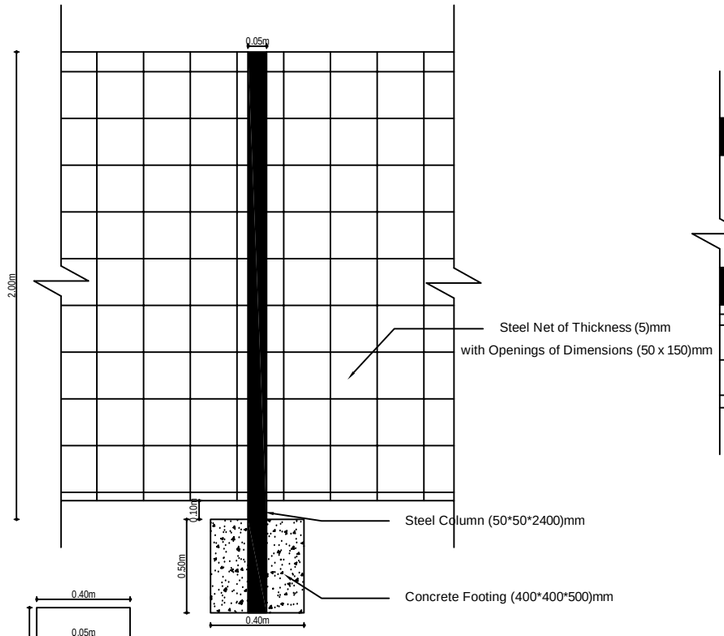

Detail #1

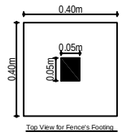

Top View for Fence's Footing

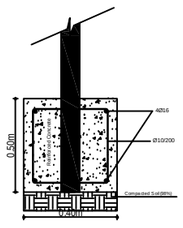

Cross Section in Fence's Footing

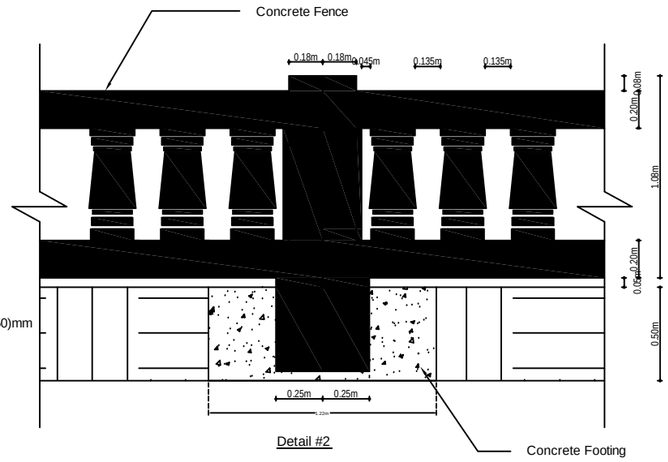

Detail #2

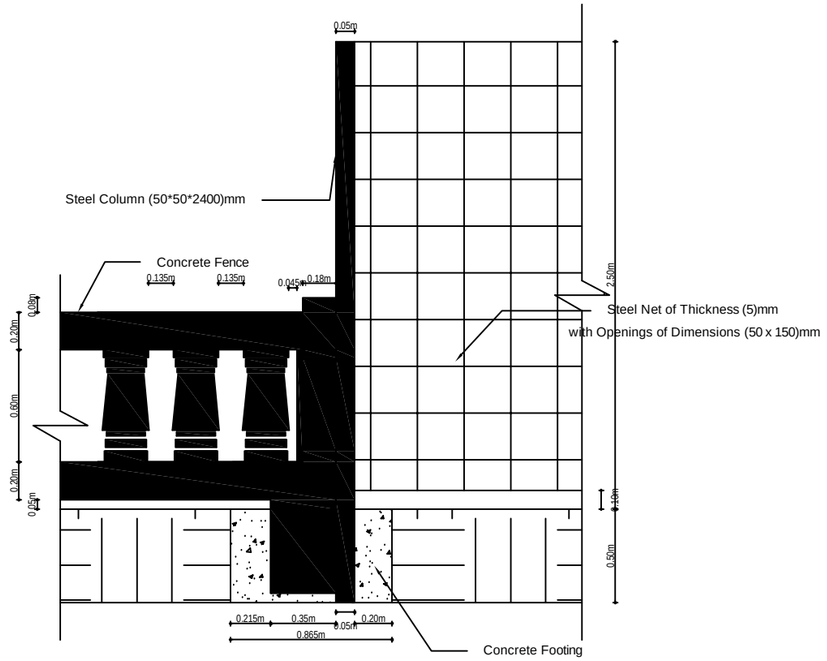

Detail #3

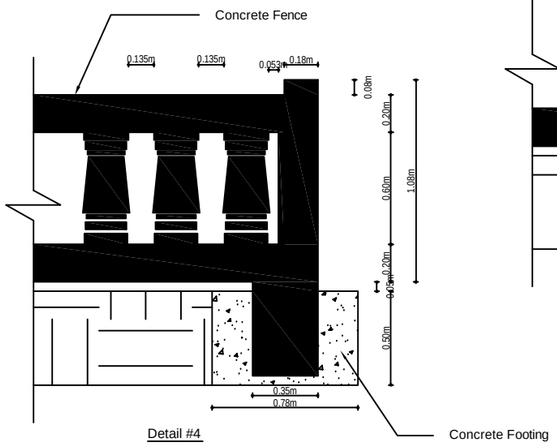

Detail #4

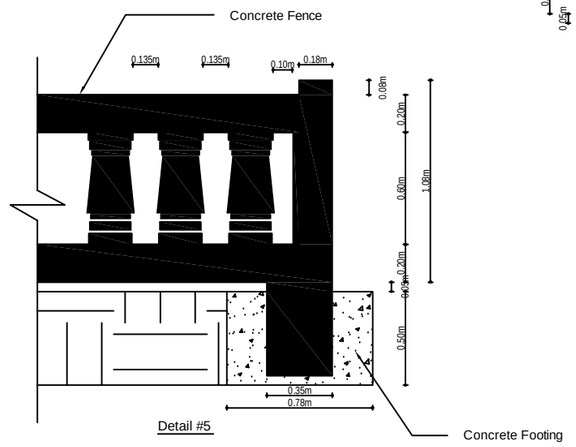

Detail #5

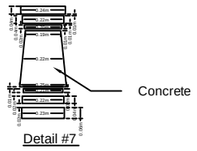

Detail #7

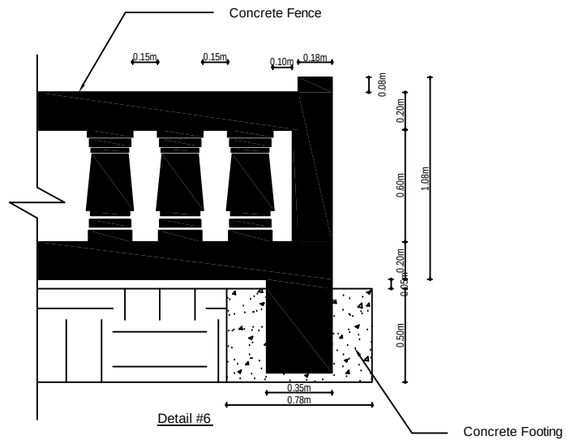

Detail #6

Notes

1. The steel columns section is of dimensions (50x50) & of thickness (1.5)mm.
2. The steel net is of diameter (5mm) and openings of dimensions (50*150)mm.
3. All the used steel for the fence must be high tension, galvanized & thermal painted.
4. The part of the steel coloumn inside the concrete footing must be painted with epoxy few minutes before putting it into concrete.

Notes

1. Type V sulphate-resisting cement must be used in all concrete works that will be in contact with the soil.
2. Minimum cement content is 380 kg/m³.
3. Maximum free water / cement ratio is 0.45 by weight.
4. Minimum yield stress of reinforcing bars =420MPa.
5. Minimum concrete cover for footing =50mm.
6. If the length of reinforcing bars is not enough, then the minimum overlap splices = 50 times the bar.
7. The hock of the stirrups must be with angle (45) degree.
8. Three layers of asphaltic material at the base and sides of the concrete footing.
9. Enough curing must be applied to the blinding concrete and footing.
10. The dimensions of the reinforced concrete foundations are of the fence (400mm length * 400mm width * 500mm depth).
11. The part of the concrete column the concrete footing must be covered with epoxy just few minutes before casting the concrete.
12. The whole footings of the fence will be below the finish level of the area's surface.
13. The playground and fitness equipment will be installed as per the manufacturer instructions and technical specifications of the equipment.
14. For footings, concrete columns & concrete fence, the minimum compressive cubic strength of concrete is (25 MPa).
15. The finish level of the footing will be the same finish level of the surrounding area.
16. After installing the concrete footings, the surrounding areas of the footings must be returned to its original status before starting the footings works.

UNITED NATIONS DEVELOPMENT PROGRAMME

PROJECT (NAME & NO.)
Establishment of Mini Playgrounds in Al Dair & Al Nashwah Sub-Districts, Majnoon Area of Basrah, Iraq

DESIGN GROUP: **Architectural**

Sheet no.

DRWG. TITLE: Typical Elevations Details Layout

DRWG. STATUS

NOT APP. | APP. =CEM | APPRVD

DRWG. NO.: T - 17

SCALE

DESIGN | DRAWN | CHECKED

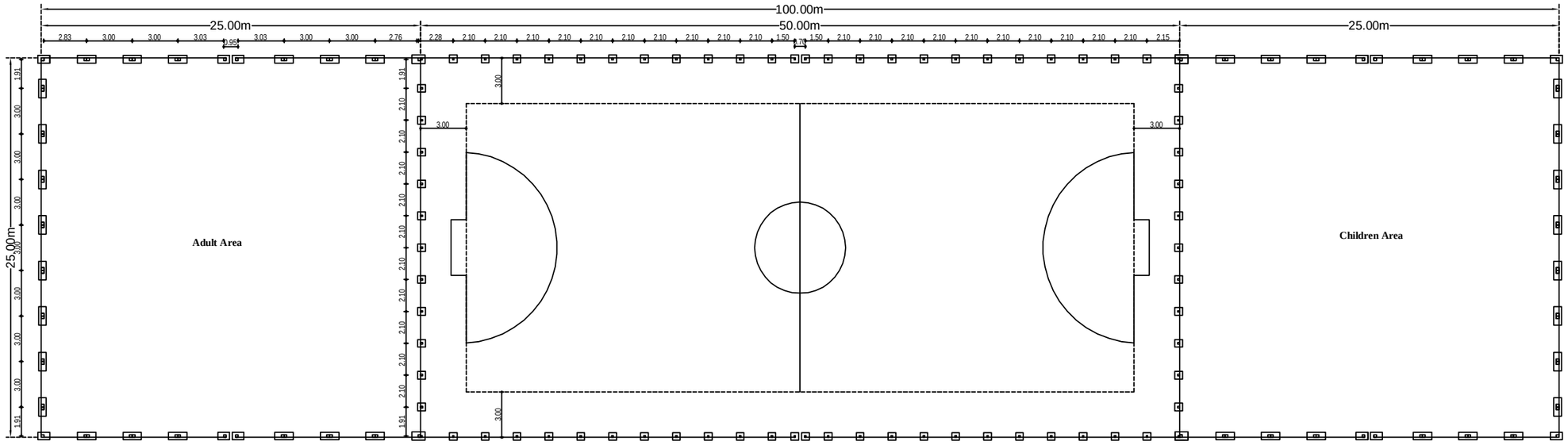

UNITED NATIONS DEVELOPMENT PROGRAMME

PROJECT (NAME & NO.)
Establishment of Mini Playgrounds in Al Dair & Al Nashwah Sub-Districts, Majnoon Area of Basrah, Iraq

DESIGN GROUP
Architectural

Sheet no.

DRWG. TITLE
Typical Fence's Footing Plan Layout

DRWG. STATUS
NOT APP. | APP.+COM | APPRVD

DRWG. NO.
T - 18

SCALE

DESIGN | DRAWN | CHECKED

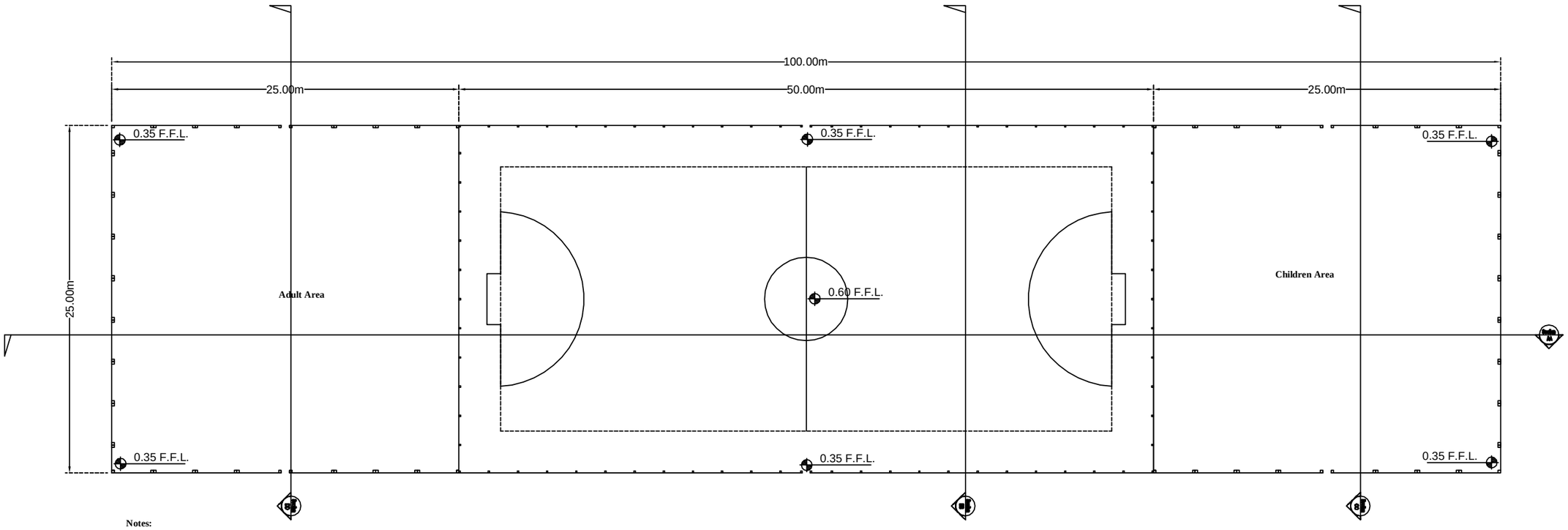

Notes:

1) The 0.00 F.F.L. at the borders equals the finish level (asphalt level) of the surrounding streets plus (350)mm.

2) The used slope is (0.5%) in long direction and (2%) in short direction starting from the middle of the football court.

UNITED NATIONS DEVELOPMENT PROGRAMME

PROJECT (NAME & NO.)
Establishment of Mini Playgrounds in Al Dair & Al Nashwah Sub-Districts, Majnoon Area of Basrah, Iraq

DESIGN GROUP: **Architectural**

Sheet no.

DRWG. TITLE: Typical Floor Finish Level Plan Layout

DRWG. STATUS: NOT APP. | APP. +COM | APPRVD

DRWG. NO.: T - 19

SCALE

DESIGN | DRAWN | CHECKED

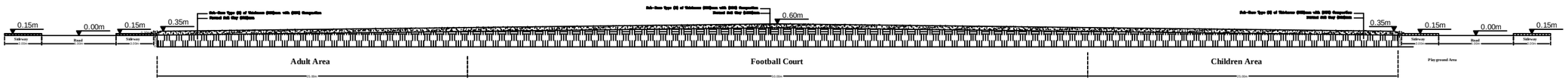

Section AA

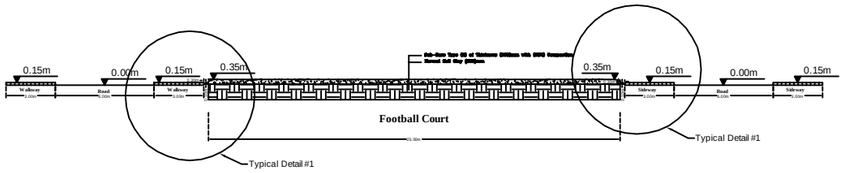

Section BB

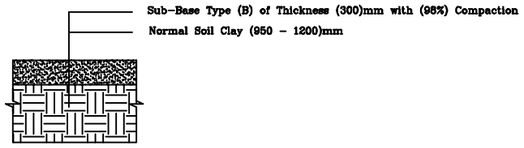

Cross Section in Football Court Floor

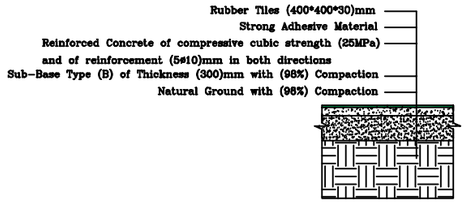

Cross Section in Rubber Tiles Floor

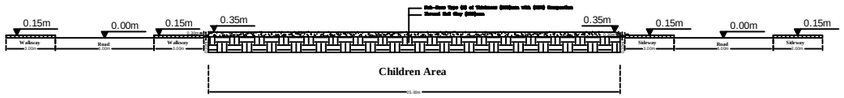

Section CC

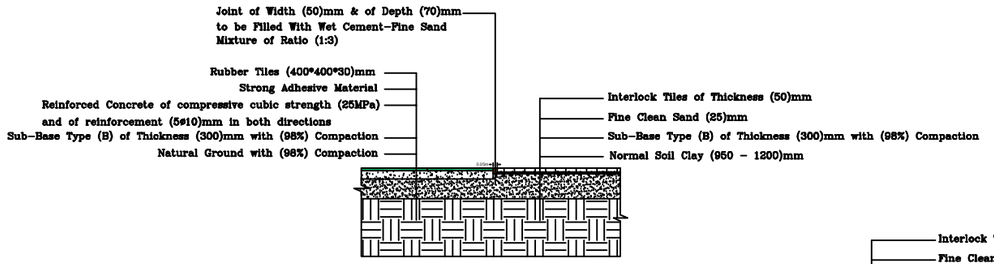

Cross Section in Connection Between Rubber Floor Tiles & Interlock Floor Tiles

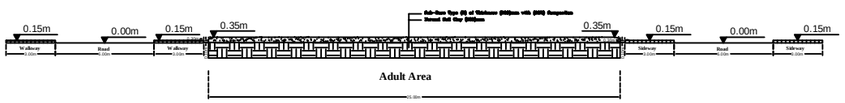

Section DD

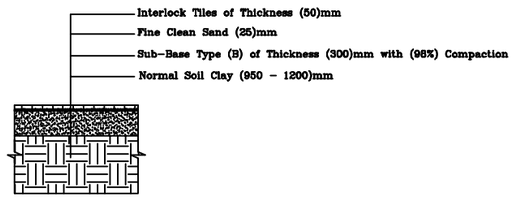

Cross Section in Interlock Tiles Floor

Typical Detail #1

UNITED NATIONS DEVELOPMENT PROGRAMME

PROJECT (NAME & NO.)
Establishment of Mini Playgrounds in Al Dair & Al Nashwah Sub-Districts, Majnoon Area of Basrah, Iraq

DESIGN GROUP: Architectural

Sheet no.

DRWG. TITLE: Typical Floor Cross Sections & Details Layout

DRWG. STATUS: INIT APP. | APP.+COM | APPROV

DRWG. NO.: T - 20

SCALE

DESIGN | DRAWN | CHECKED

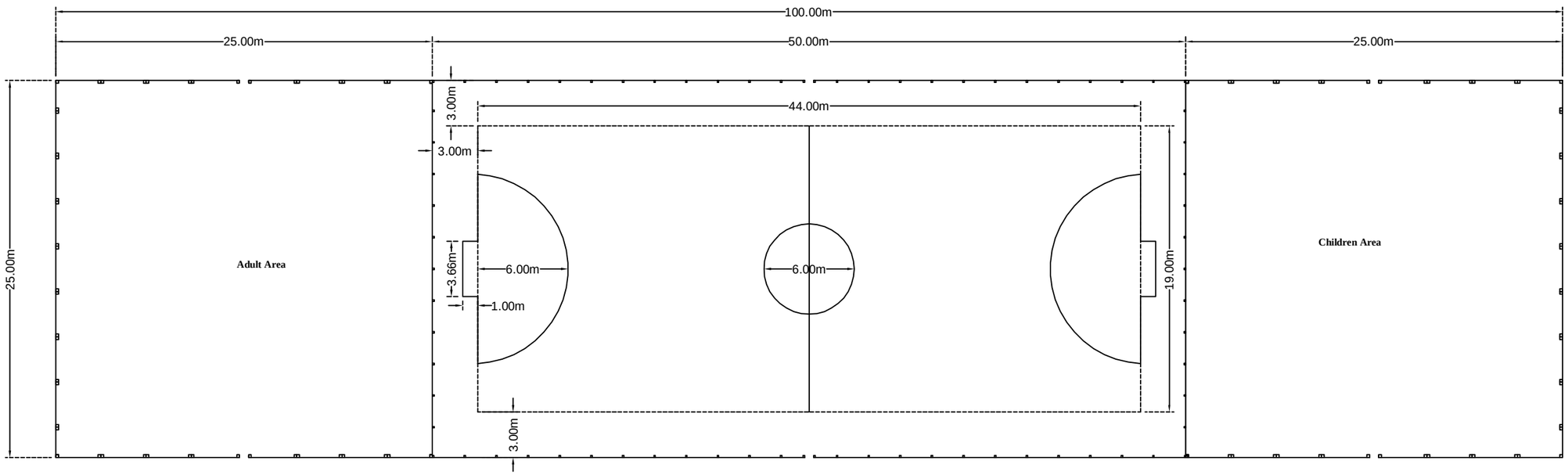

Notes:

1) Width of the lines of football court is (100)mm.

2) The lines of the football court will be implemented by using fine white sand mixed with chalk.

UNITED NATIONS DEVELOPMENT PROGRAMME

PROJECT (NAME & NO.)
Establishment of Mini Playgrounds in Al Dair & Al Nashwah Sub-Districts, Majnoon Area of Basrah, Iraq

DESIGN GROUP
Architectural

Sheet no.

DRWG. TITLE
Typical Mini Football Court's Markings Layout

DRWG. STATUS
NOT APP. | APP. +COM | APPRVD

DRWG. NO.
T - 21

SCALE

DESIGN | DRAWN | CHECKED

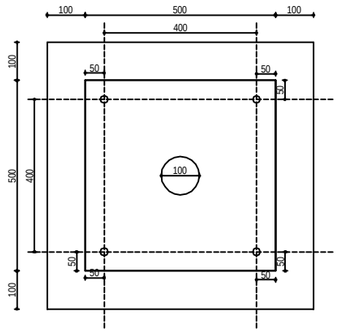

Plan for Reinforced Foundation with Steel Plate

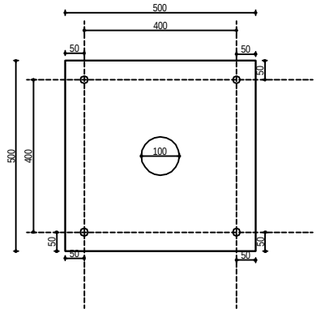

Plan for Steel Plate

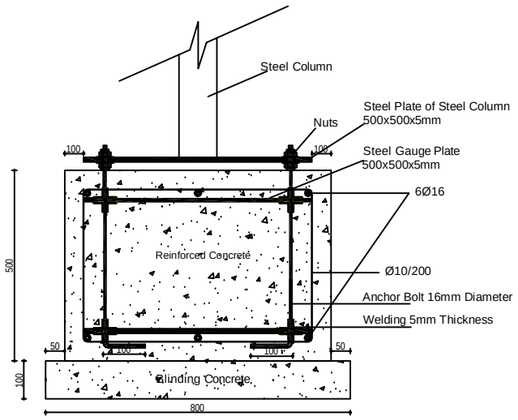

Cross Section for Foundation

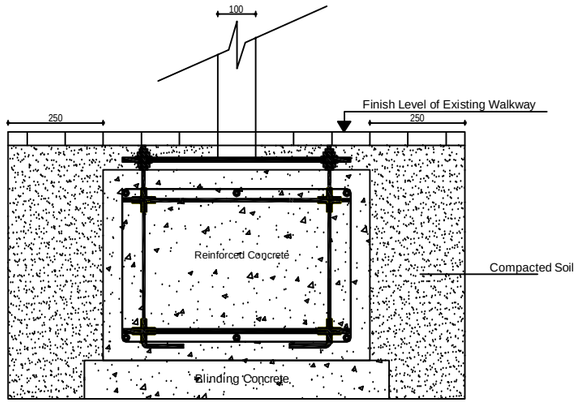

Cross Section Walkway for Memorial Plaque

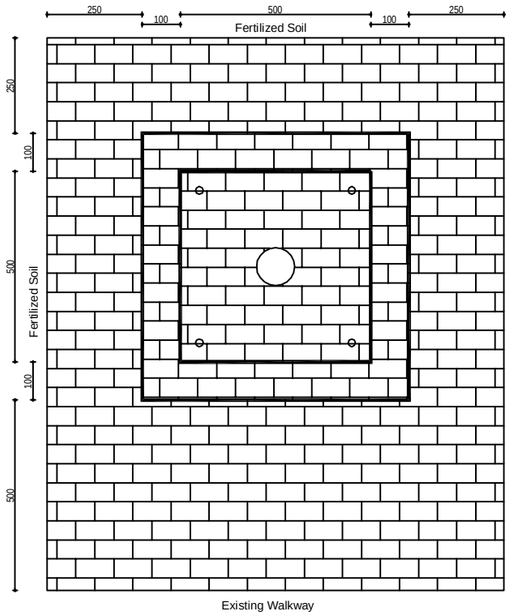

Plan of Walkway for Memorial Plaque

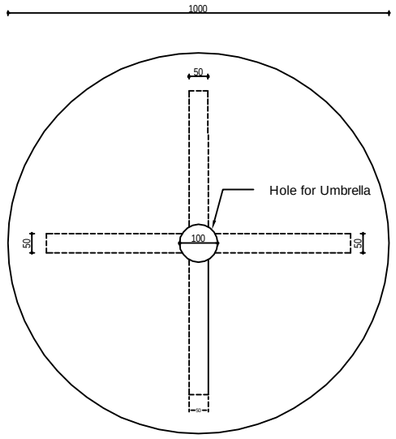

Top View of Concrete Table

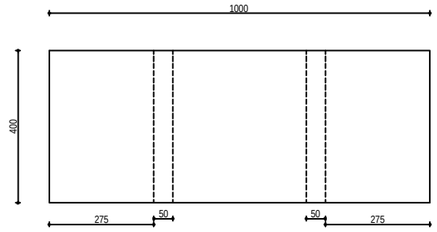

Top View of Concrete Bench

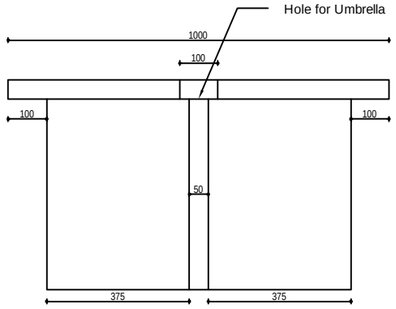

Side View of Concrete Table

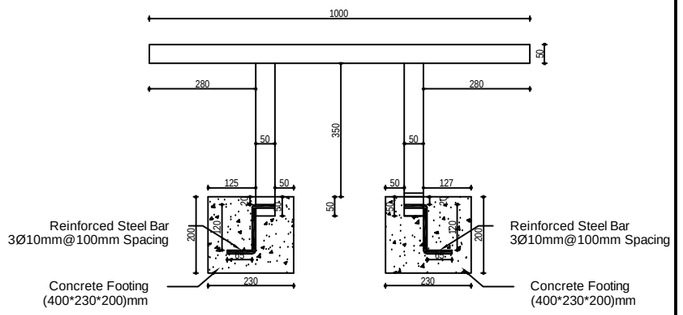

Side View of Concrete Bench

Notes

1. Type V sulphate-resisting cement must be used in all concrete works that will be in contact with the soil.
2. Minimum cement content is 380 kg/m³.
3. Maximum free water / cement ratio is 0.45 by weight.
4. Minimum compressive cubic strength for concrete = 25MPa and for blinding concrete = 15 MPa.
5. Minimum yield stress of reinforcing bars =420MPa.
6. Minimum concrete cover for footing =50mm.
7. If the length of reinforcing bars is not enough, then the minimum overlap splices = 50 times the bar.
8. The steel plate, anchor bolts & nuts must be galvanized and high tension.
9. The number, diameter & distribution of bolts depends on the must be suitable to the equipment's bolts.
10. The hock of the stirrups must be with angle (45) degree.
11. Three layers of asphaltic material at the base and sides of the blinding concrete and footing.
12. Enough curing must be applied to the blinding concrete and footing.
13. The dimensions of the reinforced concrete foundations of the memorial plaque are (700mm length * 700mm width * 500mm depth).
14. All dimensions are in mm.
15. The Height of the anchor bolts must have (100mm) above reinforced concrete finish level, then its height will be adjusted after putting the nuts.
16. The part of the anchor bolts inside the concrete must be covered with epoxy just few minutes before casting the concrete.
17. Curbstone similar to the existing one will be used for the walkway.
18. Walkway will be constructed same as the existing one.
19. High welding quality (5mm) thickness and (50mm) length in each direction must be done for all connections from all sides between the gauge plates and the anchor bolts.

UNITED NATIONS DEVELOPMENT PROGRAMME

PROJECT (NAME & NO.)
Establishment of Mini Playgrounds in Al Dair & Al Nashwah Sub-Districts, Majnoon Area of Basrah, Iraq

DESIGN GROUP
Architectural

Sheet no.

DRWG. TITLE
Typical Structural Details #1 Layout Memorial Plaque, Concrete Tables & Concrete Benches

DRWG. STATUS
NOT APP. | APP. +COM | APPRVD

DRWG. NO.
T - 22

SCALE

DESIGN | DRAWN | CHECKED

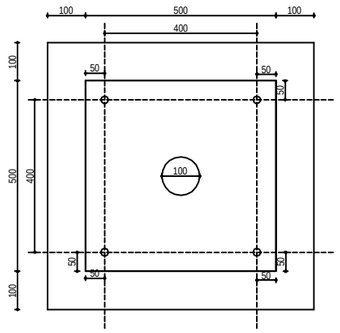

Plan for Reinforced Foundation with Steel Plate

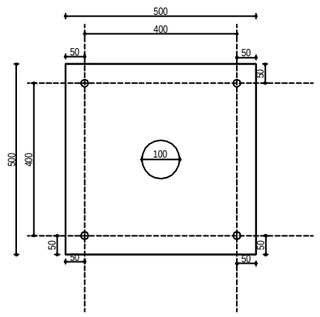

Plan for Steel Plate

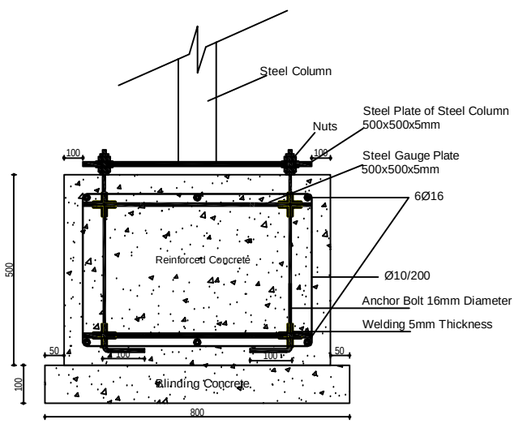

Cross Section for Foundation

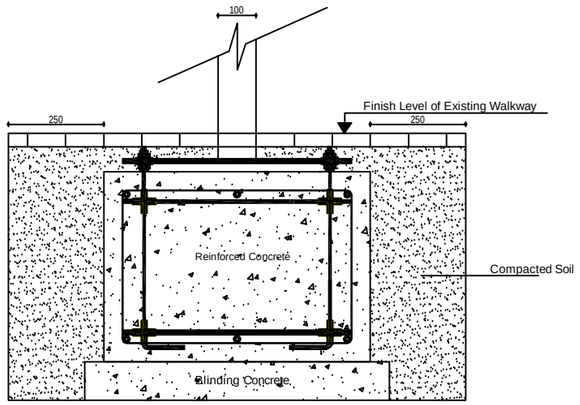

Cross Section Walkway

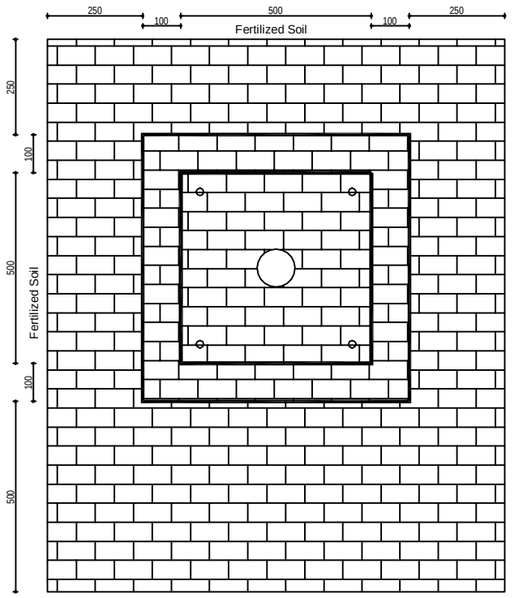

Plan of Walkway

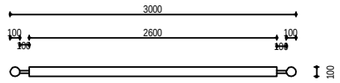

SPONSOR BILLBOARD IN PLAN

WARNING BILLBOARD IN PLAN

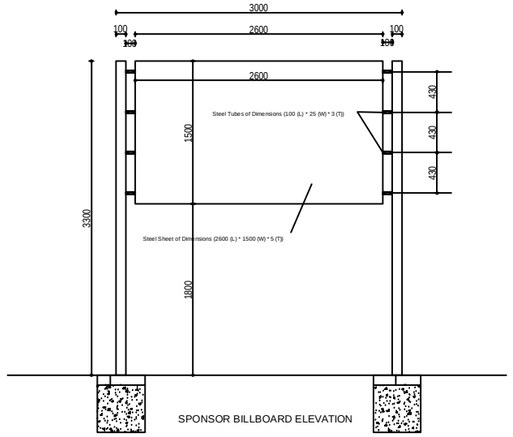

SPONSOR BILLBOARD ELEVATION

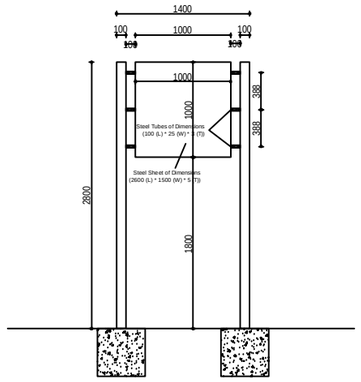

WARNING BOARD

Notes

1. Type V sulphate-resisting cement must be used in all concrete works that will be
2. Minimum cement content is 380 kg/m³.
3. Maximum free water / cement ratio is 0.45 by weight.
4. Minimum compressive cubic strength for concrete = 25MPa and for blinding concrete = 15 MPa.
5. Minimum yield stress of reinforcing bars =420MPa.
6. Minimum concrete cover for footing =50mm.
7. If the length of reinforcing bars is not enough, then the minimum overlap splices = 50 times the bar.
8. The steel plate, anchor bolts & nuts must be galvanized and high tension.
9. The number, diameter & distribution of bolts depends on the must be suitable to the equipment's bolts.
10. The hock of the stirrups must be with angle (45) degree.
11. Three layers of asphaltic material at the base and sides of the blinding concrete and footing.
12. Enough curing must be applied to the blinding concrete and footing.
13. The dimensions of the reinforced concrete foundations are (700mm length * 700mm width * 500mm depth).
14. All dimensions are in mm.
15. The Height of the anchor bolts must have (100mm) above reinforced concrete finish level, then its height will be adjusted after putting the nuts.
16. The part of the anchor bolts inside the concrete must be covered with epoxy just few minutes before casting the concrete.
17. High welding quality (5mm) thickness and (50mm) length in each direction must be done for all connections from all sides between the gauge plates and the anchor bolts.
18. High welding quality (5mm) thickness in all each direction must be done from all sides between the steel tubes connections, the steel frame and the steel sheet of the board.
19. Three layers of paint must be applied to the steel, first layer is anti-corrosion paint, the second and third layers are from the final paint finish which must be external type.
20. Curbstone similar to the existing one will be used for the walkway.
21. Walkway will be constructed same as the existing one.

UNITED NATIONS DEVELOPMENT PROGRAMME

PROJECT (NAME & NO.)
Establishment of Mini Playgrounds in Al Dair & Al Nashwah Sub-Districts, Majnoon Area of Basrah, Iraq

DESIGN GROUP: **Architectural**

Sheet no.

DRWG. TITLE
Typical Structural Details #2 Layout
Sponsor Billboard & Warning Billboard

DRWG. STATUS
SUT AW | APP.-COM | APPRVD

DRWG. NO.
T - 23

SCALE

DESIGN | DRAWN | CHECKED

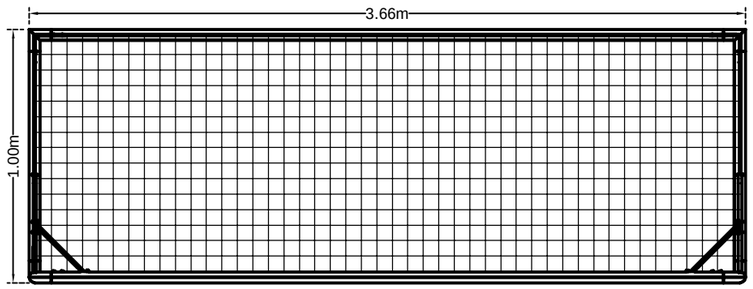

TOP
VIEW

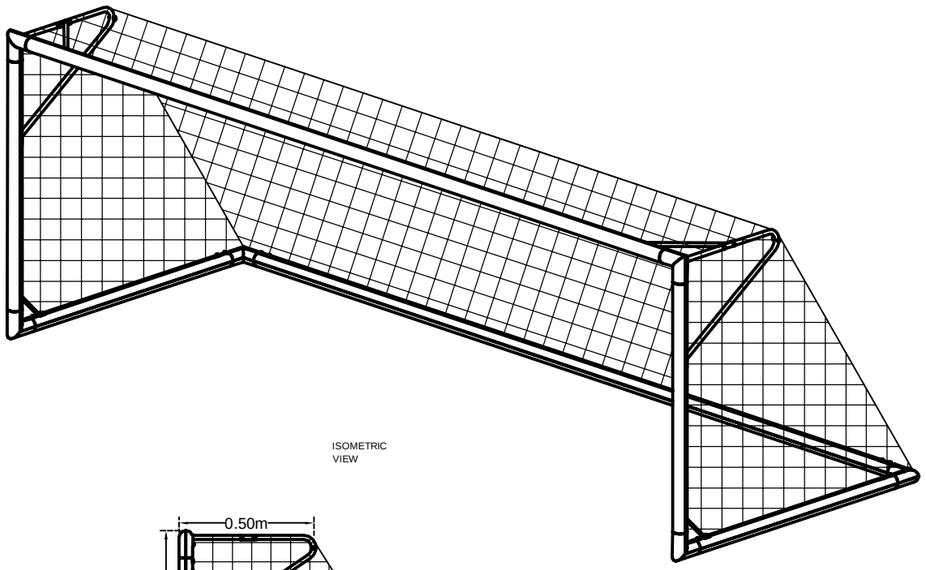

ISOMETRIC
VIEW

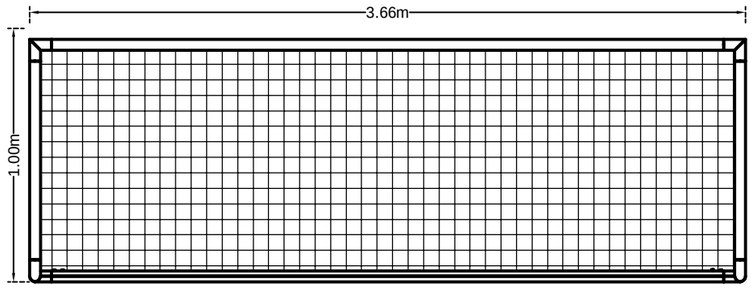

FRONT
VIEW

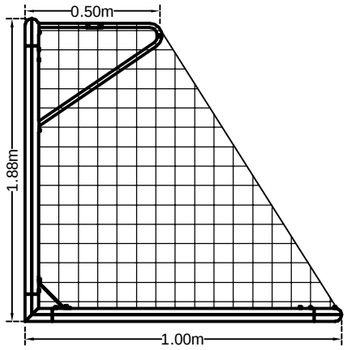

RIGHT
VIEW

Notes

1. Type V sulphate-resisting cement must be used in all concrete works that will be in contact with the soil.
2. Minimum cement contents 380 kg/m³.
3. Maximum free water / cement ratio is 0.45 by weight.
4. Minimum compressive cubic strength for cocrete = 25MPa and for blinding concrete = 15 MPa.
5. Minimum yield stress of reinforcing bars =420MPa.
6. Minimum concrete cover for footing =50mm.
7. If the length of reinforcing bars is not enough, then the minimum overlap splices = 50 times the bar.
8. The steel plate, anchor bolts & nuts must be galvanized and high tension.
9. The hock of the stirrups must be with angle (45) degree.
10. Three layers of asphaltic material at the base and sides of the blinding concrete and footing.
11. Enough curing must be applied to the blinding concrete and footing.
12. The dimensions of the reinforced concrete foundations are (500mm length * 500mm width * 500mm depth).
13. The Height of the anchor bolts must have (150mm) above reinforced concrete finish level, then its height will be adjusted after putting the nuts.
14. The part of the anchor bolts inside the concrete must be covered with epoxy just few minutes before casting the concrete.
15. High welding quality (5mm) thickness and (50mm) length in each direction must be done for all connections from all sides between the gauge plates, the anchor bolts and the steel pipes of the football goal.
16. A rubber cover will be used to cover the bolts and nuts to prevent injuries.
17. The steel pipes of the football goal is of diameter 100mm and thickness 5mm. These pipes must be painted three layers. First paint layer is anti corrosion paint, the second and third paint layers are of the final paint color. The used paint must be outdoor type and the method of painting must be thermal method.

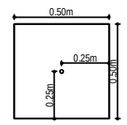

Plan for Reinforced Footing with Steel Anchor Bolt

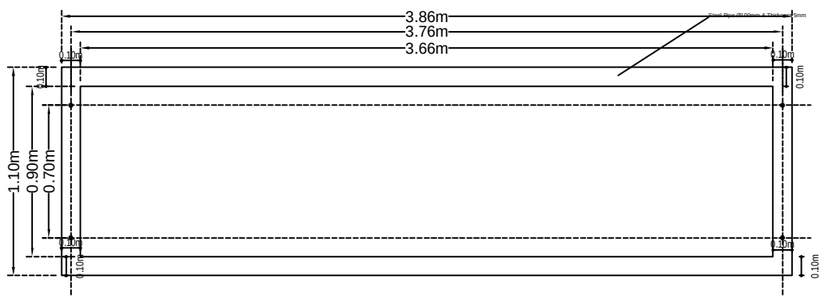

Plan for Steel Anchor Bolts

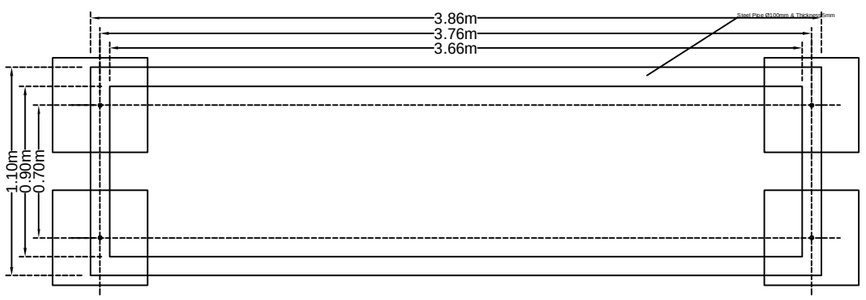

Plan for Reinforced Footings

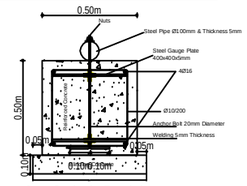

Cross Section for Foundation

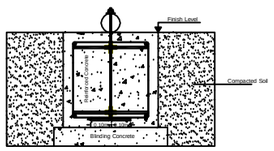

Cross Section for Foundation

UNITED NATIONS
DEVELOPMENT
PROGRAMME

PROJECT (NAME & NO.)
Establishment of Mini Playgrounds in Al Dair & Al Nashwah Sub-Districts, Majnoon Area of Basrah, Iraq

DESIGN GROUP
Architectural

Sheet no.

DRWG. TITLE
Typical Structural Details #3 Layout
Football Goal Details

DRWG. STATUS
NOT APP. | APP.+COM | APPRVD

DRWG. NO.
T - 24

SCALE

DESIGN | DRAWN | CHECKED

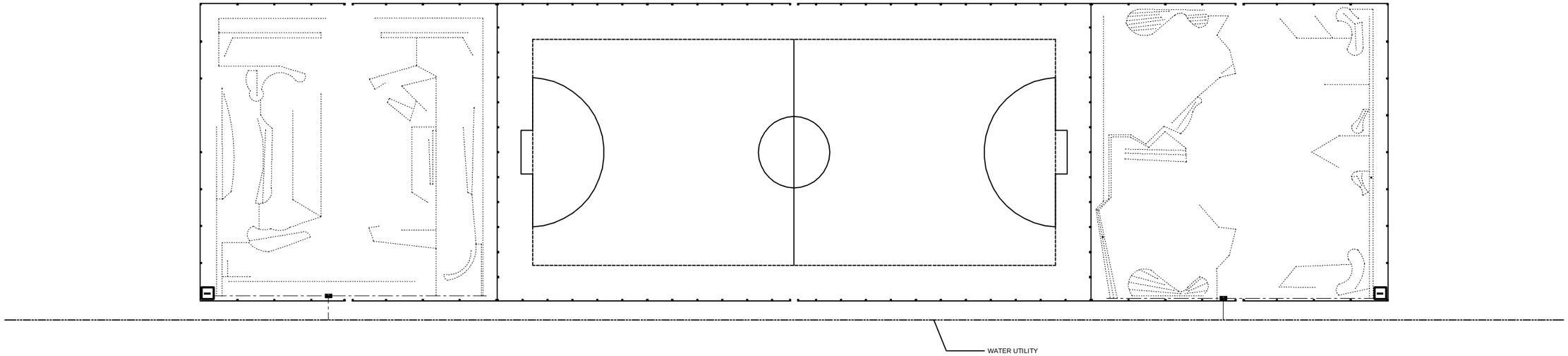

Irrigation Legend

Symbol	Item Description	Unit	Estimated Qty.
----------	P.E pipe 16mm	Meter	1300
—-—-—	P.E pipe 32mm	Meter	45
—-—-—-—	Water Utility	Meter	N/A
⧓	Drip soloneiod valve	No.	2
water tank	water tank	No.	2

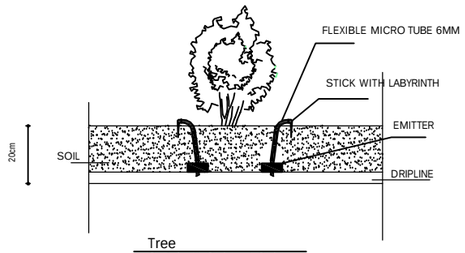

Tree
2 Drip X 8L/H=16L/H

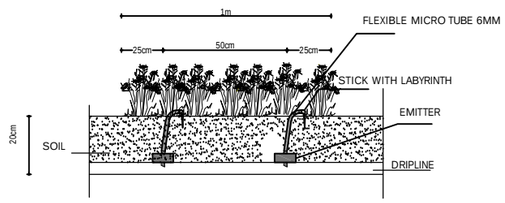

Shrub
1 Drip X 4L/H=4L/H EVERY 50CM

UNITED NATIONS DEVELOPMENT PROGRAMME

PROJECT (NAME & NO.)
Establishment of Mini Playgrounds in Al Dair & Al Nashwah Sub-Districts, Majnoon Area of Basrah, Iraq

DESIGN GROUP: Architecture3

Client no.

DRWG. TITLE: Typical Irrigation Plan & Details Layout

DRWG. STATUS: NOT APP. | APP.+COM | APPROVD

DRWG. NO.: T - 25

SCALE

DESIGN | DRAWN | CHECKED

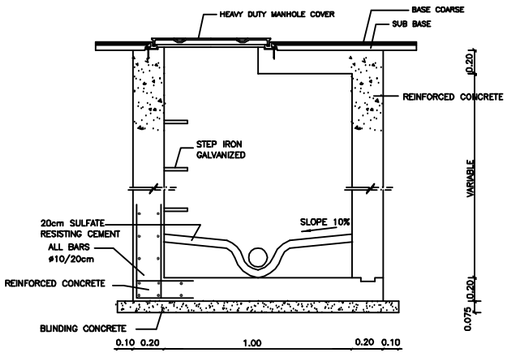

SECTION B–B

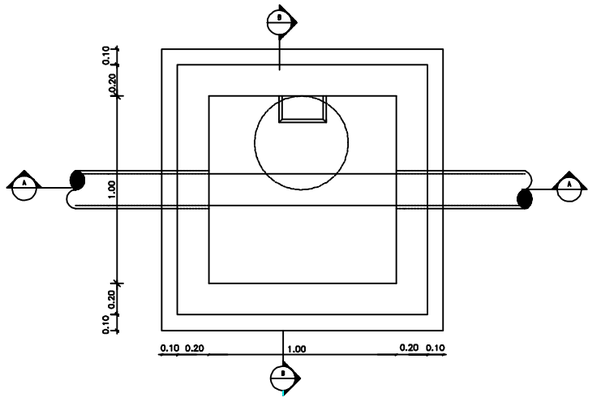

SEWAGE MANHOLE # 2 & 3 PLAN

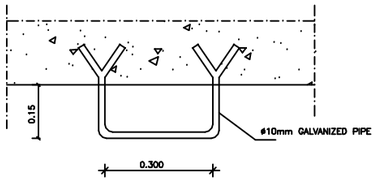

STEP DETAIL (B)

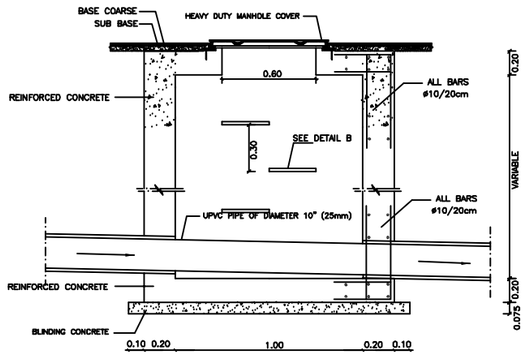

SECTION A–A

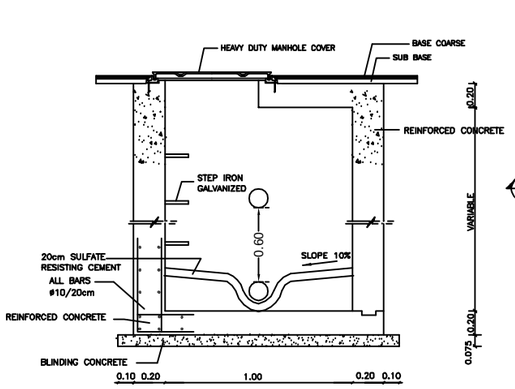

SECTION B–B

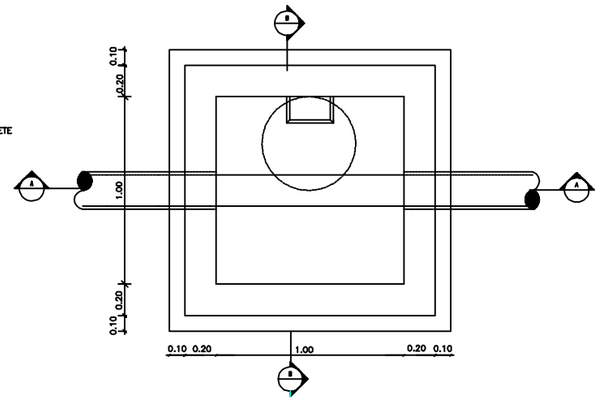

SEWAGE MANHOLE # 1 PLAN

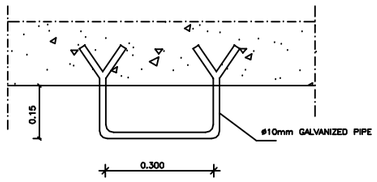

STEP DETAIL (B)

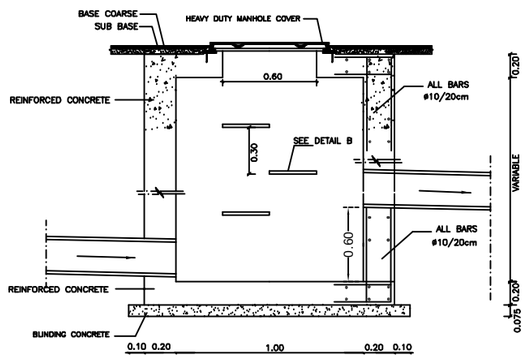

SECTION A–A

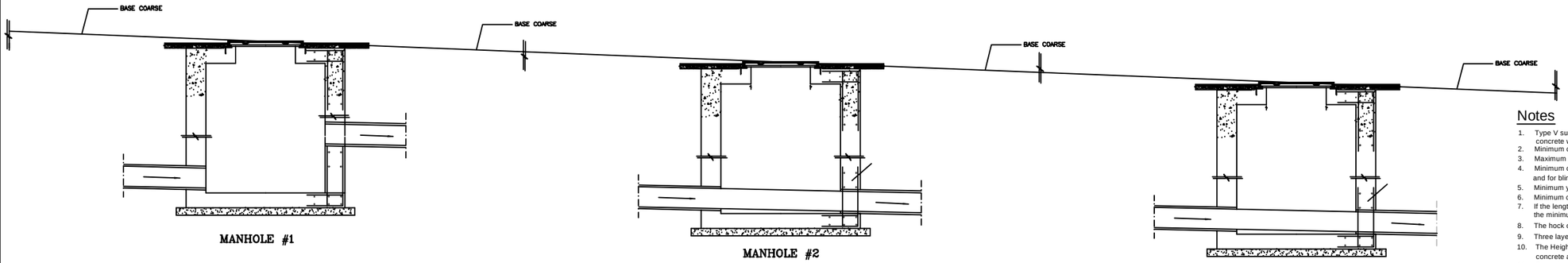

MANHOLE #1

MANHOLE #2

MANHOLE #3

PROPOSED SEWERAGE PIPELINE

Notes

1. Type V sulphate-resisting cement must be used in all concrete works that will be
2. Minimum cement content is 380 kg/m³.
3. Maximum free water / cement ratio is 0.45 by weight.
4. Minimum compressive cubic strength for cocrete = 25MPa and for blinding concrete = 15 MPa
5. Minimum yield stress of reinforcing bars =420MPa.
6. Minimum concrete cover for footing =50mm.
7. If the length of reinforcing bars is not enough, then the minimum overlap splices = 50 times the bar.
8. The hock of the stirrups must be with angle (45) degree.
9. Three layers of asphaltic material at the base and sides of the blinding
10. The Height of the anchor bolts must have (100mm) above reinforced concrete and footing.
11. Enough curing must be applied to the blinding concrete and footing.
12. All dimensions are in meter.
13. The minimum slope of the UPVC pipes is 1%.
14. The minimum level's difference between inlet and outlet is (5)cm.
15. If necessary, and according to the actual levels, inverse (Y) can be used in drop manholes provided that the drop not exceed (60)cm.
15. The embankment below the UPVC pipe must be two layers of thickness (20)cm of sub-base class (B) and compaction not less than (98%).
16. The route of the pipeline must be backfilled till the surrounding finish level.
17. Special warning tape must be installed at the middle depth of the backfilling layer over the pipeline route.

UNITED NATIONS DEVELOPMENT PROGRAMME

PROJECT (NAME & NO.)
Establishment of Mini Playgrounds in Al Dair & Al Nashwah Sub-Districts, Majnoon Area of Basrah, Iraq

DESIGN GROUP: Architectural

Sheet no.

DRWG. TITLE: Typical Sewerage Details

DRWG. STATUS: NOT APP. | APP.+COM. | APPROVD

DRWG. NO.: T - 26

SCALE

DESIGN | DRAWN | CHECKED

Legend:

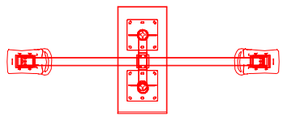
Seesaw

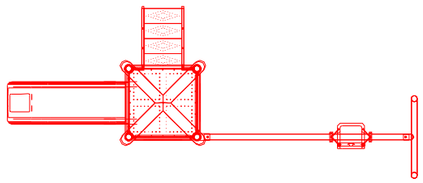
Play Tower (Slide & Swing)

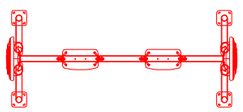
Traditional Classic Swing

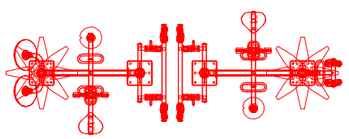
Mini Fitness Set for Children

Concrete Bench

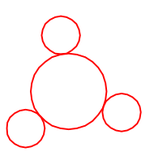
Concrete Table & Benches

Waist Stretching Equipment

Cycle & Step Equipment

Leg Pushing/Strengthening Equipment

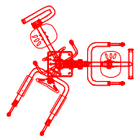
Body Building Equipment

Waste Bin

Sponsor Billboard

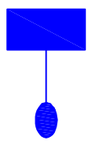
Solar Lighting Pole

Equipment Safety Zone

UNITED NATIONS DEVELOPMENT PROGRAMME

PROJECT (NAME & NO.)
Establishment of Mini Playgrounds in Al Dair & Al Nashwah Sub-Districts, Majnoon Area of Basrah, Iraq

DESIGN GROUP
Architectural

Sheet no.

DRWG. TITLE
Typical Equipment List

DRWG. STATUS

NOT APP.	APP.+COM	APPRVD

DRWG. NO.
T - 27

SCALE

DESIGN	DRAWN	CHECKED

T - 28 Children Playground Area (Age 1 - 6 Years) 3D Photos

T - 29 Fitness Area (Age 7+ Years) 3D Photos

Layer:traab

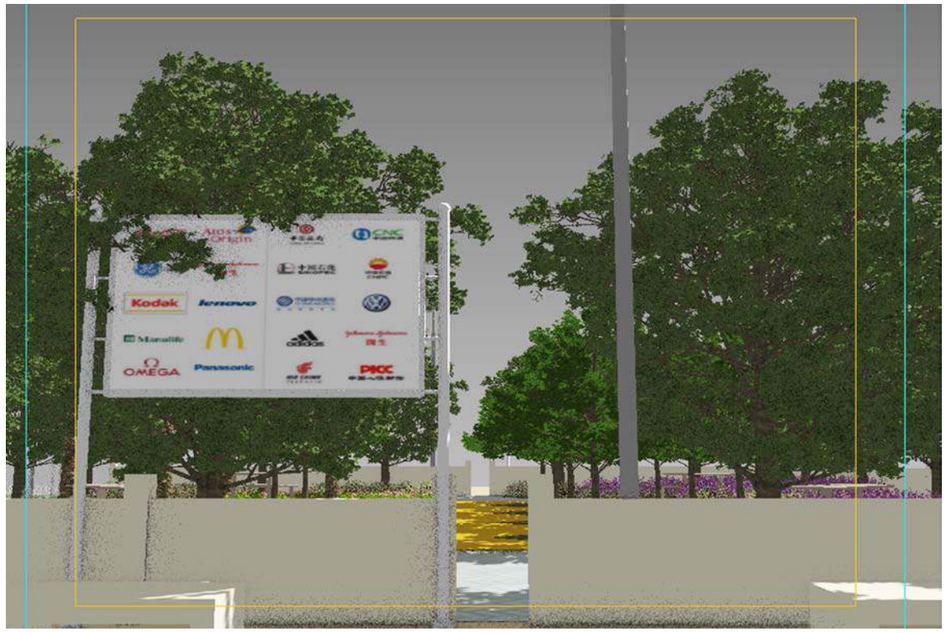
Kodak
lenovo
OMEGA
Panasonic
PICC