Invitation To Bid

ITB – 056/14

FOR

ESTABLISHMENT OF MINI PLAYGROUNDS IN AL DAIR & AL NASHWAH, IN THE MAJNOON AREA OF BASRAH, IRAQ

Volume II

Section 3

PART 4: - DRAWINGS

Amendment No.1

United Nations Development Programme
برنـــامـج الأمـــــم الـمـــــتحدة الإنـمـــــائي

ESTABLISHMENT OF MINI PLAYGROUNDS IN AL DAIR & AL NASHWAH SUB-DISTRICTS, MAJNOON AREA OF BASRAH, IRAQ

DRAWINGS

August 2014

#	Drawing Title Drawing Title	Revision No.
T - 00	Index	0
T - 01	Google Earth Map_Playgrounds #1 & 2_Al Dair	0
T - 02	Google Earth Map_Plaground #1_Al Dair	0
T - 03	General Layout #1 of Playground #1_Al Dair	0
T - 04	General Layout #2 of Playground #1_Al Dair	0
T - 05	Google Earth Map_Playground #2_Al Dair	0
T - 06	General Layout #1 of Playground #2_Al Dair	0
T - 07	General Layout #2 of Playground #2_Al Dair	0
T - 08	Google Earth Map_Playgrounds #1 & 2_Al Nashwah	0
T - 09	Google Earth Map_Plaground #1_Al Nashwah	0
T - 10	General Layout #1 of Playground #1_Al Nashwah	0
T - 11	General Layout #2 of Playground #1_Al Nashwah	0
T - 12	Google Earth Map_Playground #2_Al Nashwah	0
T - 13	General Layout #1 of Playground #2_Al Nashwah	0
T - 14	General Layout #2 of Playground #2_Al Nashwah	0
T - 15	Typical Elevations Plan Layout	0
T - 16	Typical Elevations Layout	0
T - 17	Typical Elevations Details Layout	1
T - 18	Typical Fence's Footing Plan Layout	0
T - 19	Typical Floor Finish Level Plan Layout	1
T-20a	Typical Floor Cross Sections & Details	1
T-20b	Typical Floor Cross Sections & Details	1
T-20c	Typical Floor Cross Sections & Details	1
T-20d	Typical Floor Cross Sections & Details	1
T - 21	Typical Mini Football Court's Markings Layout	0
T - 22	Typical Structural Details #1 Layout / Memorial Plaque, Concrete Tables & Concrete Benches	0
T - 23	Typical Structural Details #2 Layout / Sponsor Billboard & Warning Billboard	0
T - 24	Typical Structural Details #3 Layout / Football Goal Details	0
T - 25	Typical Irrigation Plan & Details Layout	0
T - 26	Typical Sewerage Details	0
T - 27	Typical Equipment List	0
T - 28	Children Playground Area (Age 1 - 6 Years) 3D Photos	0
T - 29	Fitness Area (Age 7+ Years) 3D Photos	0

UNITED NATIONS
DEVELOPMENT
PROGRAMME

PROJECT (NAME & NO.)
Establishment of Mini Playgrounds in Al Dair & Al Nashwah Sub-Districts, Majnoon Area of Basrah, Iraq

DESIGN GROUP
Architectural

Sheet no.

DRWG. TITLE
Index

DRWG. STATUS
NOT APP. | APP.+COM | APPRVD

DRWG. NO.
T - 00 Revision No. 0

SCALE

DESIGN | DRAWN | CHECKED

T - 01 Google Earth Map_Playgrounds # 1 & 2_Al Dair - Revision No. 0

Google earth

miles 9

km 10

T - 02 Google Earth Map_Playground #1_Al Dair - Revision No. 0

Google earth

feet 3000
km 1

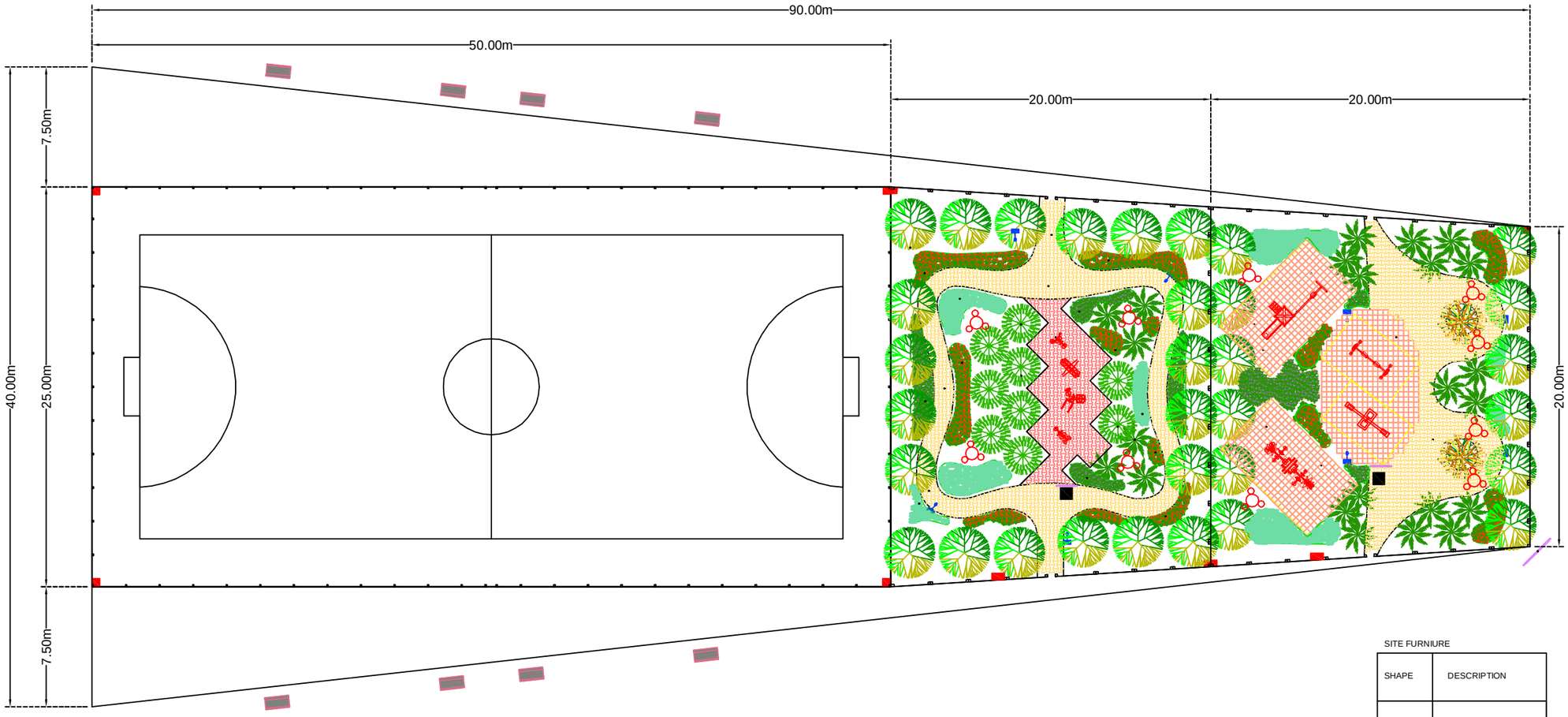

PLANTING SCHEDULE (TREES)

SHAPE	DESCRIPTION	SCIENTIFIC NAME	COMMON NAME	ARABIC NAME
	TREES TYPE 1	ACACIA cyanophylla	MOMOSA	اكاسيا مصرية
	TREES TYPE 2	PHOENIX dactilifera	DATE PALM	نخيل
	TREES TYPE 3	CONOCARPUS lancifolius	QALAB	دمس سحلي
	TREES TYPE 4	ALBIZA julibrissin	SILK TREE	البيزاما

PLANTING SCHEDULE (SHRUBS)

SHAPE	DESCRIPTION	SCIENTIFIC NAME	COMMON NAME	ARABIC NAME
	SHRUBS TYPE 1	PELARGONIUM hortorum	COMMON GERANIUM	جيرنيا
	SHRUBS TYPE 2	LAVANDULA angustifolia	LAVENDER	للفندر
	SHRUBS TYPE 3	LANTANA camara	COMMON LANTANA	امر كاهير

PAVEMENT SCHEDULE

SHAPE	DESCRIPTION
	INTERLOCK TILES Type 1
	INTERLOCK TILES Type 2
	RUBBER PAVEMANT

SITE FURNIURE

SHAPE	DESCRIPTION
	CONCRETE BENCH
	SPONSOR BILLBOARD
	WASTE BIN
	CONCRETE TABLE & CONCRETE BENCHES
	WARNING BILLBOARD
	MEMORIAL PLAQUE

UNITED NATIONS DEVELOPMENT PROGRAMME

UNDP

PROJECT (NAME & NO.)
Establishment of Mini Playgrounds in Al Dair & Al Nashwah Sub-Districts, Majnoon Area of Basrah, Iraq

DESIGN GROUP
Architectural

Sheet no.

DRWG. TITLE
General Layout #1 of Playground #1_Al Dair

DRWG. STATUS
NOT APP. | APP.+COM | APPRVD

DRWG. NO.
T - 03 Revision No. 0

SCALE

DESIGN | DRAWN | CHECKED

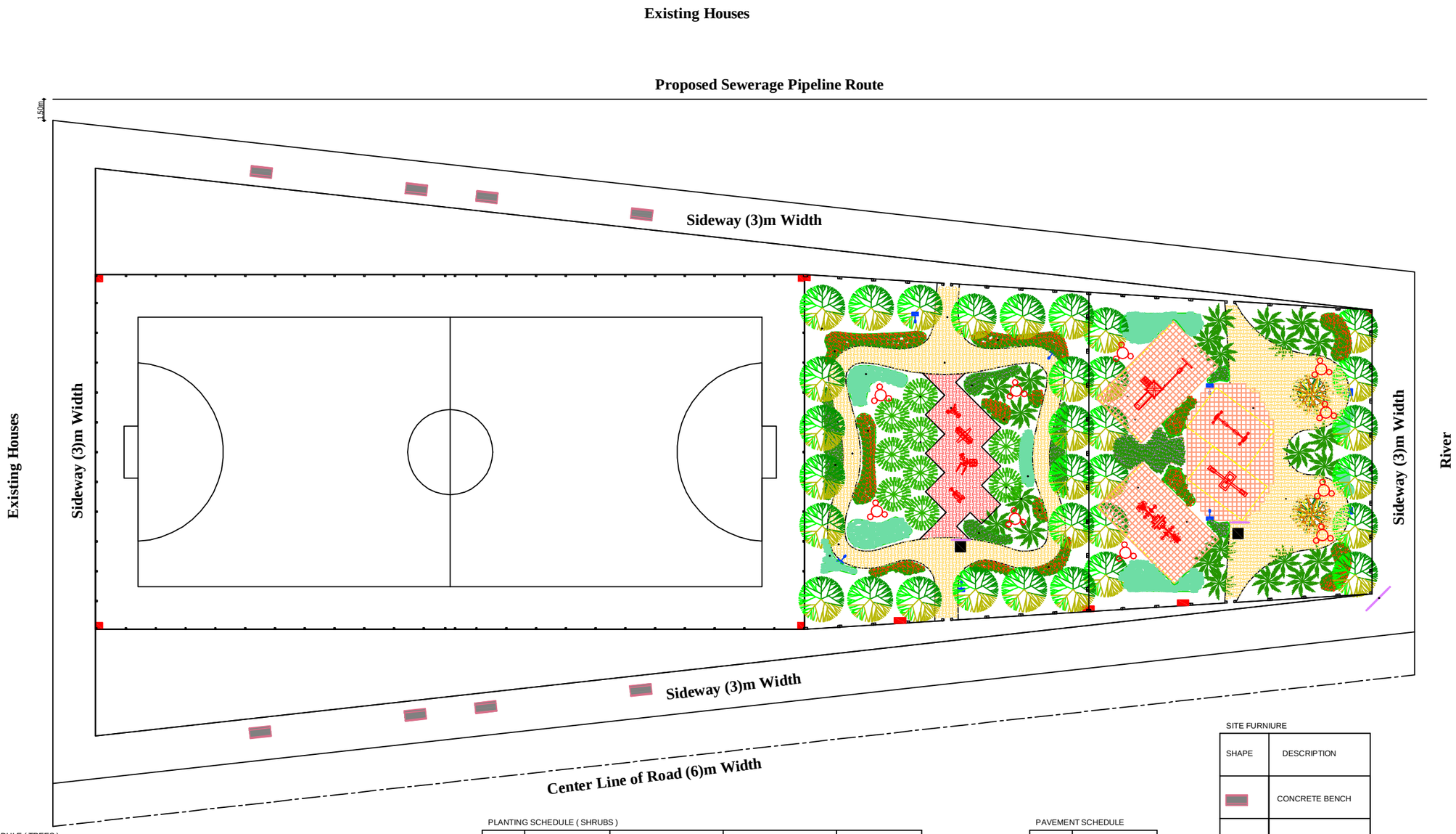

PLANTING SCHEDULE (TREES)

SHAPE	DESCRIPTION	SCIENTIFIC NAME	COMMON NAME	ARABIC NAME
	TREES TYPE 1	ACACIA cyanophylla	MOMOSA	اكاسيا مصرية
	TREES TYPE 2	PHOENIX dactilifera	DATE PALM	نخيل
	TREES TYPE 3	CONOCARPUS lancifolius	QALAB	قنس سخلي
	TREES TYPE 4	ALBIZA julibrissin	SILK TREE	البريشة

PLANTING SCHEDULE (SHRUBS)

SHAPE	DESCRIPTION	SCIENTIFIC NAME	COMMON NAME	ARABIC NAME
	SHRUBS TYPE 1	PELARGONIUM hortorum	COMMON GERANIUM	جيرنيوم
	SHRUBS TYPE 2	LAVANDULA angustifolia	LAVENDER	لافندر
	SHRUBS TYPE 3	LANTANA camara	COMMON LANTANA	لنتانا كاملجر

PAVEMENT SCHEDULE

SHAPE	DESCRIPTION
	INTERLOCK TILES Type 1
	INTERLOCK TILES Type 2
	RUBBER PAVEMANT

SITE FURNIURE

SHAPE	DESCRIPTION
	CONCRETE BENCH
	SPONSOR BILLBOARD
	WASTE BIN
	CONCRETE TABLE & CONCRETE BENCHES
	WARNING BILLBOARD
	MEMORIAL PLAQUE

UNITED NATIONS DEVELOPMENT PROGRAMME

PROJECT (NAME & NO.)
Establishment of Mini Playgrounds in Al Dair & Al Nashwah Sub-Districts, Majnoon Area of Basrah, Iraq

DESIGN GROUP: Architectural

Sheet no.

DRWG. TITLE: General Layout #2 of Playground #1_Al Dair

DRWG. STATUS: NOT APP. | APP. +COM | APPROV

DRWG. NO.: T - 04 Revision No. 0

SCALE

DESIGN | DRAWN | CHECKED

T - 05 Google Earth Map_Playground #2_Al Dair - Revision No. 0

Google earth

feet 3000

km 1

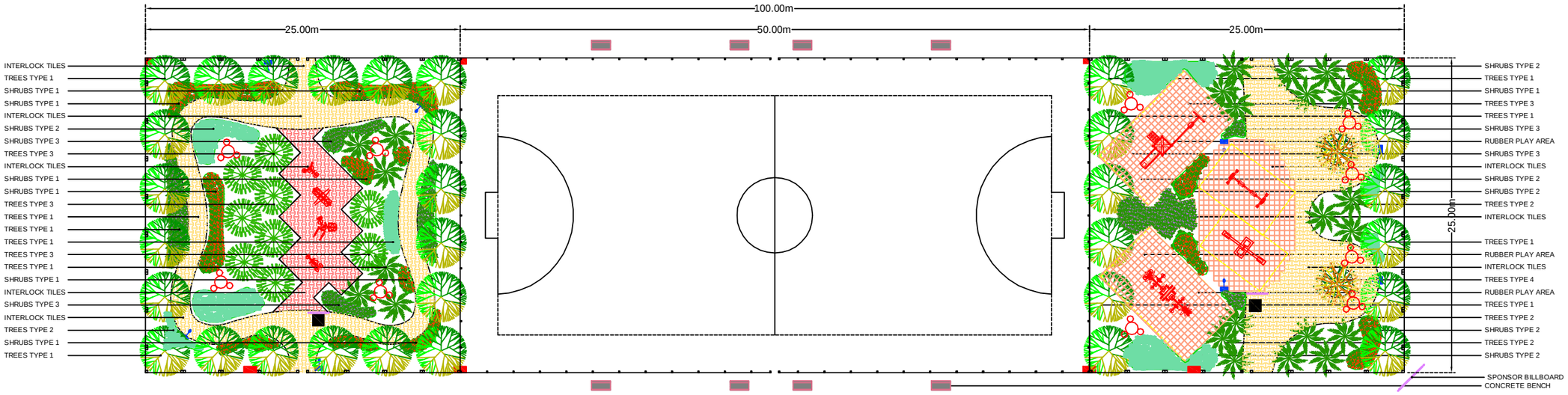

PLANTING SCHEDULE (TREES)

SHAPE	DESCRIPTION	SCIENTIFIC NAME	COMMON NAME	ARABIC NAME
	TREES TYPE 1	ACACIA cyanophylla	MOMOSA	اكاسيا مسزيه
	TREES TYPE 2	PHOENIX dactilifera	DATE PALM	نخيل
	TREES TYPE 3	CONOCARPUS lancifolius	QALAB	دس سخلي
	TREES TYPE 4	ALBIZA julibrissin	SILK TREE	البزيلية

PLANTING SCHEDULE (SHRUBS)

SHAPE	DESCRIPTION	SCIENTIFIC NAME	COMMON NAME	ARABIC NAME
	SHRUBS TYPE 1	PELARGONIUM hortorum	COMMON GERANIUM	جيرة
	SHRUBS TYPE 2	LAVANDULA angustifolia	LAVENDER	اللفندر
	SHRUBS TYPE 3	LANTANA camara	COMMON LANTANA	ام شاهين

PAVEMENT SCHEDULE

SHAPE	DESCRIPTION
	INTERLOCK TILES Type 1
	INTERLOCK TILES Type 2
	RUBBER PAVEMANT

SITE FURNIURE

SHAPE	DESCRIPTION
	CONCRETE BENCH
	SPONSOR BILLBOARD
	WASTE BIN
	CONCRETE TABLE & CONCRETE BENCHES
	WARNING BILLBOARD
	MEMORIAL PLAQUE

UNITED NATIONS DEVELOPMENT PROGRAMME

PROJECT (NAME & NO.)
Establishment of Mini Playgrounds in Al Dair & Al Nashwah Sub-Districts, Majnoon Area of Basrah, Iraq

DESIGN GROUP
Architectural

Sheet no.

DRWG. TITLE
General Layout #1 of Playground #2_Al Dair

DRWG. STATUS
NOT APP. | APP. CLIM | APPROVD

DRWG. NO.
T - 06 Revision No. 0

SCALE

DESIGN | DRAWN | CHECKED

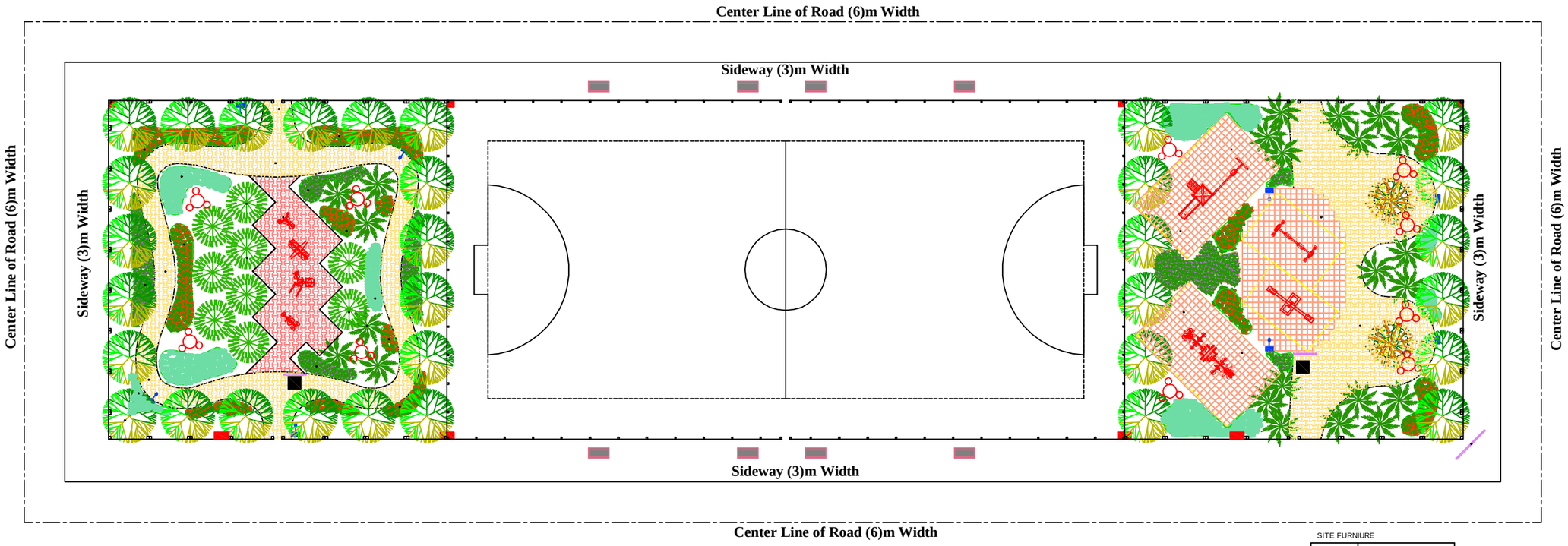

PLANTING SCHEDULE (TREES)

SHAPE	DESCRIPTION	SCIENTIFIC NAME	COMMON NAME	ARABIC NAME
	TREES TYPE 1	ACACIA cyanophylla	MOMOSA	اكاسيا مسرية
	TREES TYPE 2	PHOENIX dactilifera	DATE PALM	نخيل
	TREES TYPE 3	CONOCARPUS lancifolius	QALAB	دس سحلي
	TREES TYPE 4	ALBIZA julibrissin	SILK TREE	البيزيا

PLANTING SCHEDULE (SHRUBS)

SHAPE	DESCRIPTION	SCIENTIFIC NAME	COMMON NAME	ARABIC NAME
	SHRUBS TYPE 1	PELARGONIUM hortorum	COMMON GERANIUM	جيرنيوم
	SHRUBS TYPE 2	LAVANDULA angustifolia	LAVENDER	لافندر
	SHRUBS TYPE 3	LANTANA camara	COMMON LANTANA	لنتانا

PAVEMENT SCHEDULE

SHAPE	DESCRIPTION
	INTERLOCK TILES Type 1
	INTERLOCK TILES Type 2
	RUBBER PAVEMANT

SITE FURNIURE

SHAPE	DESCRIPTION
	CONCRETE BENCH
	SPONSOR BILLBOARD
	WASTE BIN
	CONCRETE TABLE & CONCRETE BENCHES
	WARNING BILLBOARD
	MEMORIAL PLAQUE

UNITED NATIONS DEVELOPMENT PROGRAMME

PROJECT (NAME & NO.)
Establishment of Mini Playgrounds in Al Dair & Al Nashwah Sub-Districts, Majnoon Area of Basrah, Iraq

DESIGN GROUP: Architectural

Sheet no.

DRWG. TITLE: General Layout #2 of Playground #2, Al Dair

DRWG. STATUS: NOT APP. | APP. +COM | APPRVD

DRWG. NO.: T - 07 Revision No. 0

SCALE

DESIGN | DRAWN | CHECKED

T - 08 Google Earth Map_Playgrounds #1 & 2_Al Nashwah - Revision No. 0

Google earth

miles 4

km 7

T - 09 Google Earth Map Playground #1_Al Nashwah - Revision No. 0

Google earth

miles 1

km 1

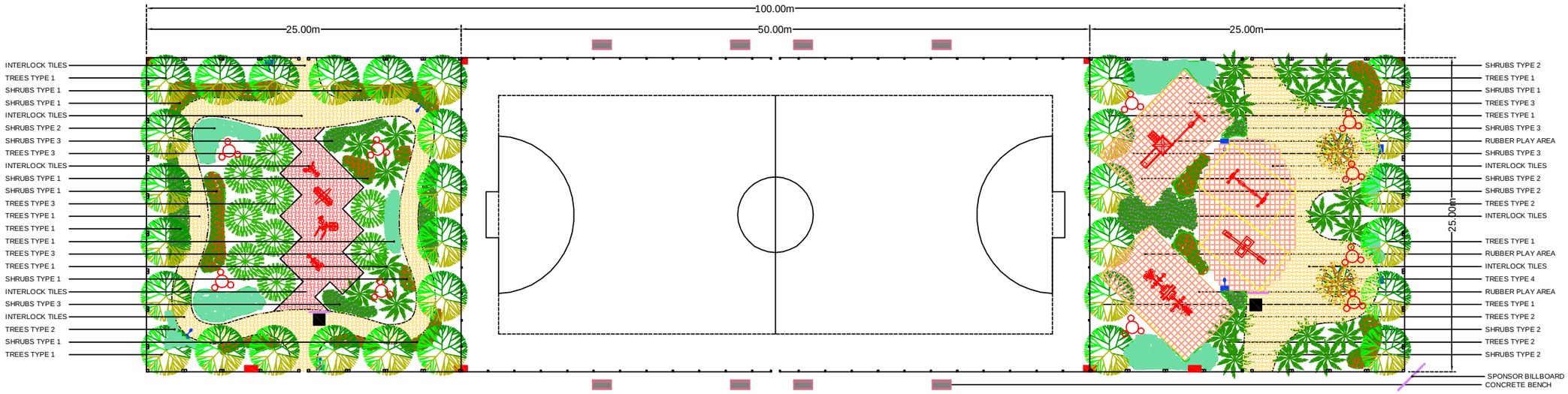

UNITED NATIONS DEVELOPMENT PROGRAMME

PROJECT (NAME & NO.)
Establishment of Mini Playgrounds in Al Dair & Al Nashwah Sub-Districts, Majnoon Area of Basrah, Iraq

DESIGN GROUP
Architectural

Sheet no.

DRWG. TITLE
General Layout #1 of Playground #1_Al Nashwah

DRWG. STATUS

NOT APP. | APP.~CLIM | APPRVD

DRWG. NO.
T - 10 Revision No. 0

SCALE

DESIGN | DRAWN | CHECKED

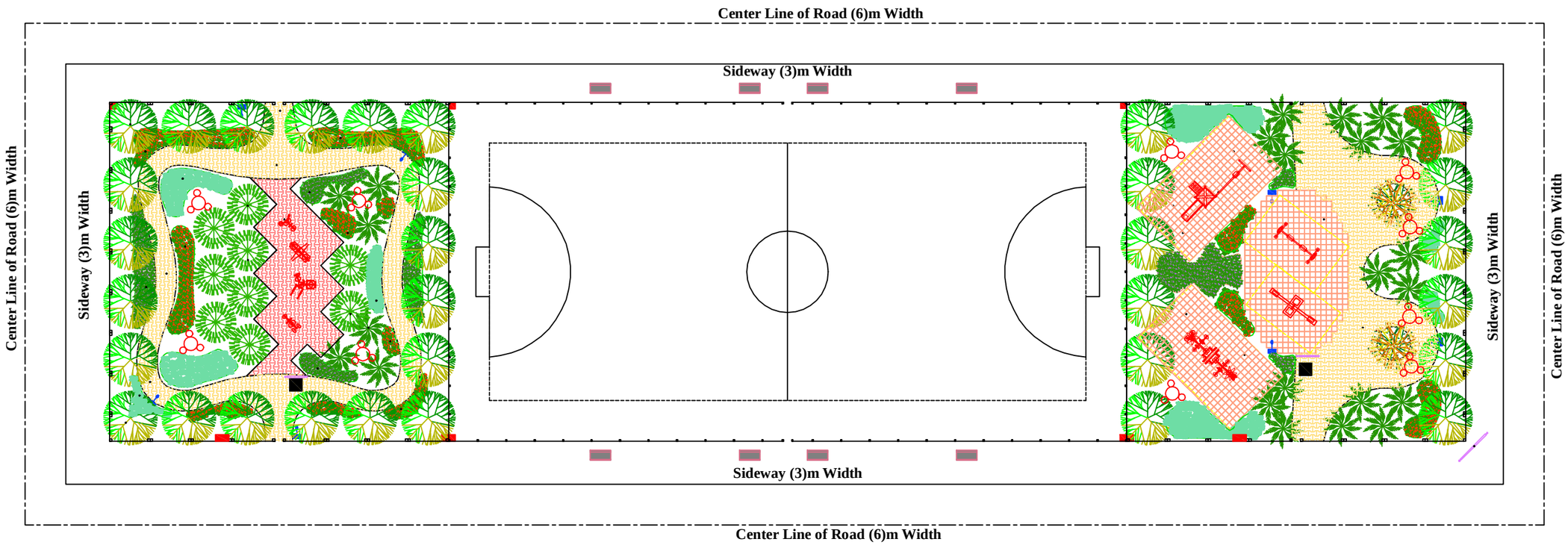

UNITED NATIONS DEVELOPMENT PROGRAMME

PROJECT (NAME & NO.)
Establishment of Mini Playgrounds in Al Dair & Al Nashwah Sub-Districts, Majnoon Area of Basrah, Iraq

DESIGN GROUP: **Architectural**

Sheet no.

DRWG. TITLE: General Layout #2 of Playground #1_Al Nashwah

DRWG. STATUS: NOT APP. | APP. /COM | APPROVD

DRWG. NO.: T - 11 Revision No. 0

SCALE

DESIGN | DRAWN | CHECKED

Google earth

feet 3000
km 1

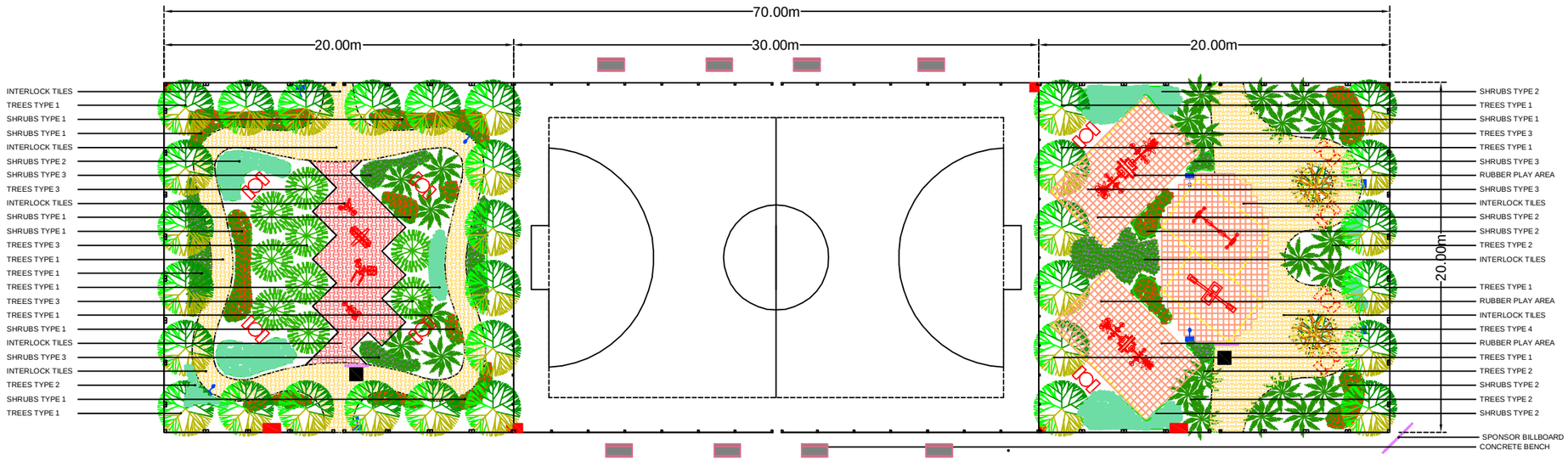

UNITED NATIONS DEVELOPMENT PROGRAMME

PROJECT (NAME & NO.)
Establishment of Mini Playgrounds in Al Dair & Al Nashwah Sub-Districts, Majnoon Area of Basrah, Iraq

DESIGN GROUP
Architectural

Sheet no.

DRWG. TITLE
General Layout #1 of Playground #2_Al Nashwah

DRWG. STATUS

NOT APP.	APP.+COM	APPRVD

DRWG. NO.
T - 13 Revision No. 0

SCALE

DESIGN	DRAWN	CHECKED

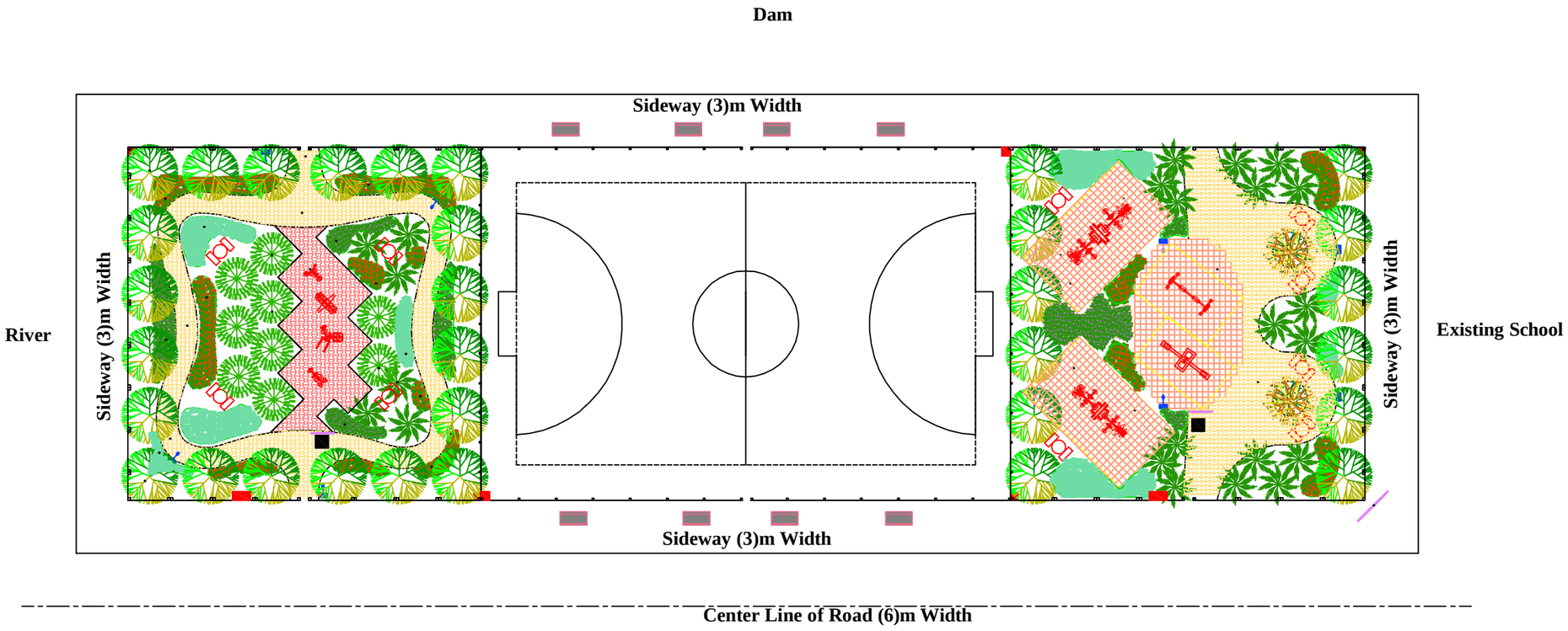

UNITED NATIONS DEVELOPMENT PROGRAMME

PROJECT (NAME & NO.)
Establishment of Mini Playgrounds in Al Dair & Al Nashwah Sub-Districts, Majnoon Area of Basrah, Iraq

DESIGN GROUP
Architectural

Sheet no.

DRWG. TITLE
General Layout #2 of Playground #2_Al Nashwah

DRWG. STATUS

NOT APP.	APP.+COM	APPRVD

DRWG. NO.
T - 14 Revision No. 0

SCALE

DESIGN	DRAWN	CHECKED

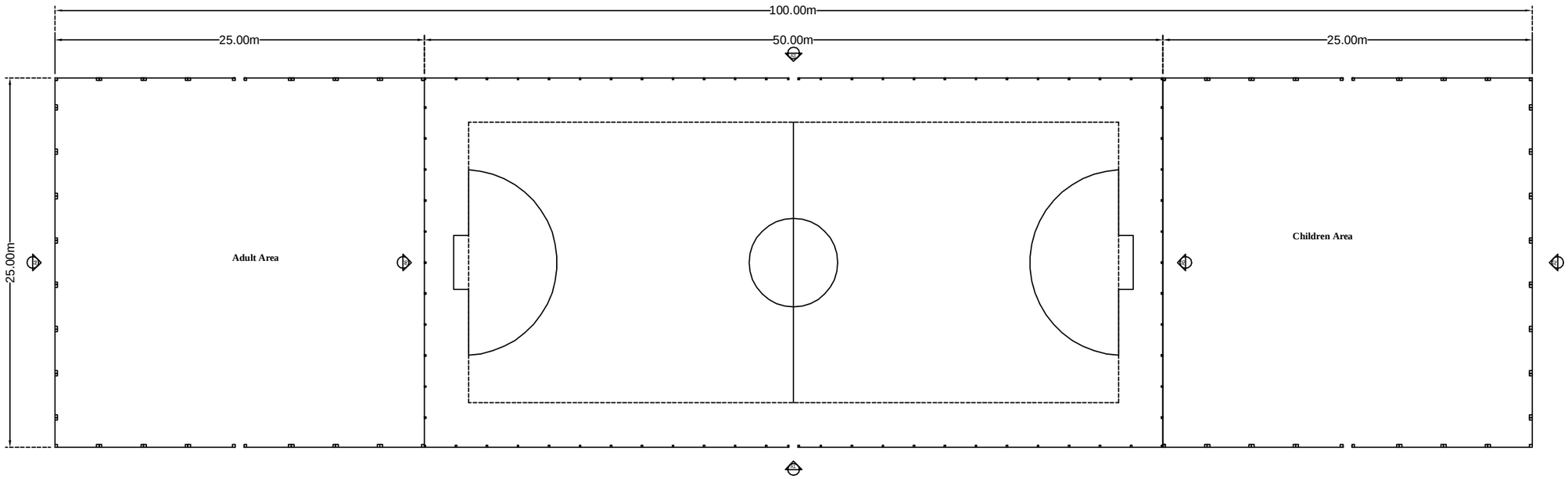

UNITED NATIONS DEVELOPMENT PROGRAMME

PROJECT (NAME & NO.)
Establishment of Mini Playgrounds in Al Dair & Al Nashwah Sub-Districts, Majnoon Area of Basrah, Iraq

DESIGN GROUP
Architectural

Sheet no.

DRWG. TITLE
Typical Elevations Plan Layout

DRWG. STATUS

NOT APP.	APP. *CDM	APPRVD

DRWG. NO.
T - 15 Revision No. 0

SCALE

DESIGN	DRAWN	CHECKED

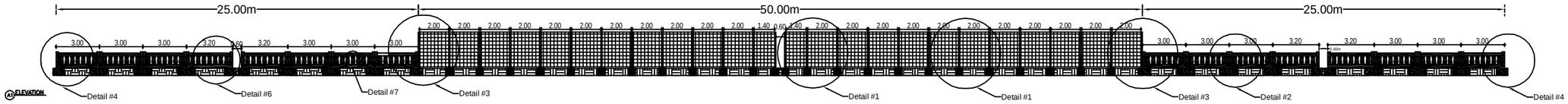

A1 ELEVATION

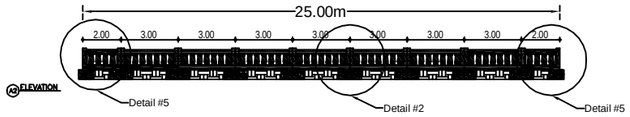

A2 ELEVATION

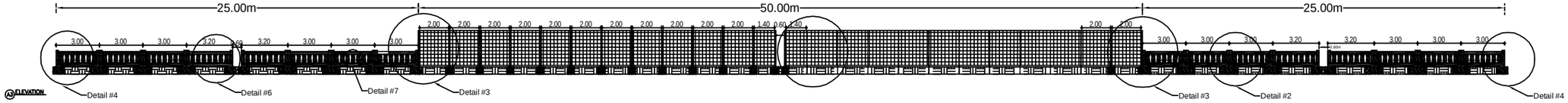

A3 ELEVATION

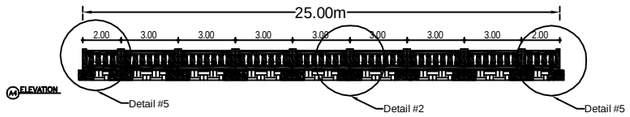

A4 ELEVATION

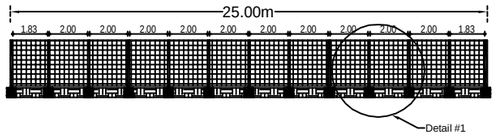

A5 ELEVATION

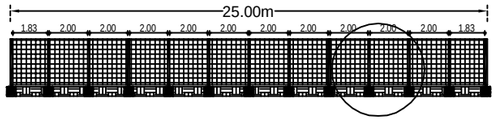

A6 ELEVATION

UNITED NATIONS DEVELOPMENT PROGRAMME

PROJECT (NAME & NO.)
Establishment of Mini Playgrounds in Al Dair & Al Nashwah Sub-Districts, Majnoon Area of Basrah, Iraq

DESIGN GROUP
ArchMosteraei

Sheet no.

DRWG. TITLE
Typical Elevations Layout

DRWG. STATUS
NOT APP. | APP. *CGM | APPRVD

DRWG. NO.
T - 16 Revision No. 0

SCALE

DESIGN | DRAWN | CHECKED

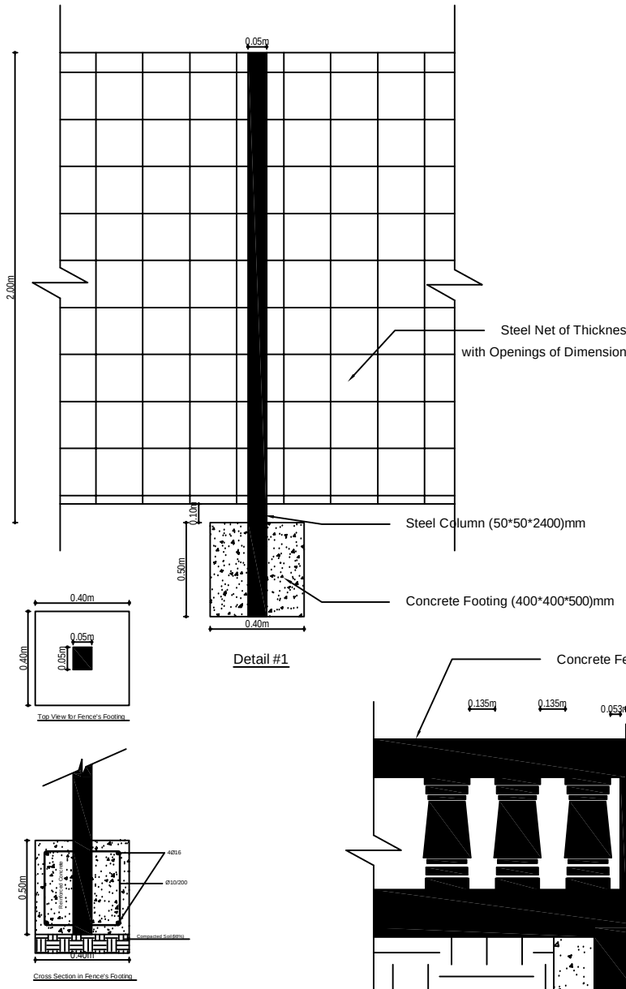

Detail #1

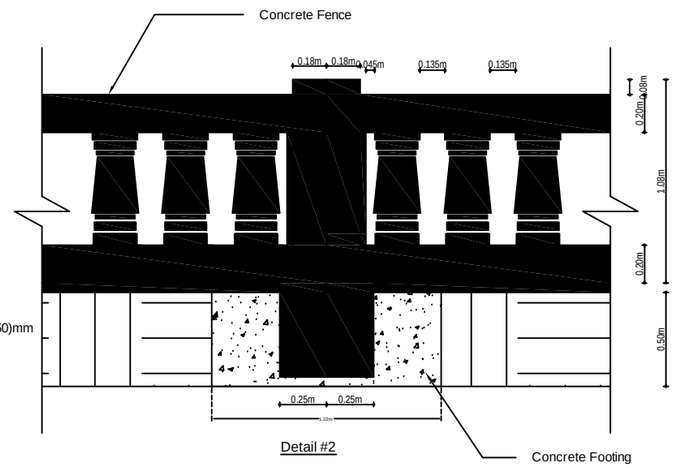

Detail #2

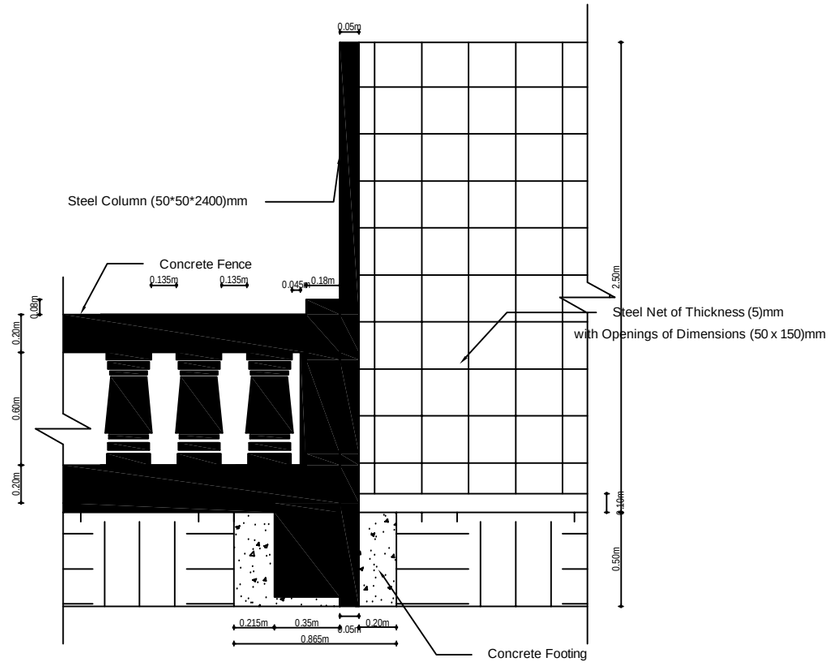

Detail #3

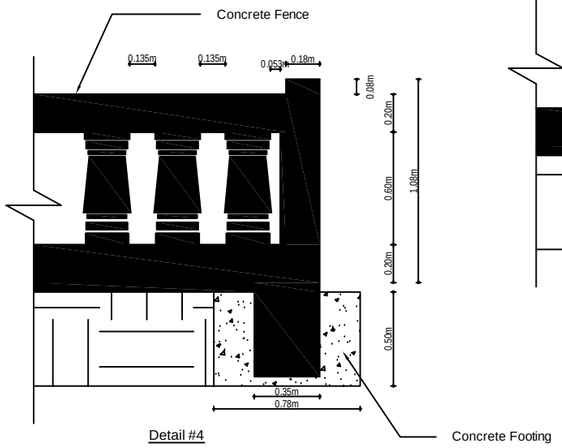

Detail #4

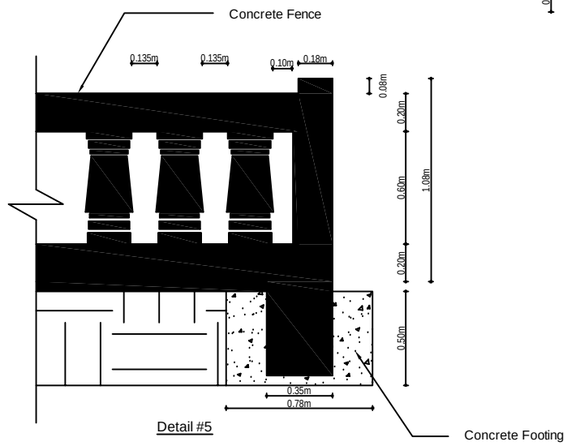

Detail #5

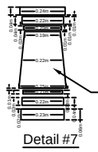

Detail #7

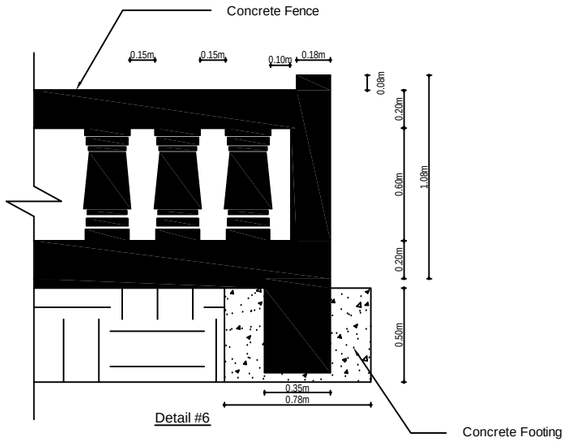

Detail #6

Notes

1. The steel columns section is of dimensions (50x50) & of thickness (1.5)mm.
2. The steel net is of diameter (5mm) and openings of dimensions (50*150)mm.
3. All the used steel for the fence must be high tension, galvanized & thermal painted.
4. The part of the steel coloumn inside the concrete footing must be painted with epoxy few minutes before putting it into concrete.

Notes

1. Type V sulphate-resisting cement must be used in all concrete works that will be in contact with the soil.
2. Minimum cement content is 380 kg/m³.
3. Maximum free water / cement ratio is 0.45 by weight.
4. Minimum yield stress of reinforcing bars =420MPa.
5. Minimum concrete cover for footing =50mm.
6. If the length of reinforcing bars is not enough, then the minimum overlap splices = 50 times the bar.
7. The hock of the stirrups must be with angle (45) degree.
8. Three layers of asphaltic material at the base and sides of the concrete footing.
9. Enough curing must be applied to the blinding concrete and footing.
10. The dimensions of the reinforced concrete foundations are of the fence (400mm length * 400mm width * 500mm depth).
11. The part of the concrete column the concrete footing must be covered with epoxy just few minutes before casting the concrete.
12. The whole footings of the fence will be below the finish level of the area's surface.
13. The playground and fitness equipment will be installed as per the manufacturer instructions and technical specifications of the equipment.
14. For footings, concrete columns & concrete fence, the minimum compressive cubic strength of concrete is (25 MPa).
15. The finish level of the footing will be the same finish level of the surrounding area.
16. After installing the concrete footings, the surrounding areas of the footings must be returned to its original status before starting the footings works.

UNITED NATIONS DEVELOPMENT PROGRAMME

PROJECT (NAME &NO)
Establishment of Mini Playgrounds in Al Dair & Al Nashwah Sub-Districts, Majnoon Area of Basrah, Iraq

DESIGN GROUP: **Architectural**

Sheet no.

DRWG. TITLE: Typical Elevations Details Layout

DRWG. STATUS: NOT APP. | APP. <CIM | APPRVD

DRWG. NO: T - 17 Revision No. 1

SCALE

DESIGN | DRAWN | CHECKED

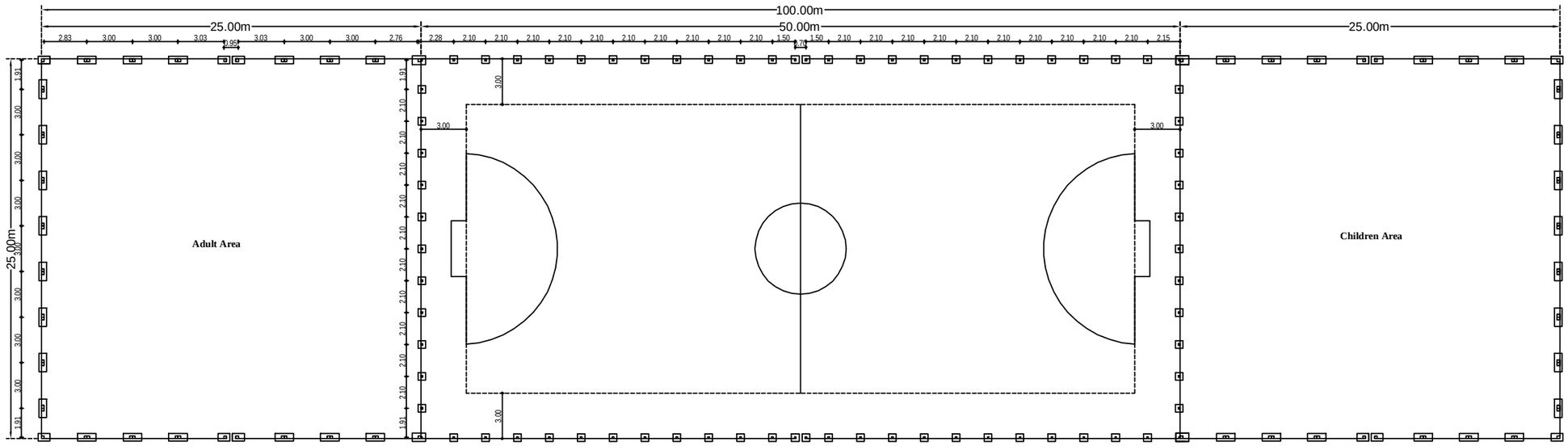

UNITED NATIONS
DEVELOPMENT
PROGRAMME

PROJECT (NAME & NO.)
Establishment of Mini Playgrounds in Al Dair & Al Nashwah Sub-Districts, Majnoon Area of Basrah, Iraq

DESIGN GROUP
Architectural

Sheet no.

DRWG. TITLE
Typical Fence's Footing Plan Layout

DRWG. STATUS
NOT APP. | APP.+COM | APPRVD

DRWG. NO.
T - 18 Revision No. 0

SCALE

DESIGN | DRAWN | CHECKED

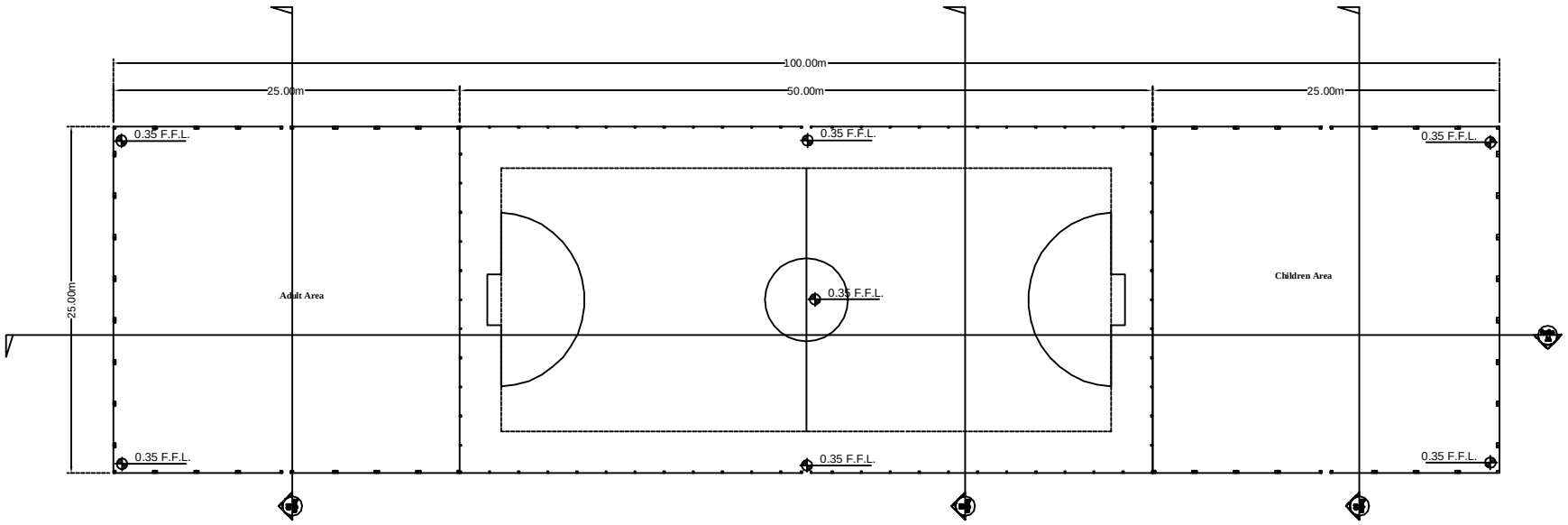

Notes:

1) The 0.00 F.F.L. at the borders equals the finish level (asphalt level) of the surrounding streets plus (350)mm.

2) No need for slopes in the field for water drainage **.**

UNITED NATIONS DEVELOPMENT PROGRAMME

PROJECT / NAME & NO.

Establishment of Mini Playgrounds in Al Dair & Al Nashwah Sub-Districts, Majnoon Area of Basrah, Iraq

DESIGN GROUP

Architectural

Revision

DRAWING TITLE

Typical Floor Finish Level Plan Layout

DRAWING STATUS

DATE A.D. | DRAWING | CHECKED

DRAWING NO.

T - 19 **Revision No. 1**

SCALE

DATE A.D. | DRAWN | CHECKED

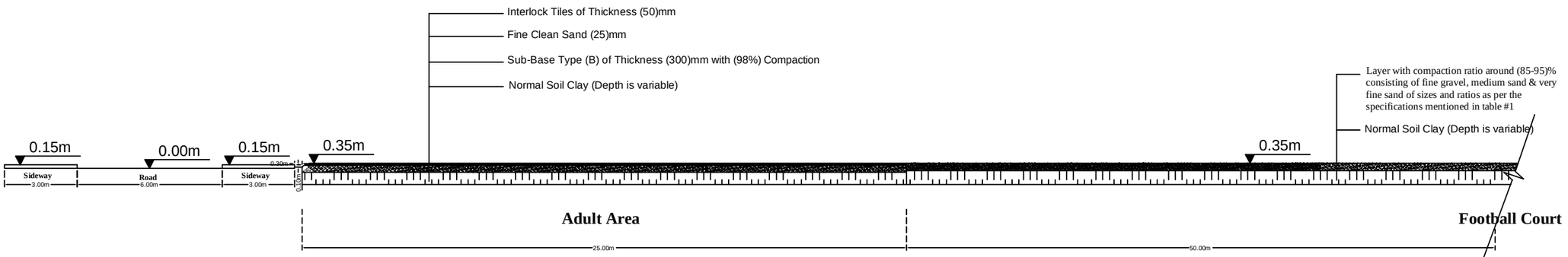

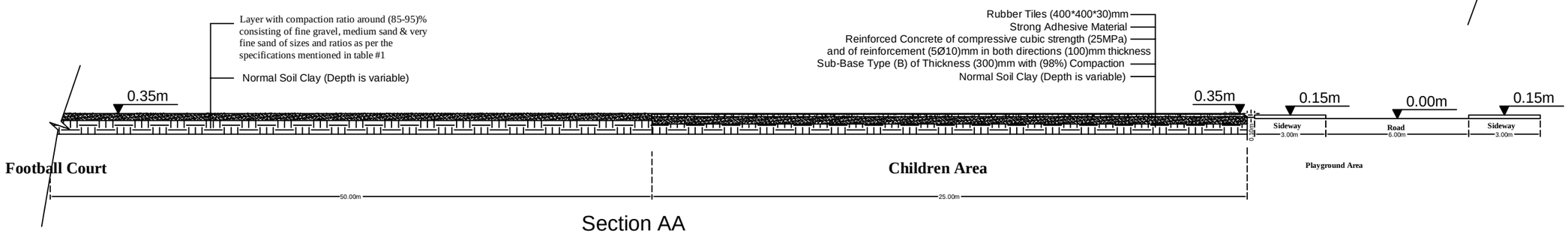

Section AA

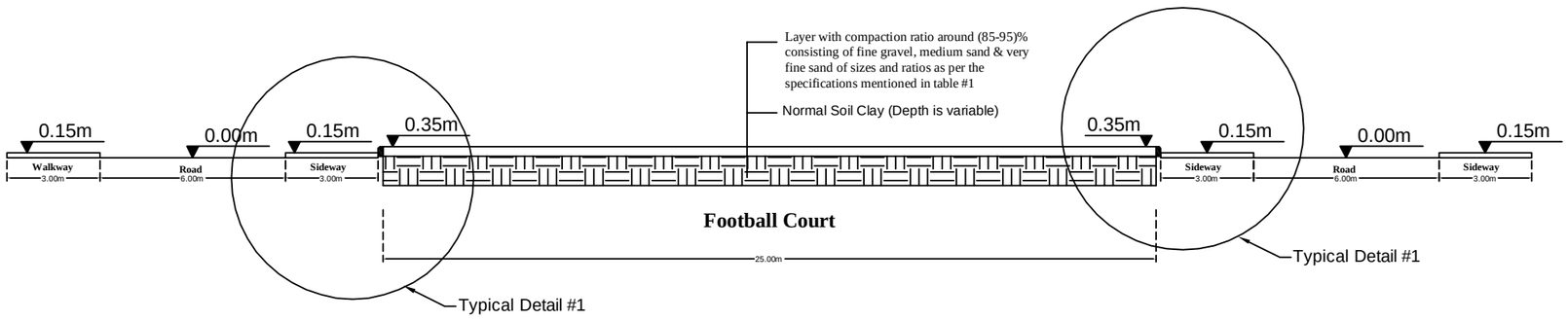

Section BB

UNITED NATIONS DEVELOPMENT PROGRAMME

UNDP

PROJECT (NAME & NO.)
Establishment of Mini Playgrounds in Al Dair & Al Nashwah Sub-Districts, Majnoon Area of Basrah, Iraq

DESIGN GROUP
Architectural

Sheet no.

DRWG. TITLE
Typical Floor Cross Sections & Details Layout

DRWG. STATUS

NOT APP.	APP.+COM	APPRVD

DRWG. NO.
T - 20a Revision No. 1

SCALE

DESIGN	DRAWN	CHECKED

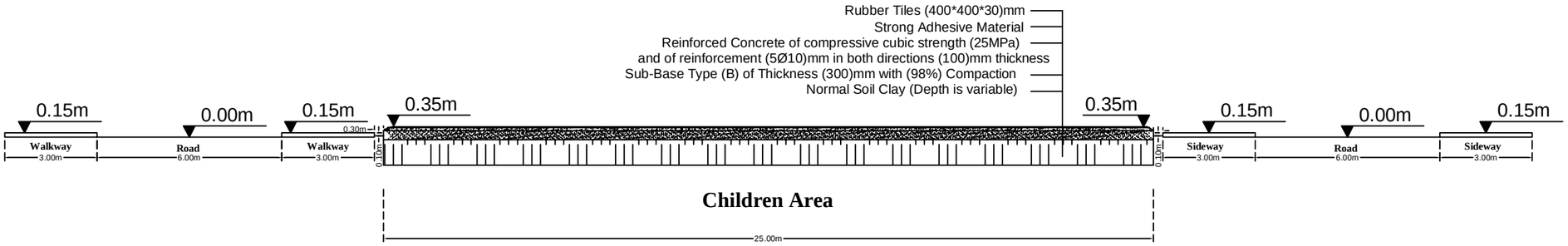

Section CC

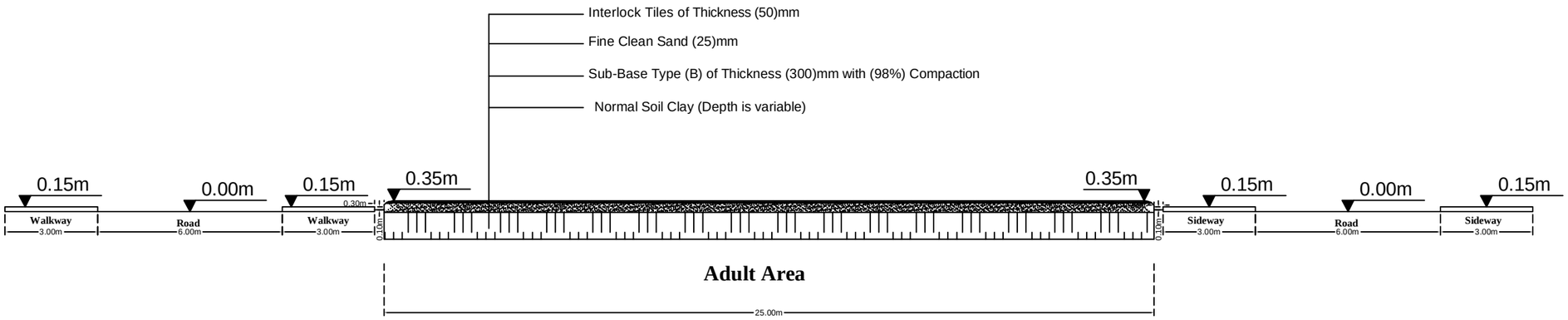

Section DD

UNITED NATIONS DEVELOPMENT PROGRAMME

PROJECT (NAME & NO.)
Establishment of Mini Playgrounds in Al Dair & Al Nashwah Sub-Districts, Majnoon Area of Basrah, Iraq

DESIGN GROUP
Architectural

Sheet no.

DRWG. TITLE
Typical Floor Cross Sections & Details Layout

DRWG. STATUS

NOT APP.	APP.+COM	APPRVD

DRWG. NO.
T - 20b Revision No. 1

SCALE

DESIGN	DRAWN	CHECKED

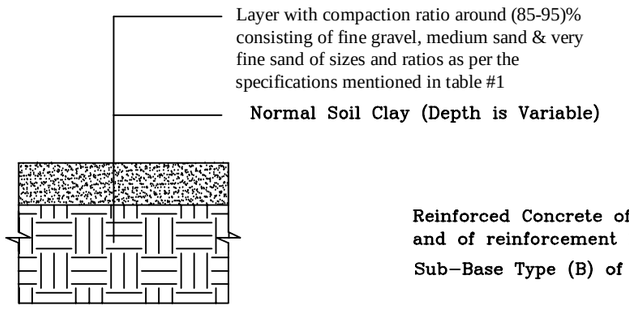

Cross Section in Football Court Floor Area

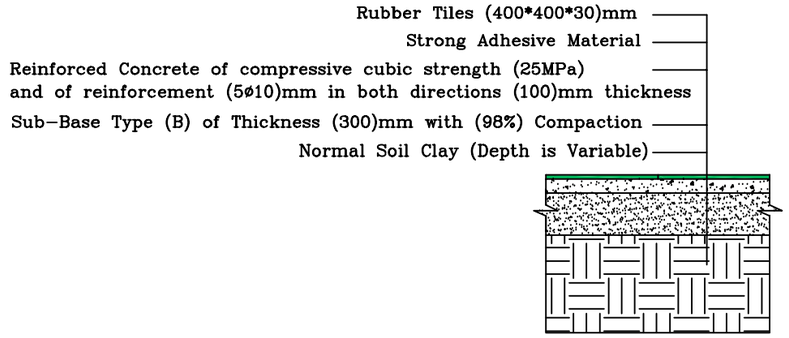

Cross Section in Rubber Tiles Floor Areas

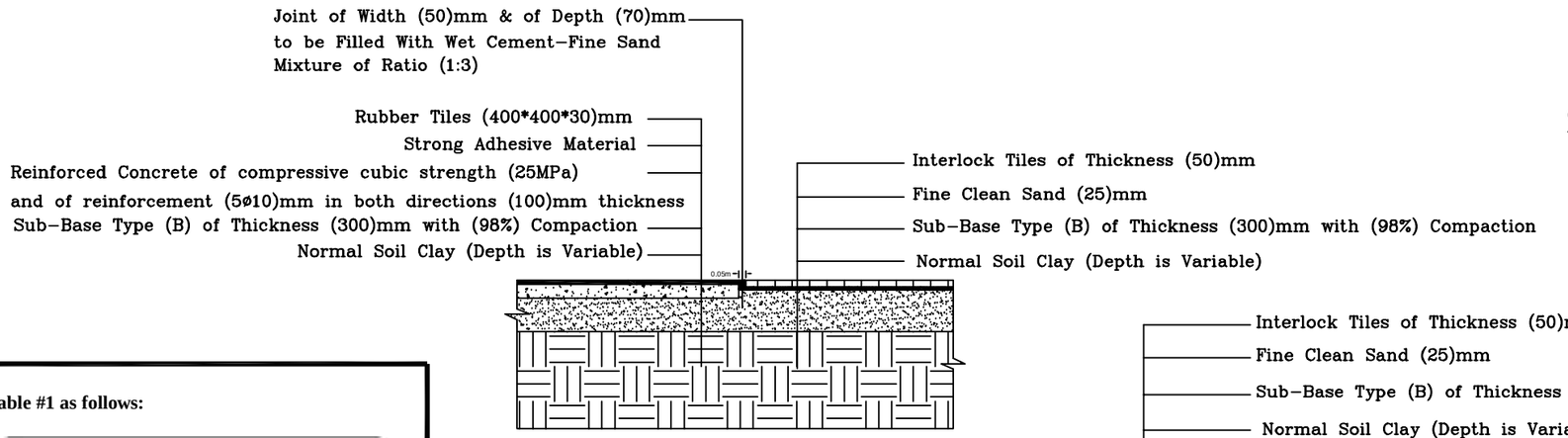

Cross Section in Connection Between Rubber Floor Tiles & Interlock Floor Tiles

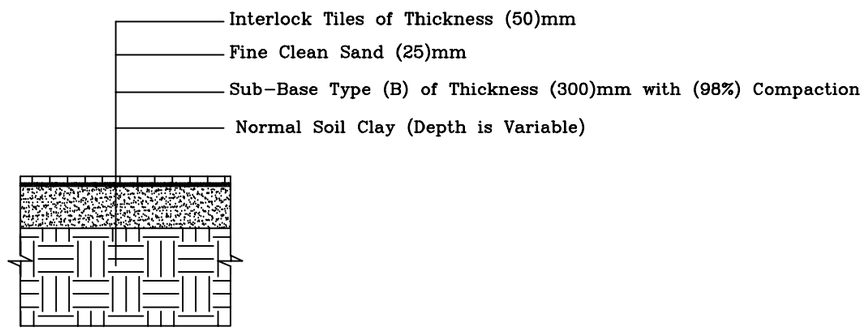

Cross Section in Interlock Tiles Floor Areas

Table #1 as follows:

TABLE 1 TEXTURAL CLASSIFICATION FOR HIGH TRAFFIC TURFGRASS FIELDS

U.S.D.A. Discipline Name	Particle Size mm	U.S.D.A. Sieve	Standard Number	% Range of Suitable Sands
GRAVEL	4.00	5		0-10%
FINE GRAVEL	4.00-2.00	10		
VERY COARSE SAND	2.00-1.00	18		
COARSE SAND	1.00-0.50	35		
MEDIUM SAND	0.50-0.25	60	60%	85-95%
FINE SAND	0.25-0.10	140		
VERY FINE SAND	0.10-0.05	270		
SILT	0.05-0.002	-		2-8%
CLAY	0.002-			

Notes:

Excerpt from CALIFORNIA TURFGRASS CULTURE, Department of Plant Science, University of California, USA.

1) ***No Need to Crown a Sand Football Field***

Fields constructed of clays, loams, or artificial turf de- pend on surface drainage to remove water that cannot move rapidly into the surface and through the soil profile. This is why football fields usually have 12 to 24 inch crowns. A crown is not required and has only become a standard procedure in football field constructlon to help remove excess surface water. However, a sand football field, if well constructed and correctly maintained, accepts (infiltration) and moves water through it profile (hydrau- lic conductivity) faster than any irrigation system or heavy rain can apply it. This is particularly beneficial when the field is also used for other sports, since crown- ing may then be undesirable. Surface catch basins at the edges of the field can also be eliminated as a sand field does not rely on surface drainage.

2) ***Removal of Excess Water***

It is not uncommon for a false water table to develop at the interface of the sand layer and the parent soil base. A false water table can occur even if the right sand is used and is correctly placed 12 to 18 inches deep on the parent soil. This is because few parent soils (clays, clay loams, or loams) can accommodate water at a rate greater than 0.25 inch per hour and, when compacted, infiltration rates often drop to 0.01 to 0.1 inch per hour. Therefore. excess water moving through the surface of a sand field accumulates at the interface between the sand and the parent soil.

UNITED NATIONS DEVELOPMENT PROGRAMME

PROJECT (NAME & NO.)
Establishment of Mini Playgrounds in Al Dair & Al Nashwah Sub-Districts, Majnoon Area of Basrah, Iraq

DESIGN GROUP
Architectural

Sheet no.

DRWG. TITLE
Typical Floor Cross Sections & Details Layout

DRWG. STATUS
NOT APP. | APP.+COM | APPRVD

DRWG. NO.
T - 20c Revision No. 1

SCALE

DESIGN | DRAWN | CHECKED

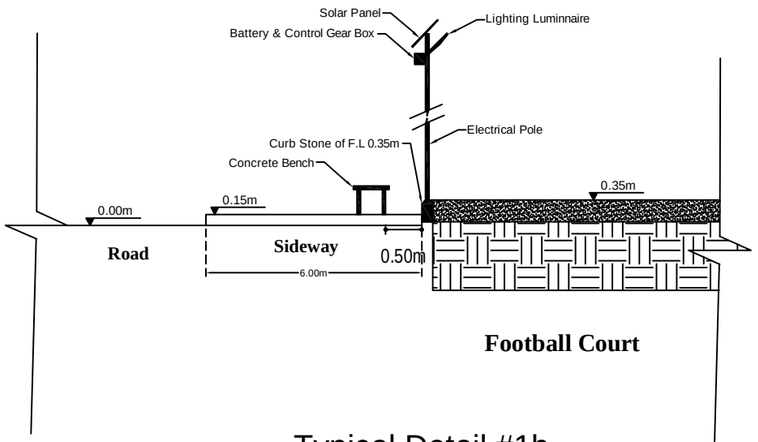

Typical Detail #1b

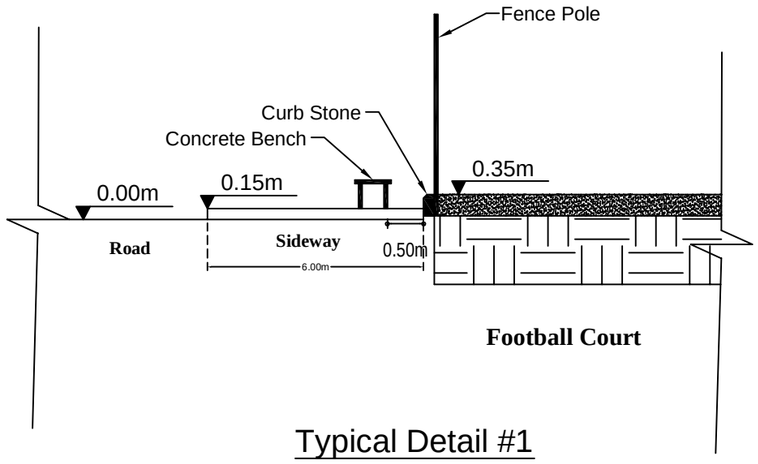

Typical Detail #1

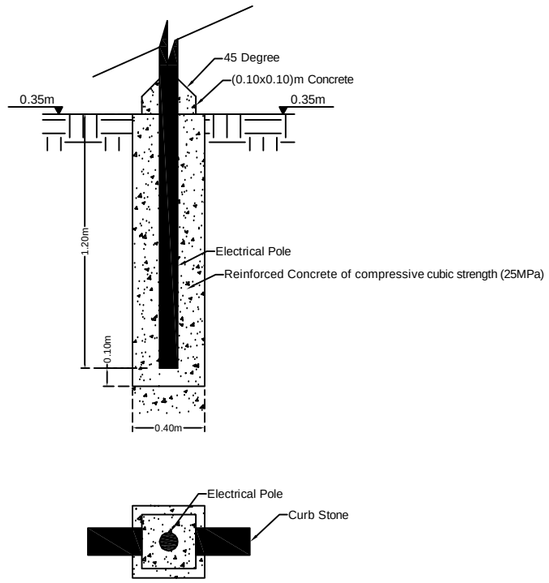

Electrical Pole Foundation (Cross Section & Top View)

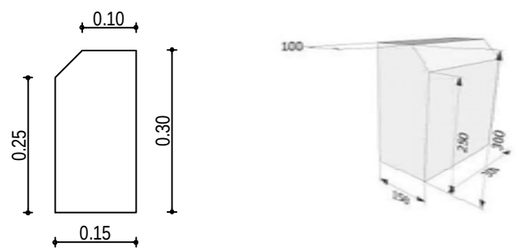

Detail of Curb Stone

Notes:

1) The mentioned finish level of the road (0.00) is the expected final finish level of the asphaltic road which must be obtained from the local council to use it as A Main Reference Bench Mark.

2) The above mentioned Main Reference Bench Mark must be fixed and concreted very well to be as permanent reference till handing over the project officially.

UNITED NATIONS DEVELOPMENT PROGRAMME

PROJECT (NAME & NO.)
Establishment of Mini Playgrounds in Al Dair & Al Nashwah Sub-Districts, Majnoon Area of Basrah, Iraq

DESIGN GROUP
Architectural

Sheet no.

DRWG. TITLE
Typical Floor Cross Sections & Details Layout

DRWG. STATUS

NOT APP.	APP.+COM	APPRVD

DRWG. NO.
T - 20d Revision No. 1

SCALE

DESIGN	DRAWN	CHECKED

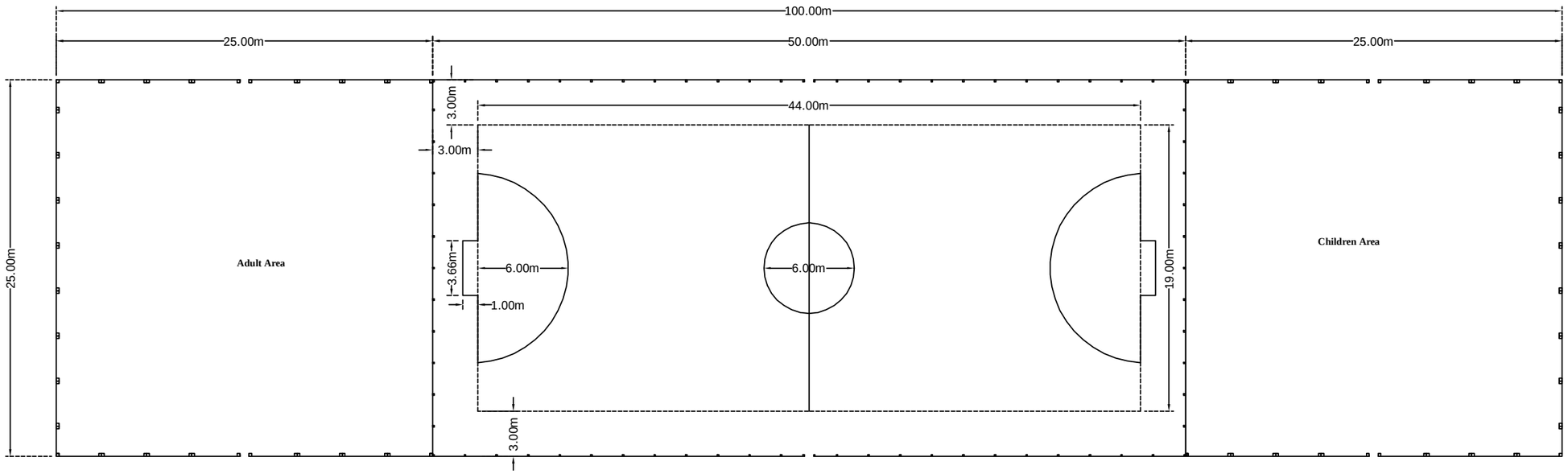

Notes:

1) Width of the lines of football court is (100)mm.

2) The lines of the football court will be implemented by using fine white sand mixed with chalk.

UNITED NATIONS DEVELOPMENT PROGRAMME

PROJECT (NAME & NO.)
Establishment of Mini Playgrounds in Al Dair & Al Nashwah Sub-Districts, Majnoon Area of Basrah, Iraq

DESIGN GROUP
Architectural

Sheet no.

DRWG. TITLE
Typical Mini Football Court's Markings Layout

DRWG. STATUS

NOT APP.	APP.+COM	APPRVD

DRWG. NO.
T - 21 Revision No. 0

SCALE

DESIGN	DRAWN	CHECKED

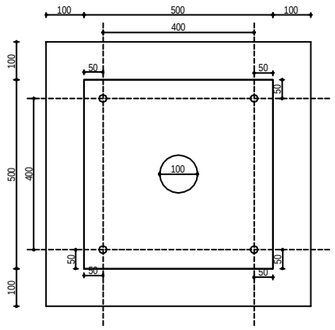

Plan for Reinforced Foundation with Steel Plate

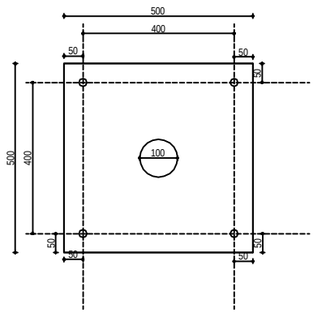

Plan for Steel Plate

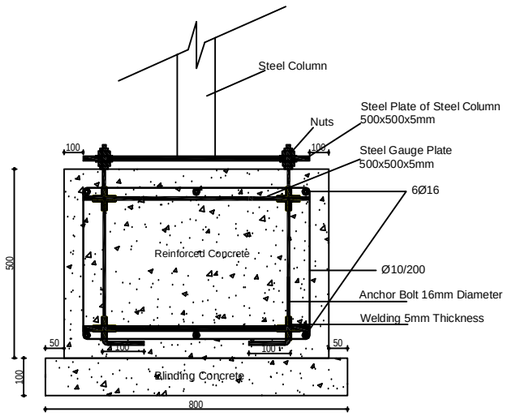

Cross Section for Foundation

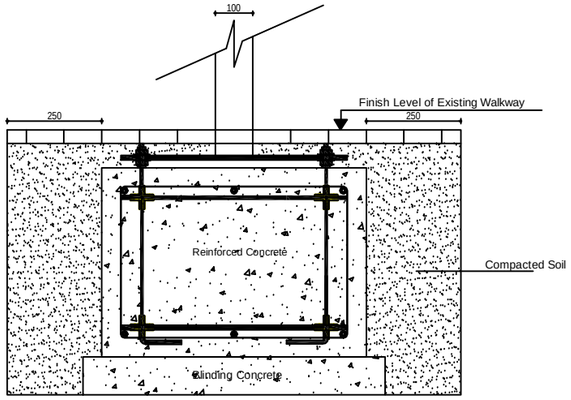

Cross Section Walkway for Memorial Plaque

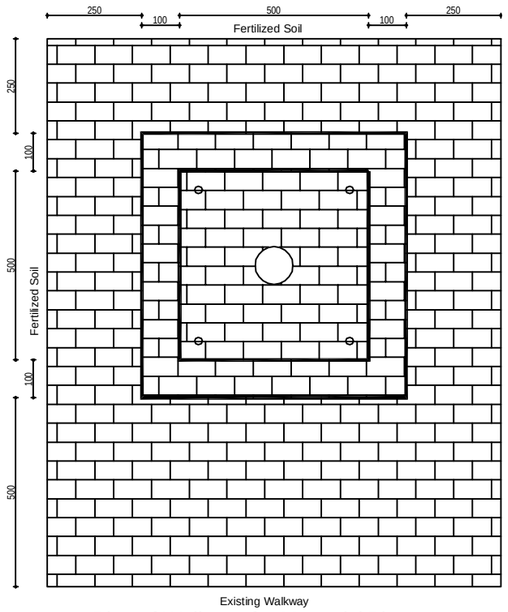

Plan of Walkway for Memorial Plaque

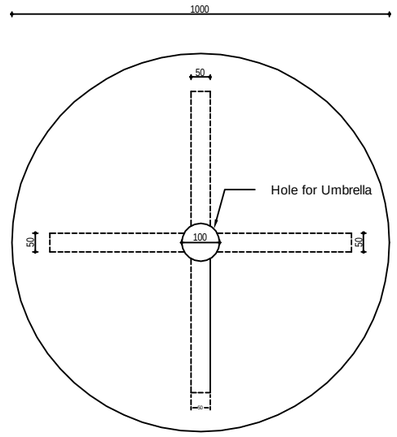

Top View of Concrete Table

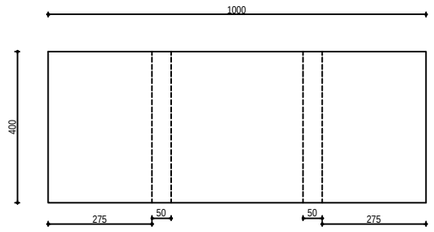

Top View of Concrete Bench

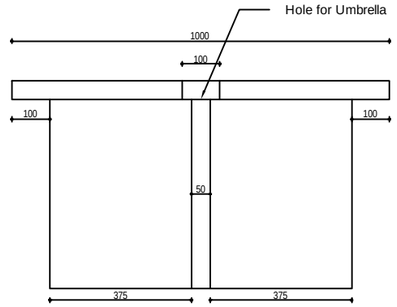

Side View of Concrete Table

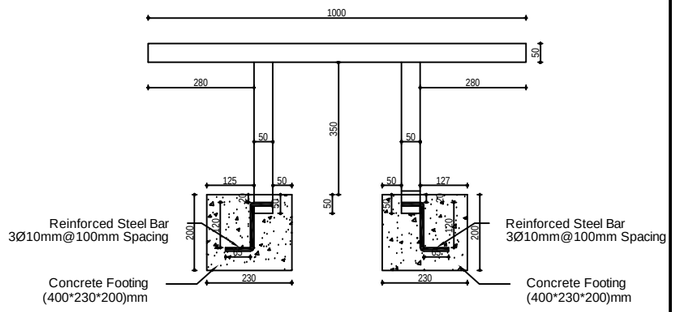

Side View of Concrete Bench

Notes

1. Type V sulphate-resisting cement must be used in all concrete works that will be in contact with the soil.
2. Minimum cement content is 380 kg/m³.
3. Maximum free water / cement ratio is 0.45 by weight.
4. Minimum compressive cubic strength for cocrete = 25MPa and for blinding concrete = 15 MPa
5. Minimum yield stress of reinforcing bars =420MPa.
6. Minimum concrete cover for footing =50mm.
7. If the length of reinforcing bars is not enough, then the minimum overlap splices = 50 times the bar.
8. The steel plate, anchor bolts & nuts must be galvanized and high tension.
9. The number, diameter & distribution of bolts depends on the must be suitable to the equipment's bolts.
10. The hock of the stirrups must be with angle (45) degree.
11. Three layers of asphaltic material at the base and sides of the blinding concrete and footing.
12. Enough curing must be applied to the blinding concrete and footing.
13. The dimensions of the reinforced concrete foundations of the memorial plaque are (700mm length * 700mm width * 500mm depth).
14. All dimensions are in mm.
15. The Height of the anchor bolts must have (100mm) above reinbroed concrete finish level, then its height will be adjusted after putting the nuts.
16. The part of the anchor bolts inside the concrete must be covered with epoxy just few minutes before casting the concrete.
17. Curbstone similar to the existing one will be used for the walkway.
18. Walkway will be constructed same as the existing one.
19. High welding quality (5mm) thickness and (50mm) length in each direction must be done for all connections from all sides between the gauge plates and the anchor bolts.

UNITED NATIONS DEVELOPMENT PROGRAMME

PROJECT (NAME & NO.)
Establishment of Mini Playgrounds in Al Dair & Al Nashwah Sub-Districts, Majnoon Area of Basrah, Iraq

DESIGN GROUP: **Architectural**

Sheet no.

DRWG. TITLE: Typical Structural Details #1 Layout Memorial Plaque, Concrete Tables & Concrete Benches

DRWG. STATUS

MGT. APP. | APP.-CLM | APPRVD

DRWG. NO.: T - 22 Revision No. 0

SCALE

DESIGN | DRAWN | CHECKED

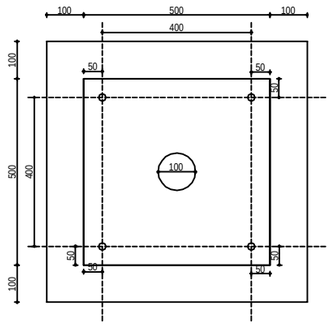

Plan for Reinforced Foundation with Steel Plate

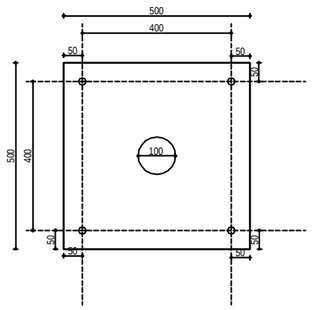

Plan for Steel Plate

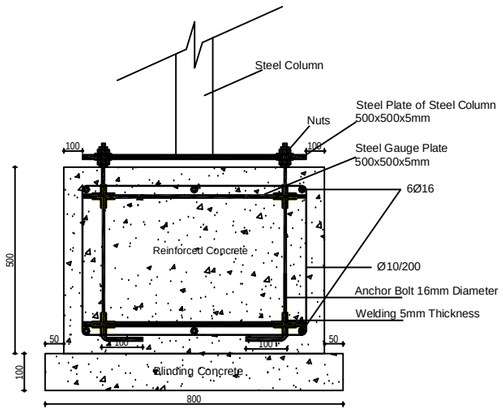

Cross Section for Foundation

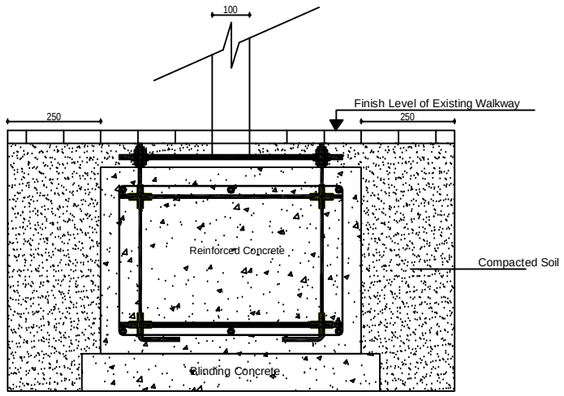

Cross Section Walkway

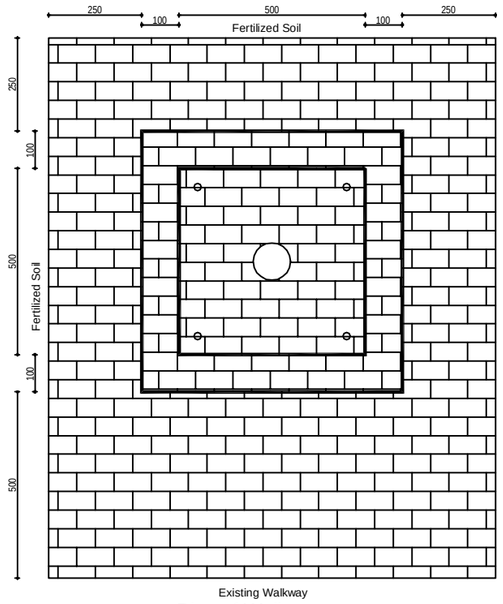

Plan of Walkway

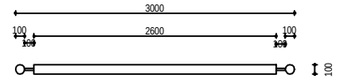

SPONSOR BILLBOARD IN PLAN

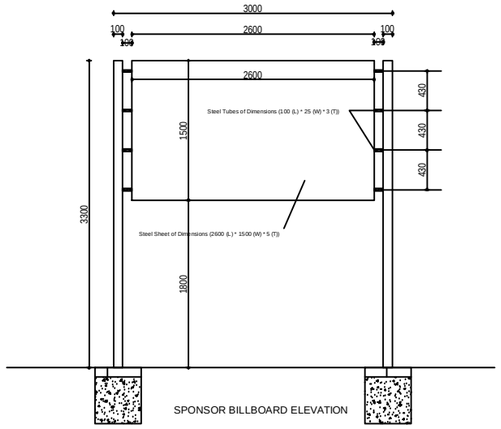

SPONSOR BILLBOARD ELEVATION

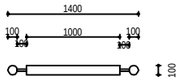

WARNING BILLBOARD IN PLAN

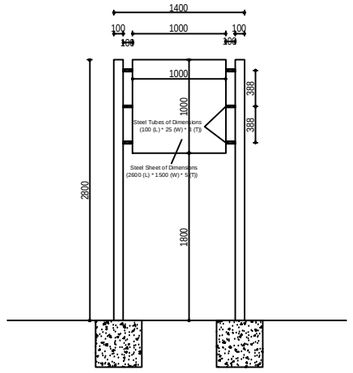

WARNING BOARD

Notes

1. Type V sulphate-resisting cement must be used in all concrete works that will be
2. Minimum cement content is 380 kg/m³.
3. Maximum free water / cement ratio is 0.45 by weight.
4. Minimum compressive cubic strength for concrete = 25MPa and for blinding concrete = 15 MPa
5. Minimum yield stress of reinforcing bars =420MPa.
6. Minimum concrete cover for footing =50mm.
7. If the length of reinforcing bars is not enough, then the minimum overlap splices = 50 times the bar.
8. The steel plate, anchor bolts & nuts must be galvanized and high tension.
9. The number, diameter & distribution of bolts depends on the must be suitable to the equipment's bolts.
10. The hook of the stirrups must be with angle (45) degree.
11. Three layers of asphaltic material at the base and sides of the blinding concrete and footing.
12. Enough curing must be applied to the blinding concrete and footing.
13. The dimensions of the reinforced concrete foundations are (700mm length * 700mm width * 500mm depth).
14. All dimensions are in mm.
15. The Height of the anchor bolts must have (100mm) above reinforced concrete finish level, then its height will be adjusted after putting the nuts.
16. The paint of the anchor bolts inside the concrete must be covered with epoxy just few minutes before casting the concrete.
17. High welding quality (5mm) thickness and (50mm) length in each direction must be done for all connections from all sides between the gauge plates and the anchor bolts.
18. High welding quality (5mm) thickness in all each direction must be done from all sides between the steel tubes connections, the steel frame and the steel sheet of the board.
19. Three layers of paint must be applied to the steel, first layer is anti-corrosion paint, the second and third layers are from the final paint finish which must be external type.
20. Curbstone similar to the existing one will be used for the walkway.
21. Walkway will be constructed same as the existing one.

UNITED NATIONS
DEVELOPMENT
PROGRAMME

PROJECT (NAME & NO.)
Establishment of Mini Playgrounds in Al Dair & Al Nashwah Sub-Districts, Majnoon Area of Basrah, Iraq

DESIGN GROUP: **Architectural**

Sheet no.

DRWG. TITLE
Typical Structural Details #2 Layout
Sponsor Billboard & Warning Billboard

DRWG. STATUS: NOT APP. | APP.+COM | APPRVD

DRWG. NO.
T - 23 Revision No. 0

SCALE

DESIGN | DRAWN | CHECKED

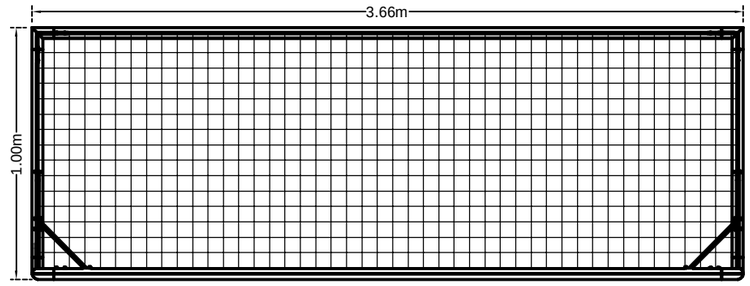

TOP
VIEW

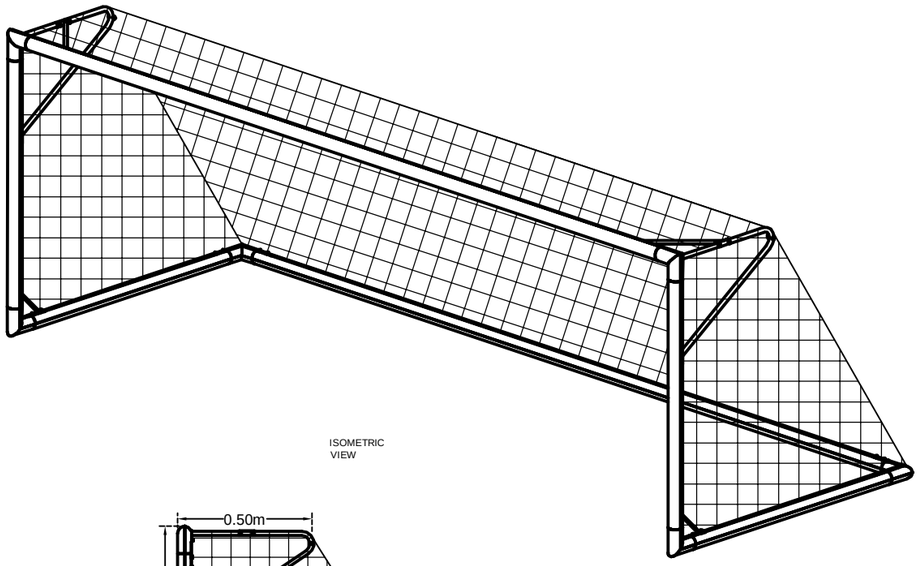

ISOMETRIC
VIEW

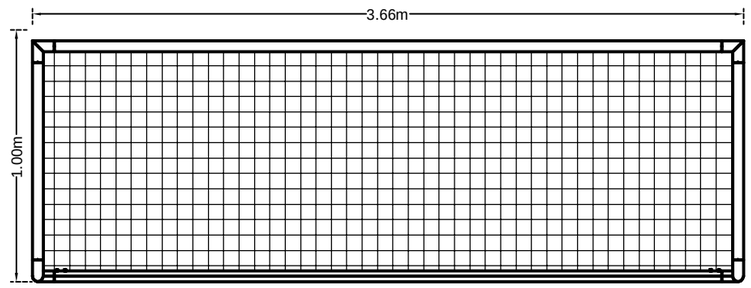

FRONT
VIEW

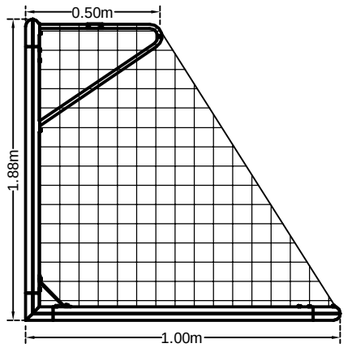

RIGHT
VIEW

Notes

1. Type V sulphate-resisting cement must be used in all concrete works that will be in contact with the soil.
2. Minimum cement content is 380 kg/m³.
3. Maximum free water / cement ratio is 0.45 by weight.
4. Minimum compressive cubic strength for cocrete = 25MPa and for blinding concrete = 15 MPa
5. Minimum yield stress of reinforcing bars =420MPa.
6. Minimum concrete cover for footing =50mm.
7. If the length of reinforcing bars is not enough, then the minimum overlap spikes = 50 times the bar.
8. The steel plate, anchor bolts & nuts must be galvanized and high tension.
9. The hock of the stirrups must be with angle (45) degree.
10. Three layers of asphaltic material at the base and sides of the blinding concrete and footing.
11. Enough curing must be applied to the blinding concrete and footing.
12. The dimensions of the reinforced concrete foundations are (500mm length * 500mm width * 500mm depth).
13. The Height of the anchor bolts must have (150mm) above reinforced concrete finish level, then its height will be adjusted after putting the nuts.
14. The part of the anchor bolts inside the concrete must be covered with epoxy just few minutes before casting the concrete.
15. High welding quality (5mm) thickness and (50mm) length in each direction must be done for all connections from all sides between the gauge plates, the anchor bolts and the steel pipes of the football goal.
16. A rubber cover will be used to cover the bolts and nuts to prevent injuries.
17. The steel pipes of the football goal is of diameter 100mm and thickness 5mm. These pipes must be painted three layers. First paint layer is anti corrosion paint, the second and third paint layers are of the final paint color. The used paint must be outdoor type and the method of painting must be thermal method.

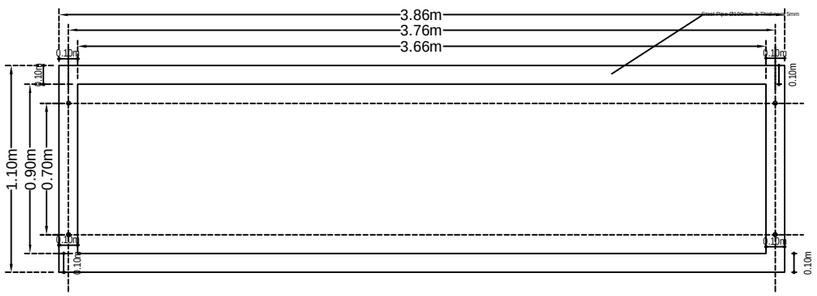

Plan for Steel Anchor Bolts

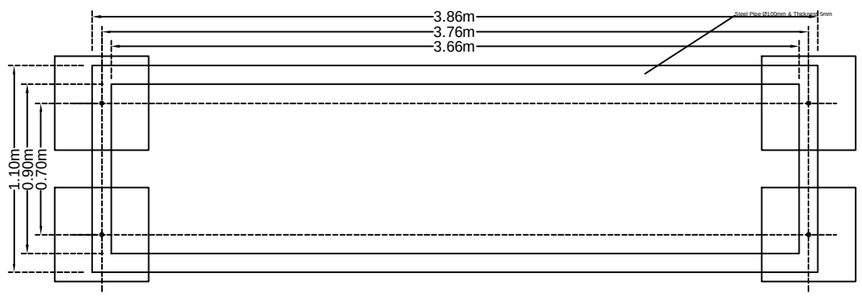

Plan for Reinforced Footings

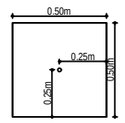

Plan for Reinforced Footing with Steel Anchor Bolt

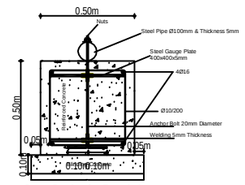

Cross Section for Foundation

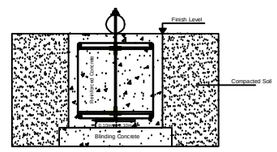

Cross Section for Foundation

UNITED NATIONS
DEVELOPMENT
PROGRAMME

PROJECT (NAME & NO)
Establishment of Mini Playgrounds in Al Dair & Al Nashwah Sub-Districts, Majnoon Area of Basrah, Iraq

DESIGN GROUP
Architectural

Sheet no.

DRWG. TITLE
Typical Structural Details #3 Layout
Football Goal Details

DRWG. STATUS
NOT APP. | APP. <CLIE | APPROVD

DRWG. NO.
T - 24 Revision No. 0

SCALE

DESIGN | DRAWN | CHECKED

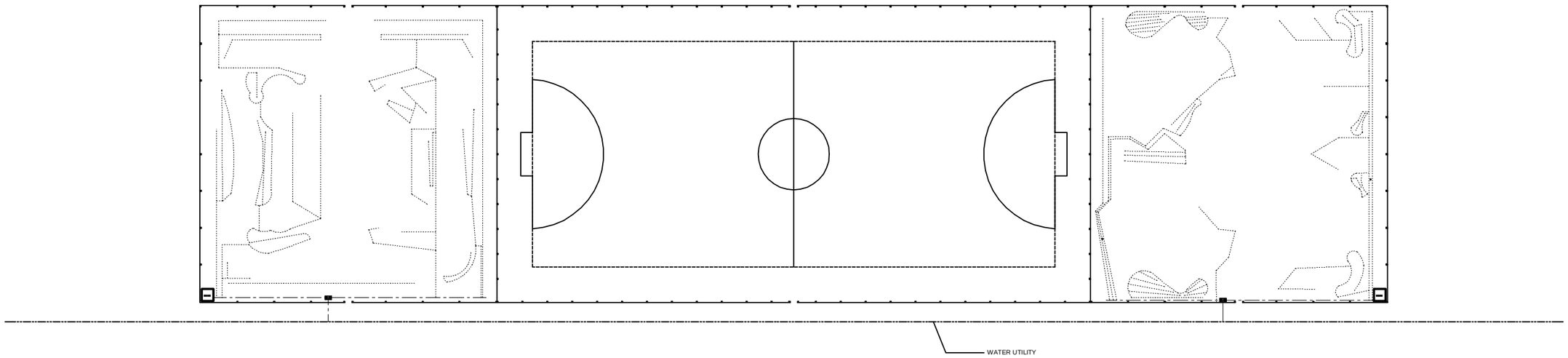

Irrigation Legend

Symbol	Item Description	Unit	Estimated Qty.
	P.E pipe 16mm	Meter	1300
	P.E pipe 32mm	Meter	45
	Water Utility	Meter	N/A
	Drip soloneiod valve	No.	2
water tank	water tank	No.	2

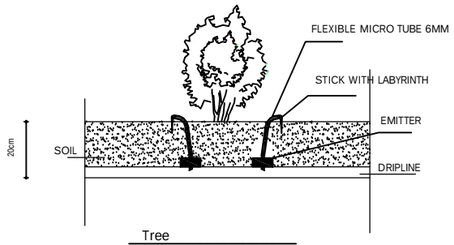

Tree
2 Drip X 8L/H=16L/H

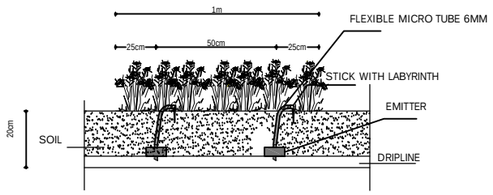

Shrub
1 Drip X 4L/H=4L/H EVERY 50CM

UNITED NATIONS DEVELOPMENT PROGRAMME

PROJECT (NAME & NO.)
Establishment of Mini Playgrounds in Al Dair & Al Nashwah Sub-Districts, Majnoon Area of Basrah, Iraq

DESIGN GROUP
Architectural

Sheet no.

DRWG. TITLE
Typical Irrigation Plan & Details Layout

DRWG. STATUS
NOT APP. | APP. CLIM | APPROVED

DRWG. NO.
T - 25 Revision No. 0

SCALE

DESIGN | DRAWN | CHECKED

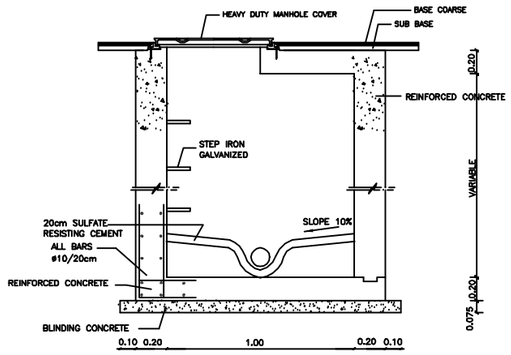

SECTION B–B

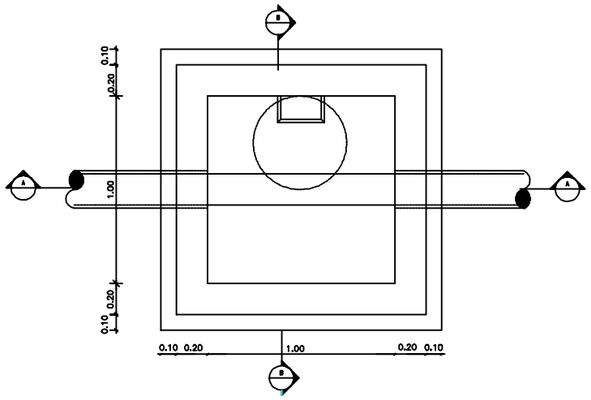

SEWAGE MANHOLE # 2 & 3 PLAN

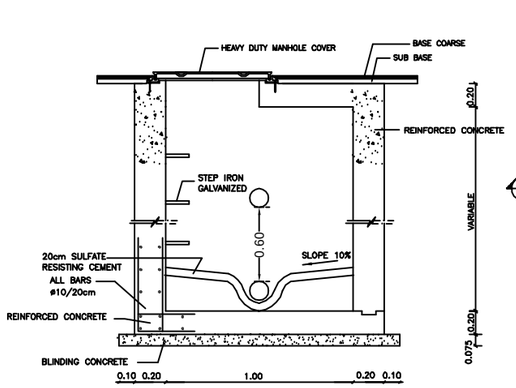

SECTION B–B

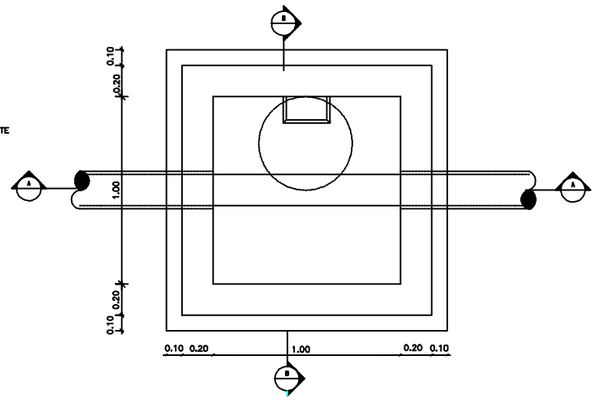

SEWAGE MANHOLE # 1 PLAN

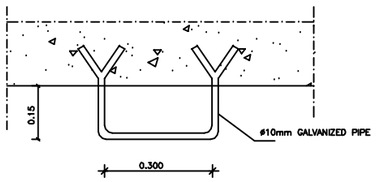

STEP DETAIL (B)

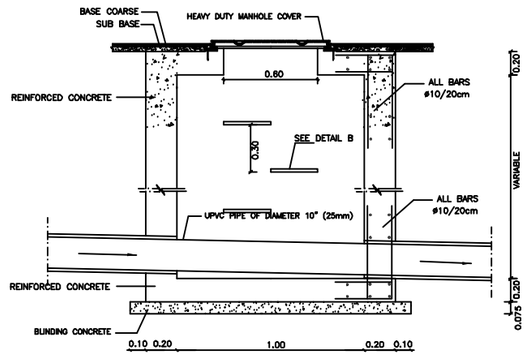

SECTION A–A

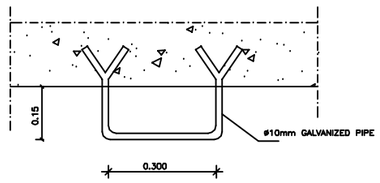

STEP DETAIL (B)

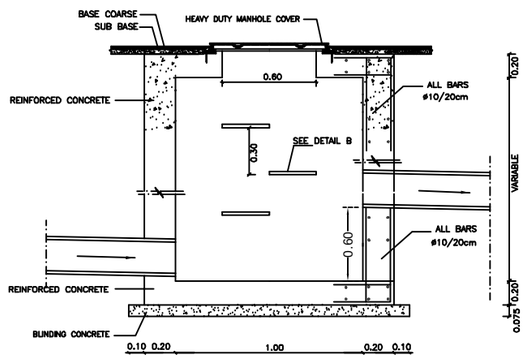

SECTION A–A

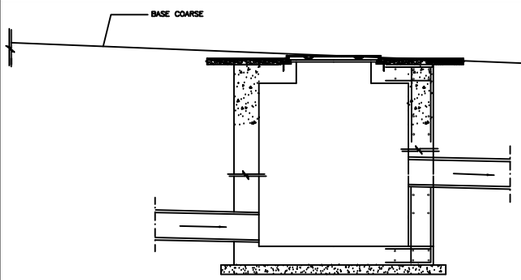

MANHOLE #1

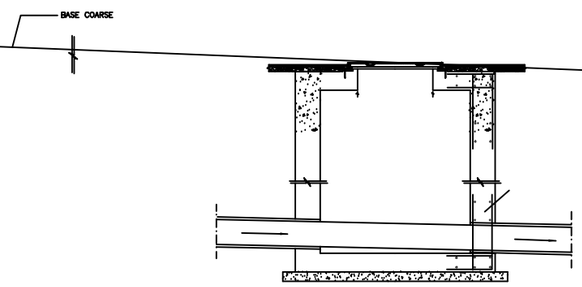

MANHOLE #2

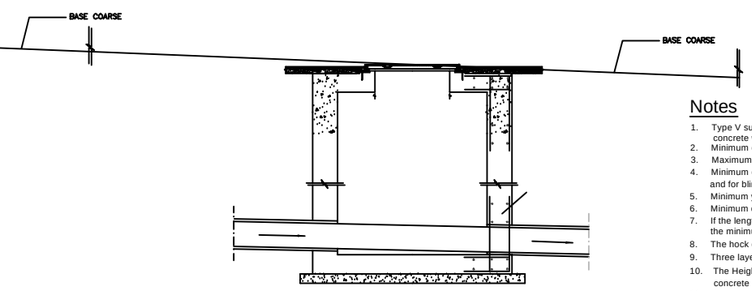

MANHOLE #3

PROPOSED SEWERAGE PIPELINE

Notes

1. Type V sulphate-resisting cement must be used in all concrete works that will be
2. Minimum cement content is 380 kg/m³.
3. Maximum free water / cement ratio is 0.45 by weight.
4. Minimum compressive cubic strength for cocrete = 25MPa and for blinding concrete = 15 MPa
5. Minimum yield stress of reinforcing bars =420MPa.
6. Minimum concrete cover for footing =50mm.
7. If the length of reinforcing bars is not enough, then the minimum overlap splices = 50 times the bar.
8. The hock of the stirrups must be with angle (45) degree.
9. Three layers of asphaltic material at the base and sides of the blinding
10. The Height of the anchor bolts must have (100mm) above reinforced concrete and footing.
11. Enough curing must be applied to the blinding concrete and footing.
12. All dimensions are in meter.
13. The minimum slope of the UPVC pipes is 1%.
14. The minimum level's difference between inlet and outlet is (5)cm.
15. If necessary, and according to the actual levels, inverse (Y) can be used in drop manholes provided that the drop not exceed (60)cm.
15. The embankment below the UPVC pipe must be two layers of thickness (20)cm of sub-base class (B) and compaction not less than (98%).
16. The route of the pipeline must be backfilled till the surrounding finish level.
17. Special warning tape must be installed at the middle depth of the backlilling layer over the pipeline route.

UNITED NATIONS
DEVELOPMENT
PROGRAMME

PROJECT (NAME & NO.)
Establishment of Mini Playgrounds in Al Dair & Al Nashwah Sub-Districts, Majnoon Area of Basrah, Iraq

DESIGN GROUP: **Architectural**

Sheet no.

DRWG. TITLE: Typical Sewerage Details

DRWG. STATUS: NOT APP. | APP.+COM | APPROVD

DRWG. NO.: T - 26 Revision No. 0

SCALE

DESIGN | DRAWN | CHECKED

Legend:

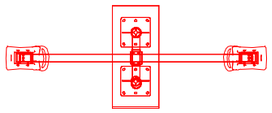
Seesaw

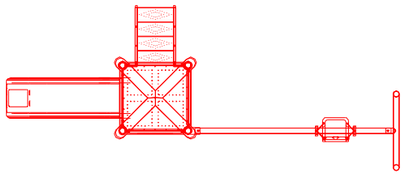
Play Tower (Slide & Swing)

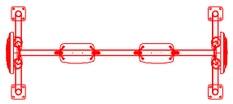
Traditional Classic Swing

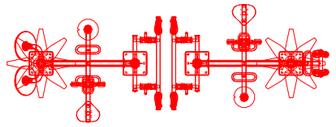
Mini Fitness Set for Children

Concrete Bench

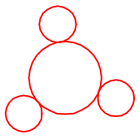
Concrete Table & Benches

Waist Stretching Equipment

Cycle & Step Equipment

Leg Pushing/Strengthening Equipment

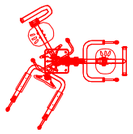
Body Building Equipment

Waste Bin

Sponsor Billboard

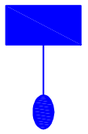
Solar Lighting Pole

Equipment Safety Zone

UNITED NATIONS DEVELOPMENT PROGRAMME

PROJECT (NAME & NO.)
Establishment of Mini Playgrounds in Al Dair & Al Nashwah Sub-Districts, Majnoon Area of Basrah, Iraq

DESIGN GROUP
Architectural

Sheet no.

DRWG. TITLE
Typical Equipment List

DRWG. STATUS

NOT APP.	APP.+COM	APPRVD

DRWG. NO.
T - 27 Revision No. 0

SCALE

DESIGN	DRAWN	CHECKED

T - 28 Children Playground Area (Age 1 - 6 Years) 3D Photos

Revision No. 0

T - 29 Fitness Area (Age 7+ Years) 3D Photos

Revision No. 0

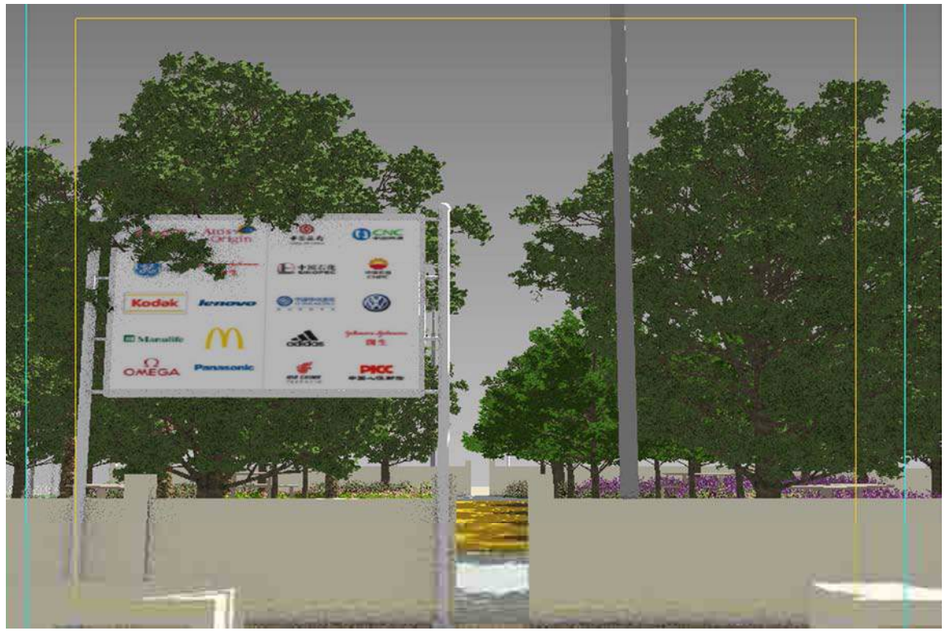
Kodak
lenovo
OMEGA
Panasonic