Empowered lives.
Resilient nations.

INVITATION TO BID

Implement Construction Works

(ITB/GLED/19/2015)

UNDP is the UN's global development network, advocating for change and connecting countries to knowledge, experience and resources to help people build a better life. We are on the ground in 166 countries, working with them on their own solutions to global and national development challenges. The Governance for Local Economic Development Programme (GLED) is UNDP Sri Lanka's new flagship programme for strengthening governance capacities at District, Divisional and Provincial levels and improving socio-economic opportunities in vulnerable regions in the country.

GLED will focus on increasing the capacity of sub-national level governance institutions, civil society, the private sector and communities in order to foster access to enhanced public sector service delivery, socio-economic development, and social cohesion across the identified lagging regions, while securing the transition from recovery to development in the North and East. The Programme will help communities increase their production and "value-added" capacities and make use of productive infrastructure, new technologies and knowledge. Strengthened engagement with the private sector will increase the sustainability of livelihoods initiatives. Given the sub-national variations in Sri Lanka's human development index, GLED offers a comprehensive and targeted response.

To this effect, UNDP in Sri Lanka invites eligible National and or International Civil Work contractors meeting the respective minimum level of ICTAD registration in Building to submit Bids for the following LOT on an ***urgent basis***.

Lot Number	Description of Civil Works	Pre-Bid Meeting/Site Inspection	Minimum ICTAD Registration and Experience	Refundable Bid Security (LKR)
Lot 1:	Renovation of Ice Cube Making Unit in Kaluwankerny, Batticaloa BAT/SDDP/87393/005/07	Inspection time from 9 am to 12 noon 23rd Nov 2015 Pre-bid meeting at 2 pm 23rd Nov 2015 UNDP GLED Project Office, 31/A, Lady Manning Drive, Batticaloa	C7 Building	45,000.00

202-204, Bauddhaloka Mawatha, Colombo 7, Sri Lanka • P.O. Box 1505
Telephone: 94 (1) 2 580691-8 Fax: 94 (1) 2590038 • email: procurement.lk@undp.org

Eligible Civil Work Contractors are encouraged to bid. The bidders, must show proof of resources, financial capacity through the required level of ICTAD registration and similar projects successfully undertaken for the cumulative bid price. UNDP will ***NOT*** accept partial bids within the LOT and such bids will be rejected.

The Technical Drawings, Bill of Quantity (BOQ), Scope of Works and all solicitation bid documents can be collected free of charge from the above UNDP Project Office or from the below address from **15th November– 3rd December 2015 or downloaded free of charge from www.lk.undp.org> Operations > Procurement**. All bids must be clearly marked with the respective **ITB Ref Number** on the top left corner of the envelope.

The *deadline* for submission of the bids is 2.00pm 3rd December 2015 Sri Lanka time and all bids must be sealed and delivered to the address below. ***All late*** offers will be rejected and returned to the bidder unopened. The bids will be opened immediately after the closure of the submission time and bidders are encouraged to participate in the bid opening.

Head of Procurement/Administration
United Nations Development Programme (UNDP)
202-204 Bauddhaloka Mawatha
Colombo 07, Sri Lanka.

UNDP reserves the right to accept or reject any bid. The procurement process will be governed by the rules and regulations of the United Nations Development Programme (UNDP).

INVITATION TO BID

Implement Civil Construction Works

ITB/GLED/19/2015

SRI LANKA

United Nations Development Programme

November, 2015

Section 1. Letter of Invitation

SRI LANKA
November 15, 2015

ITB/GLED/19/2015

Dear M/S Bidder

The United Nations Development Programme (UNDP) hereby invites you to submit a Bid to this Invitation to Bid (ITB) for the above-referenced subject.

This ITB includes the following documents:

Section 1 – This Letter of Invitation
Section 2 – Instructions to Bidders (including Data Sheet)
Section 3 – Schedule of Requirements and Technical Specifications
Section 4 – Bid Submission Form
Section 5 – Documents Establishing the Eligibility and Qualifications of the Bidder
Section 6 – Technical Bid Form
Section 7 – Price Schedule Form
Section 8 – Form for Bid Security *[delete if not required]*
Section 9 – Form for Performance Security *[delete if not required]*
Section 10 – Form for Advanced Payment Guarantee [*delete if not required]*
Section 11 – Contract to be signed, including General Terms and Conditions

Your offer, comprising of a Technical Bid and Price Schedule, in separate sealed envelopes, should be submitted in accordance with Section 2.

You are kindly requested to submit an acknowledgment letter to UNDP to the following address:

United Nations Development Programme
Head of Procurement/Administration
Procurement.lk@undp.org

If you have received this ITB through a direct invitation by UNDP, transferring this invitation to another firm requires notifying UNDP accordingly.

Should you require any clarification, kindly communicate with the contact person identified in the attached Data Sheet as the focal point for queries on this ITB.

UNDP looks forward to receiving your Bid and thanks you in advance for your interest in UNDP procurement opportunities.

Yours sincerely,

Rohana Dissanayake, Head of Procurement

Section 2: Instruction to Bidders[1]

Definitions

a) *"Bid"* refers to the Bidder's response to the Invitation to Bid, including the Bid Submission Form, Technical Bid and Price Schedule and all other documentation attached thereto as required by the ITB.

b) *"Bidder"* refers to any legal entity that may submit, or has submitted, a Bid for the supply of goods and provision of related services requested by UNDP.

c) *"Contract"* refers to the legal instrument that will be signed by and between the UNDP and the successful Bidder, all the attached documents thereto, including the General Terms and Conditions (GTC) and the Appendices.

d) "*Country"* refers to the country indicated in the Data Sheet.

e) *"Data Sheet"* refers to such part of the Instructions to Bidders used to reflect conditions of the tendering process that are specific for the requirements of the ITB.

f) *"Day"* refers to calendar day.

g) *"Goods"* refer to any tangible product, commodity, article, material, wares, equipment, assets or merchandise that UNDP requires under this ITB.

h) *"Government"* refers to the Government of the country where the goods and related services provided/rendered specified under the Contract will be delivered or undertaken.

i) *"Instructions to Bidders"* refers to the complete set of documents which provides Bidders with all information needed and procedures to be followed in the course of preparing their Bid

j) *"ITB"* refers to the Invitation to Bid consisting of instructions and references prepared by UNDP for purposes of selecting the best supplier or service provider to fulfil the requirement indicated in the Schedule of Requirements and Technical Specifications.

k) *"LOI"* (Section 1 of the ITB) refers to the Letter of Invitation sent by UNDP to Bidders.

l) *"Material Deviation"* refers to any contents or characteristics of the bid that is significantly different from an essential aspect or requirement of the ITB, and (i) substantially alters the scope and quality of the requirements; (ii) limits the rights of UNDP and/or the obligations of the offeror; and (iii) adversely impacts the fairness and principles of the procurement process, such as those that compromise the competitive position of other offerors.

[1] *Note: this Section 2 - Instructions to Bidders shall not be modified in any way.* ***Any necessary changes to address specific country and project information shall be introduced only through the Data Sheet.***

m) *"Schedule of Requirements and Technical Specifications"* refers to the document included in this ITB as Section 3 which lists the goods required by UNDP, their specifications, the related services, activities, tasks to be performed, and other information pertinent to UNDP's receipt and acceptance of the goods.

n) *"Services"* refers to the entire scope of tasks related or ancillary to the completion or delivery of the goods required by UNDP under the ITB.

o) "*Supplemental Information to the ITB"* refers to a written communication issued by UNDP to prospective Bidders containing clarifications, responses to queries received from prospective Bidders, or changes to be made in the ITB, at any time after the release of the ITB but before the deadline for the submission of Bid.

A. GENERAL

1. UNDP hereby solicits Bids as a response to this Invitation to Bid (ITB). Bidders must strictly adhere to all the requirements of this ITB. No changes, substitutions or other alterations to the rules and provisions stipulated in this ITB may be made or assumed unless it is instructed or approved in writing by UNDP in the form of Supplemental Information to the ITB.

2. Submission of a Bid shall be deemed as an acknowledgement by the Bidder that all obligations stipulated by this ITB will be met and, unless specified otherwise, the Bidder has read, understood and agreed to all the instructions in this ITB.

3. Any Bid submitted will be regarded as an offer by the Bidder and does not constitute or imply the acceptance of any Bid by UNDP. UNDP is under no obligation to award a contract to any Bidder as a result of this ITB.

4. UNDP implements a policy of zero tolerance on proscribed practices, including fraud, corruption, collusion, unethical practices, and obstruction. UNDP is committed to preventing, identifying and addressing all acts of fraud and corrupt practices against UNDP as well as third parties involved in UNDP activities. (See http://www.undp.org/about/transparencydocs/UNDP_Anti_Fraud_Policy_English_FINAL_june_2011.pdf and http://www.undp.org/content/undp/en/home/operations/procurement/procurement_protest/ for full description of the policies)

5. In responding to this ITB, UNDP requires all Bidders to conduct themselves in a professional, objective and impartial manner, and they must at all times hold UNDP's interests paramount. Bidders must strictly avoid conflicts with other assignments or their own interests, and act without consideration for future work. All Bidders found to have a conflict of interest shall be disqualified. Without limitation on the generality of the above, Bidders, and any of their affiliates, shall be considered to have a conflict of interest with one or more parties in this solicitation process, if they:

5.1 Are, or have been associated in the past, with a firm or any of its affiliates which have been engaged UNDP to provide services for the preparation of the design, Schedule of Requirements and Technical Specifications, cost analysis/estimation, and other documents to be used for the procurement of the goods and related services in this selection process;

5.2 Were involved in the preparation and/or design of the programme/project related to the goods and related services requested under this ITB; or

5.3 Are found to be in conflict for any other reason, as may be established by, or at the discretion of, UNDP.

In the event of any uncertainty in the interpretation of what is potentially a conflict of interest, Bidders must disclose the condition to UNDP and seek UNDP's confirmation on whether or not such conflict exists.

6. Similarly, the following must be disclosed in the Bid:

6.1 Bidders who are owners, part-owners, officers, directors, controlling shareholders, or key personnel who are family of UNDP staff involved in the procurement functions and/or the Government of the country or any Implementing Partner receiving the goods and related services under this ITB; and

6.4 Others that could potentially lead to actual or perceived conflict of interest, collusion or unfair competition practices.

Failure of such disclosure may result in the rejection of the Bid.

7. The eligibility of Bidders that are wholly or partly owned by the Government shall be subject to UNDP's further evaluation and review of various factors such as being registered as an independent entity, the extent of Government ownership/share, receipt of subsidies, mandate, access to information in relation to this ITB, and others that may lead to undue advantage against other Bidders, and the eventual rejection of the Bid.

8. All Bidders must adhere to the UNDP Supplier Code of Conduct, which may be found at this link: http://web.ng.undp.org/procurement/undp-supplier-code-of-conduct.pdf

B. CONTENTS OF BID

9. Sections of Bid

Bidders are required to complete, sign and submit the following documents:

9.1 Bid Submission Cover Letter Form (see ITB Section 4);

9.2 Documents Establishing the Eligibility and Qualifications of the Bidder (see ITB Section 5);

9.3 Technical Bid (see prescribed form in ITB Section 6);

9.4 Price Schedule (see prescribed form in ITB Section 7);

9.5 Bid Security, if applicable (if required and as stated in the DS nos. 9-11, see prescribed Form in ITB Section 8);

9.6 Any attachments and/or appendices to the Bid (including all those specified under the **Data Sheet**)

10. Clarification of Bid

10.1 Bidders may request clarification of any of the ITB documents no later than the number of days indicated in the **Data Sheet** (DS no. 16) prior to the Bid submission date. Any request for clarification must be sent in writing via courier or through electronic means to the UNDP address indicated in the **Data Sheet** (DS no. 17). UNDP will respond in writing, transmitted by electronic means and will transmit copies of the response (including an explanation of the query but without identifying the source of inquiry) to all Bidders who have provided confirmation of their intention to submit a Bid.

10.2 UNDP shall endeavour to provide such responses to clarifications in an expeditious manner, but any delay in such response shall not cause an obligation on the part of UNDP to extend the submission date of the Bid, unless UNDP deems that such an extension is justified and necessary.

11. Amendment of Bid

11.1 At any time prior to the deadline for submission of Bid, UNDP may for any reason, such as in response to a clarification requested by a Bidder, modify the ITB in the form of a Supplemental Information to the ITB. All prospective Bidders will be notified in writing of all changes/amendments and additional instructions through Supplemental Information to the ITB and through the method specified in the **Data Sheet** (DS No. 18).

11.2 In order to afford prospective Bidders reasonable time to consider the amendments in preparing their Bid, UNDP may, at its discretion, extend the deadline for submission of Bid, if the nature of the amendment to the ITB justifies such an extension.

C. PREPARATION OF BID

12. Cost

The Bidder shall bear any and all costs related to the preparation and/or submission of the Bid, regardless of whether its Bid was selected or not. UNDP shall in no case be responsible or liable for those costs, regardless of the conduct or outcome of the procurement process.

13. Language

The Bid, as well as any and all related correspondence exchanged by the Bidder and UNDP, shall be written in the language (s) specified in the **Data Sheet** (DS No. 4). Any printed literature furnished by the Bidder written in a language other than the language indicated in the **Data Sheet**, must be accompanied by a translation in the preferred language indicated in the **Data Sheet**. For purposes of interpretation of the Bid, and in the event of discrepancy or inconsistency in meaning, the version translated into the preferred language shall govern. Upon conclusion of a contract, the language of the contract shall govern the relationship between the contractor and UNDP.

14. Bid Submission Form

The Bidder shall submit the Bid Submission Form using the form provided in Section 4 of this ITB.

15. Technical Bid Format and Content

Unless otherwise stated in the **Data Sheet** (DS no. 28), the Bidder shall structure the Technical Bid as follows:

15.1 Expertise of Firm/Organization – this section should provide details regarding management structure of the organization, organizational capability/resources, and experience of organization/firm, the list of projects/contracts (both completed and on-going, both domestic and international) which are related or similar in nature to the requirements of the ITB, manufacturing capacity of plant if Bidder is a manufacturer, authorization from the manufacturer of the goods if Bidder is not a manufacturer, and proof of financial stability and adequacy of resources to complete the delivery of goods and provision of related services required by the ITB (see ITB Clause 18 and DS No. 26 for further details). The same shall apply to any other entity participating in the ITB as a Joint Venture or Consortium.

15.2 Technical Specifications and Implementation Plan – this section should demonstrate the Bidder's response to the Schedule of Requirements and Technical Specifications by identifying the specific components proposed; how each of the requirements shall be met point by point; providing a detailed specification and description of the goods required, plans and drawings where needed; the essential performance characteristics, identifying the works/portions of the work that will be subcontracted; a list of the major subcontractors, and demonstrating how the bid meets or exceeds the requirements, while ensuring appropriateness of the bid to the local conditions and the rest of the project operating environment during the entire life of the goods provided. Details of technical bid must be laid out and supported by an Implementation Timetable, including Transportation and Delivery Schedule where needed, that is within the duration of the contract as specified in the **Data Sheet** (DS nos. 29 and 30).

Bidders must be fully aware that the goods and related services that UNDP require may be transferred, immediately or eventually, by UNDP to the Government partners, or to an entity nominated by the latter, in accordance with UNDP's policies and procedures. All bidders are therefore required to submit the following in their bids:

a) A statement of whether any import or export licences are required in respect of the goods to be purchased or services to be rendered, including any restrictions in the country of origin, use or dual use nature of the goods or services, including any disposition to end users;
b) Confirmation that the Bidder has obtained license of this nature in the past, and have an expectation of obtaining all the necessary licenses, should their bid be rendered the most responsive; and
c) Complete documentation, information and declaration of any goods classified or may be classified as "Dangerous Goods".

15.3 Management Structure and Key Personnel – This section should include the

comprehensive curriculum vitae (CVs) of key personnel that will be assigned to support the implementation of the technical bid, clearly defining their roles and responsibilities. CVs should establish competence and demonstrate qualifications in areas relevant to the requirements of this ITB.

In complying with this section, the Bidder assures and confirms to UNDP that the personnel being nominated are available to fulfil the demands of the Contract during its stated full term. If any of the key personnel later becomes unavailable, except for unavoidable reasons such as death or medical incapacity, among other possibilities, UNDP reserves the right to render the Bid non-responsive. Any deliberate substitution of personnel arising from unavoidable reasons, including delay in the implementation of the project of programme through no fault of the Bidder, shall be made only with UNDP's acceptance of the justification for substitution, and UNDP's approval of the qualification of the replacement who shall be either of equal or superior credentials as the one being replaced.

15.4 Where the **Data Sheet** requires the submission of the Bid Security, the Bid Security shall be included along with the Technical Bid. The Bid Security may be forfeited by UNDP, and reject the Bid, in the event of any or any combination of the following conditions:

a) If the Bidder withdraws its offer during the period of the Bid Validity specified in the **Data Sheet** (DS no. 11), or;
b) If the Bid Security amount is found to be less than what is required by UNDP as indicated in the **Data Sheet** (DS no. 9), or;
c) In the case the successful Bidder fails:

   i. to sign the Contract after UNDP has awarded it;
   ii. to comply with UNDP's variation of requirement, as per ITB Clause 35; or
   iii. to furnish Performance Security, insurances, or other documents that UNDP may require as a condition to rendering effective the contract that may be awarded to the Bidder.

16. Price Schedule

The Price Schedule shall be prepared using the attached standard form (Section 7). It shall list all major cost components associated with the goods and related services, and the detailed breakdown of such costs. All goods and services described in the Technical Bid must be priced separately on a one-to-one correspondence. Any output and activities described in the Technical Bid but not priced in the Price Schedule, shall be assumed to be included in the prices of the items or activities, as well as in the final total price of the bid.

17. Currencies

All prices shall be quoted in the currency indicated in the **Data Sheet** (DS no. 15). However, where Bids are quoted in different currencies, for the purposes of comparison of all Bid:

17.1 UNDP will convert the currency quoted in the Bid into the UNDP preferred currency, in accordance with the prevailing UN operational rate of exchange on the last day of submission of Bid; and

17.2 In the event that the Bid found to be the most responsive to the ITB requirement is quoted in another currency different from the preferred currency as per **Data Sheet** (DS no. 15), then UNDP shall reserve the right to award the contract in the currency of UNDP's preference, using the conversion method specified above.

18. Documents Establishing the Eligibility and Qualifications of the Bidder

18.1 The Bidder shall furnish documentary evidence of its status as an eligible and qualified vendor, using the forms provided under Section 5, Bidder Information Forms. In order to award a contract to a Bidder, its qualifications must be documented to UNDP's satisfactions. These include, but are not limited to the following:

a) That, in the case of a Bidder offering to supply goods under the Contract which the Bidder did not manufacture or otherwise produce, the Bidder has been duly authorized by the goods' manufacturer or producer to supply the goods in the country of final destination;
b) That the Bidder has the financial, technical, and production capability necessary to perform the Contract; and
c) That, to the best of the Bidder's knowledge, it is not included in the UN 1267 List or the UN Ineligibility List, nor in any and all of UNDP's list of suspended and removed vendors.

18.2 Bids submitted by two (2) or more Bidders shall all be rejected by UNDP if they are found to have <u>any</u> of the following:

a) they have at least one controlling partner, director or shareholder in common; or
b) any one of them receive or have received any direct or indirect subsidy from the other/s; or
c) they have the same legal representative for purposes of this ITB; or
d) they have a relationship with each other, directly or through common third parties, that puts them in a position to have access to information about, or influence on the Bid of, another Bidder regarding this ITB process;
e) they are subcontractors to each other's bid, or a subcontractor to one bid also submits another Bid under its name as lead Bidder; or
f) an expert proposed to be in the bid of one Bidder participates in more than one Bid received for this ITB process. This condition does not apply to subcontractors being included in more than one Bid.

19. Joint Venture, Consortium or Association

If the Bidder is a group of legal entities that will form or have formed a joint venture, consortium or association at the time of the submission of the Bid, they shall confirm in their Bid that : (i) they have designated one party to act as a lead entity, duly vested with authority to legally bind the members of the joint venture jointly and severally, and this shall be duly evidenced by a duly notarized Agreement among the legal entities, which shall be submitted along with the Bid; and (ii) if they are awarded the contract, the contract shall be entered into, by and between UNDP and the designated lead entity, who shall be acting for and on behalf of all entities that comprise the joint venture.

After the bid has been submitted to UNDP, the lead entity identified to represent the joint venture shall not be altered without the prior written consent of UNDP. Furthermore, neither the lead entity nor the member entities of the joint venture can:

a) Submit another Bid, either in its own capacity; nor
b) As a lead entity or a member entity for another joint venture submitting another Bid.

The description of the organization of the joint venture/consortium/association must clearly define the expected role of each of the entity in the joint venture in delivering the requirements of the ITB, both in the bid and in the Joint Venture Agreement. All entities that comprise the joint venture shall be subject to the eligibility and qualification assessment by UNDP.

Where a joint venture is presenting its track record and experience in a similar undertaking as those required in the ITB, it should present such information in the following manner:

a) Those that were undertaken together by the joint venture; and
b) Those that were undertaken by the individual entities of the joint venture expected to be involved in the performance of the services defined in the ITB.

Previous contracts completed by individual experts working privately but who are permanently or were temporarily associated with any of the member firms cannot be claimed as the experience of the joint venture or those of its members, but should only be claimed by the individual experts themselves in their presentation of their individual credentials.

If the Bid of a joint venture is determined by UNDP as the most responsive Bid that offers the best value for money, UNDP shall award the contract to the joint venture, in the name of its designated lead entity, who shall sign the contract for and on behalf of all the member entities.

20. Alternative Bid

Unless otherwise specified in the **Data Sheet** (DS nos. 5 and 6), alternative bid shall not be considered. Where the conditions for its acceptance are met, or justifications are clearly established, UNDP reserves the right to award a contract based on an alternative bid.

21. Validity Period

21.1 Bid shall remain valid for the period specified in the **Data Sheet** (DS no. 8), commencing on the submission deadline date also indicated in the **Data Sheet** (DS no. 21). A Bid valid for a shorter period shall be immediately rejected by UNDP and rendered non-responsive.

21.2 In exceptional circumstances, prior to the expiration of the Bid validity period, UNDP may request Bidders to extend the period of validity of their Bid. The request and the responses shall be made in writing, and shall be considered integral to the Bid.

22. Bidder's Conference

When appropriate, a Bidder's conference will be conducted at the date, time and location

specified in the **Data Sheet** (DS no. 7). All Bidders are encouraged to attend. Non-attendance, however, shall not result in disqualification of an interested Bidder. Minutes of the Bidder's conference will be either posted on the UNDP website, or disseminated to the individual firms who have registered or expressed interest with the contract, whether or not they attended the conference. No verbal statement made during the conference shall modify the terms and conditions of the ITB unless such statement is specifically written in the Minutes of the Conference, or issued/posted as an amendment in the form of a Supplemental Information to the ITB.

D. SUBMISSION AND OPENING OF BID

23. Submission

23.1 The Technical Bid and the Price Schedule **must** be submitted together and sealed together in one and the same envelope, delivered either personally, by courier, or by electronic method of transmission. If submission will not be done by electronic means, the Technical Bid and Price Schedule must be sealed together in an envelope whose external side must :

a) Bear the name of the Bidder;
b) Be addressed to UNDP as specified in the **Data Sheet** (DS no.20); and
c) Bear a warning not to open before the time and date for Bid opening as specified in the **Data Sheet** (DS no. 24)**.**

If the envelope is not sealed nor labelled as required, the Bidder shall assume the responsibility for the misplacement or premature opening of Bid due to improper sealing and labelling by the Bidder.

23.2 Bidders must submit their Bid in the manner specified in the **Data Sheet** (DS nos. 22 and 23). When the Bid is expected to be in transit for more than 24 hours, the Bidder must ensure that sufficient lead time has been provided in order to comply with UNDP's deadline for submission. UNDP shall indicate for its record that the official date and time of receiving the Bid is the actual date and time when the said Bid has physically arrived at the UNDP premises indicated in the **Data Sheet** (DS no. 20).

23.3 Bidders submitting Bid by mail or by hand shall enclose the original and each copy of the Bid, in separate sealed envelopes, duly marking each of the envelopes as "Original Bid" and the others as "Copy of Bid". The two envelopes, consisting of original and copies, shall then be sealed in an outer envelope. The number of copies required shall be as specified in the **Data Sheet** (DS no. 19)**.** In the event of any discrepancy between the contents of the "Original Bid" and the "Copy of Bid", the contents of the original shall govern. The original version of the Bid shall be signed or initialled by the Bidder or person(s) duly authorized to commit the Bidder on every page. The authorization shall be communicated through a document evidencing such authorization issued by the highest official of the firm, or a Power of Attorney, accompanying the Bid.

23.4 Bidders must be aware that the mere act of submission of a Bid, in and of itself, implies that the Bidder accepts the General Contract Terms and Conditions of UNDP as attached

hereto as Section 11.

24. Deadline for Submission of Bid and Late Bids

Bid must be received by UNDP at the address and no later than the date and time specified in the **Data Sheet** (DS no. 20 and 21).

UNDP shall not consider any Bid that arrives after the deadline for submission of Bid. Any Bid received by UNDP after the deadline for submission of Bid shall be declared late, rejected, and returned unopened to the Bidder.

25. Withdrawal, Substitution, and Modification of Bid

25.1 Bidders are expected to have sole responsibility for taking steps to carefully examine in detail the full consistency of its Bid to the requirements of the ITB, keeping in mind that material deficiencies in providing information requested by UNDP, or lack clarity in the description of goods and related services to be provided, may result in the rejection of the Bid. The Bidder shall assume any responsibility regarding erroneous interpretations or conclusions made by the Bidder in the course of understanding the ITB out of the set of information furnished by UNDP.

25.2 A Bidder may withdraw, substitute or modify its Bid after it has been submitted by sending a written notice in accordance with ITB Clause 23, duly signed by an authorized representative, and shall include a copy of the authorization (or a Power of Attorney). The corresponding substitution or modification of the Bid must accompany the respective written notice. All notices must be received by UNDP prior to the deadline for submission and submitted in accordance with ITB Clause 23 (except that withdrawal notices do not require copies). The respective envelopes shall be clearly marked "WITHDRAWAL," "SUBSTITUTION," or MODIFICATION".

25.3 Bid requested to be withdrawn shall be returned unopened to the Bidders.

25.4 No Bid may be withdrawn, substituted, or modified in the interval between the deadline for submission of Bid and the expiration of the period of Bid validity specified by the Bidder on the Bid Submission Form or any extension thereof.

26. Bid Opening

UNDP will open the Bid in the presence of an ad-hoc committee formed by UNDP of at least two (2) members. If electronic submission is permitted, any specific electronic Bid opening procedures shall be as specified in the **Data Sheet** (DS no. 23).

The Bidders' names, modifications, withdrawals, the condition of the envelope labels/seals, the number of folders/files and all other such other details as UNDP may consider appropriate, will be announced at the opening. No Bid shall be rejected at the opening stage, except for late submission, for which the Bid shall be returned unopened to the Bidder.

27. Confidentiality

Information relating to the examination, evaluation, and comparison of Bid, and the recommendation of contract award, shall not be disclosed to Bidders or any other persons not officially concerned with such process, even after publication of the contract award.

Any effort by a Bidder to influence UNDP in the examination, evaluation and comparison of the Bid or contract award decisions may, at UNDP's decision, result in the rejection of its Bid.

In the event that a Bidder is unsuccessful, the Bidder may seek a meeting with UNDP for a debriefing. The purpose of the debriefing is discussing the strengths and weaknesses of the Bidder's submission, in order to assist the Bidder in improving the bid presented to UNDP. The content of other bid and how they compare to the Bidder's submission shall not be discussed.

E. EVALUATION OF BID

28. Preliminary Examination of Bid

UNDP shall examine the Bid to determine whether they are complete with respect to minimum documentary requirements, whether the documents have been properly signed, whether or not the Bidder is in the UN Security Council 1267/1989 Committee's list of terrorists and terrorist financiers, and in UNDP's list of suspended and removed vendors, and whether the Bid are generally in order, among other indicators that may be used at this stage. UNDP may reject any Bid at this stage.

29. Evaluation of Bid

29.1 UNDP shall examine the Bid to confirm that all terms and conditions under the UNDP General Terms and Conditions and Special Conditions have been accepted by the Bidder without any deviation or reservation.

29.2 The evaluation team shall review and evaluate the Bids on the basis of their responsiveness to the Schedule of Requirements and Technical Specifications and other documentation provided, applying the procedure indicated in the **Data Sheet** (DS No. 25). Absolutely no changes may be made by UNDP in the criteria after all Bids have been received.

29.1 UNDP reserves the right to undertake a post-qualification exercise, aimed at determining, to its satisfaction the validity of the information provided by the Bidder. Such post-qualification shall be fully documented and, among those that may be listed in the **Data Sheet** (DS No.33), may include, but need not be limited to, all or any combination of the following :

a) Verification of accuracy, correctness and authenticity of the information provided by the bidder on the legal, technical and financial documents submitted;
b) Validation of extent of compliance to the ITB requirements and evaluation criteria based on what has so far been found by the evaluation team;
c) Inquiry and reference checking with Government entities with jurisdiction on the bidder,

or any other entity that may have done business with the bidder;

d) Inquiry and reference checking with other previous clients on the quality of performance on on-going or previous contracts completed;
e) Physical inspection of the bidder's plant, factory, branches or other places where business transpires, with or without notice to the bidder;
f) Testing and sampling of completed goods similar to the requirements of UNDP, where available; and
g) Other means that UNDP may deem appropriate, at any stage within the selection process, prior to awarding the contract.

30. Clarification of Bid

To assist in the examination, evaluation and comparison of bids, UNDP may, at its discretion, ask any Bidder to clarify its Bid.

UNDP's request for clarification and the Bidder's response shall be in writing. Notwithstanding the written communication, no change in the prices or substance of the Bid shall be sought, offered, or permitted, except to provide clarification, and confirm the correction of any arithmetic errors discovered by UNDP in the evaluation of the Bid, in accordance with ITB Clause 35.

Any unsolicited clarification submitted by a Bidder in respect to its Bid, which is not a response to a request by UNDP, shall not be considered during the review and evaluation of the Bid.

31. Responsiveness of Bid

UNDP's determination of a Bid's responsiveness will be based on the contents of the Bid itself.

A substantially responsive Bid is one that conforms to all the terms, conditions, and specifications of the ITB without material deviation, reservation, or omission.

If a Bid is not substantially responsive, it shall be rejected by UNDP and may not subsequently be made responsive by the Bidder by correction of the material deviation, reservation, or omission.

32. Nonconformities, Reparable Errors and Omissions

32.3 Provided that a Bid is substantially responsive, UNDP may waive any non-conformities or omissions in the Bid that, in the opinion of UNDP, do not constitute a material deviation.

32.4 Provided that a Bid is substantially responsive, UNDP may request the Bidder to submit the necessary information or documentation, within a reasonable period of time, to rectify nonmaterial nonconformities or omissions in the Bid related to documentation requirements. Such omission shall not be related to any aspect of the price of the Bid. Failure of the Bidder to comply with the request may result in the rejection of its Bid.

32.5 Provided that the Bid is substantially responsive, UNDP shall correct arithmetical errors as follows:

a) if there is a discrepancy between the unit price and the line item total that is obtained by multiplying the unit price by the quantity, the unit price shall prevail and the line item total shall be corrected, unless in the opinion of UNDP there is an obvious misplacement of the decimal point in the unit price, in which case the line item total as quoted shall govern and the unit price shall be corrected;
b) if there is an error in a total corresponding to the addition or subtraction of subtotals, the subtotals shall prevail and the total shall be corrected; and
c) if there is a discrepancy between words and figures, the amount in words shall prevail, unless the amount expressed in words is related to an arithmetic error, in which case the amount in figures shall prevail subject to the above.

32.6 If the Bidder does not accept the correction of errors made by UNDP, its Bid shall be rejected.

F. AWARD OF CONTRACT

33. Right to Accept, Reject, or Render Non-Responsive Any or All Bid

33.1 UNDP reserves the right to accept or reject any Bid, to render any or all of the Bids as non-responsive, and to reject all Bids at any time prior to award of contract, without incurring any liability, or obligation to inform the affected Bidder(s) of the grounds for UNDP's action. Furthermore, UNDP is not obligated to award the contract to the lowest price offer.

33.2 UNDP shall also verify, and immediately reject their respective Bid, if the Bidders are found to appear in the UN's Consolidated List of Individuals and Entities with Association to Terrorist Organizations, in the List of Vendors Suspended or Removed from the UN Secretariat Procurement Division Vendor Roster, the UN Ineligibility List, and other such lists that as may be established or recognized by UNDP policy on Vendor Sanctions. (See http://www.undp.org/content/undp/en/home/operations/procurement/procurement_protest/

34. Award Criteria

Prior to expiration of the period of Bid validity, UNDP shall award the contract to the qualified and eligible Bidder that is found to be responsive to the requirements of the Schedule of Requirements and Technical Specification, and has offered the lowest price (See DS No. 32).

35. Right to Vary Requirements at the Time of Award

At the time of award of Contract, UNDP reserves the right to vary the quantity of the goods and/or related services, by up to a maximum twenty five per cent (25%) of the total offer, without any change in the unit price or other terms and conditions.

36. Contract Signature

Within fifteen (15) days from the date of receipt of the Contract, the successful Bidder shall sign

and date the Contract and return it to UNDP.

Failure of the successful Bidder to comply with the requirement of ITB Section F.3 and this provision shall constitute sufficient grounds for the annulment of the award, and forfeiture of the Bid Security if any, and on which event, UNDP may award the Contract to the Bidder with the second highest rated Bid, or call for new Bid.

37. Performance Security

A performance security, if required, shall be provided in the amount and form provided in Section 9 and by the deadline indicated in the **Data Sheet** (DS no. 14), as applicable. Where a Performance Security will be required, the submission of the said document, and the confirmation of its acceptance by UNDP, shall be a condition for the effectivity of the Contract that will be signed by and between the successful Bidder and UNDP.

38. Bank Guarantee for Advanced Payment

Except when the interests of UNDP so require, it is the UNDP's preference to make no advanced payment(s) on contracts (i.e., payments without having received any outputs). In the event that the Bidder requires an advanced payment upon contract signature, and if such request is duly accepted by UNDP, and the said advanced payment exceeds 20% of the total Bid price, or exceed the amount of USD 30,000, UNDP shall require the Bidder to submit a Bank Guarantee in the same amount as the advanced payment. A bank guarantee for advanced payment shall be furnished in the form provided in Section 10.

39. Vendor Protest

UNDP's vendor protest procedure provides an opportunity for appeal to those persons or firms not awarded a purchase order or contract through a competitive procurement process. In the event that a Bidder believes that it was not treated fairly, the following link provides further details regarding UNDP vendor protest procedures: http://www.undp.org/procurement/protest.shtml

Instructions to Bidders

DATA SHEET[2]

The following data for the supply of goods and related services shall complement / supplement the provisions in the Instruction to Bidders. In the case of a conflict between the Instruction to Bidders and the Data Sheet, the provisions in the Data Sheet shall prevail**.**

DS No.	Cross Ref. to Instructions	Data	Specific Instructions / Requirements
1		Project Title:	**ITB/GLED/19/2015**
2		Title of Goods/Services/Work Required:	CIVIL WORKS
3		Country:	SRI LANKA
4	C.13	Language of the Bid:	☒ English
5	C.20	Conditions for Submitting Bid for Parts or sub-parts of the Total Requirements	☒ Not allowed Partial Bids within each LOT is not permitted
6	C.20	Conditions for Submitting Alternative Bid	☒ Shall not be considered
7	C.22	A pre-Bid conference will be held on:	Time: 2.00pm for LOT 1 Date: 11/23/2015 Venue: UNDP GLED Project Office, 31/A, Lady Manning Drive, Batticaloa.

[2] *All DS number entries in the Data Sheet are cited as references in the Instructions to Bidders. All DS Nos. corresponding to a Data must not be modified. Only information on the 3rd column may be modified by the user. If the information does not apply, the 3rd column must state "n/a" but must not be deleted.*

			The UNDP focal point for the arrangement is: Mr. Anuradha Pingama Address: 202-204 Bauddhaloka Mawatha, Colombo 07 Telephone: 2 580 691 ext 1330 E-mail: **anuradha.pingama@undp.org**
8	C.21.1	Period of Bid Validity commencing on the submission date.	☒ 120 days
9	B.9.5 C.15.4 b)	Bid Security	☒ Required Amount: LKR 45,000.00 for Lot 1 Form: Bank Guarantee
	B.9.5	Acceptable forms of Bid Security [3]	☒ Bank Guarantee (See Section 8 for template) ☐ Any Bank-issued Check / Cashier's Check / Certified Check
11	B.9.5 C.15.4 a)	Validity of Bid Security	150 days from the last day of Bid submission. Bid Security of unsuccessful Bidders shall be returned.
12		Advanced Payment upon signing of contract	☐ Allowed up to a maximum of 20% of contract[4] ☒ Not Allowed
13		Liquidated Damages	☒ Will be imposed under the following conditions: Percentage of contract price per week of delay: 0.5% Max. no. of weeks of delay :20 weeks
14	F.37	Performance Security Retention Bond	☒ Required Amount :10% of Bid Amount Form: Bank Guarantee ☒ Required Amount; 5% of contract Amount Period: 12 months from contract completion
15	C.17 C.17.2	Preferred Currency of Bid and Method for Currency conversion	☒ Sri Lankan Rupees (LKR)

[3] *Surety bonds or other instruments issued by non-bank Financial Institutions are least preferred by UNDP. Unless stated otherwise, they shall be considered unacceptable to UNDP.*

[4] *If the advanced payment that the Bidder will submit will exceed 20% of the Price Offer, or will exceed the amount of USD 30,000, the Bidder must submit an Advanced Payment Security in the same amount as the advanced payment, using the form and contents of the document in Section 10*

16	B.10.1	Deadline for submitting requests for clarifications/ questions	30th November 2015
17	B.10.1	Contact Details for submitting clarifications/questions[5]	Focal Person in UNDP: Mr. Anuradha Pingama Address:202-204 Bauddhaloka Mawatha, Colombo 07, Sri Lanka Fax No. : 2 581116 E-mail address dedicated for this purpose: **anuradha.pingama@undp.org**
18	B.11.1	Manner of Disseminating Supplemental Information to the ITB and responses/clarifications to queries	☒ Direct communication to prospective Bidders by email or fax
19	D.23.3	No. of copies of Bid that must be submitted	Original : 01 (ONE) Copies : 01 (ONE)
20	D.23.1 b) D.23.2 D.24	Bid submission address	Attention: Procurement & Admin Unit United Nations Development Programme 202-204 Bauddhaloka Mawatha Colombo 07 Sri Lanka
21	C.21.1 D.24	Deadline of Bid Submission	Date and Time : December 3, 2015 2:00 PM
22	D.23.2	Manner of Submitting Bid	☒ Courier/Hand Delivery
23	D.23.2 D.26	Conditions and Procedures for electronic submission and opening, if allowed	N/app
24	D.23.1 c)	Date, time and venue for opening of Bid	Date and Time: December 3, 2015 2:30 PM Venue : UNDP, 202-204 Bauddhaloka Mawatha, Colombo 07, Sri Lanka
25		Evaluation method to be used in selecting the most responsive Bid	☒ Non-Discretionary "Pass/Fail" Criteria on the Technical Requirements; and ☒ Lowest price offer of technically qualified/responsive Bid
26	C.15.1	Required Documents that must be Submitted to Establish Qualification of Bidders (In	☒ Company Profile, which should not exceed fifteen (15) pages, including printed brochures and product catalogues relevant to the goods/services

[5] *This contact person and address is officially designated by UNDP. If inquiries are sent to other person/s or address/es, even if they are UNDP staff, UNDP shall have no obligation to respond nor can UNDP confirm that the query was officially received.*

		"Certified True Copy" form only) *[check all that apply, delete those that will not be required.]*	being procured ☒ Members of the Governing Board and their Designations duly certified by the Corporate Secretary, or its equivalent document if Bidder is not a corporation ☒ Tax Registration/Payment Certificate issued by the Internal Revenue Authority evidencing that the Bidder is updated with its tax payment obligations, or Certificate of Tax exemption, if any such privilege is enjoyed by the Bidder ☒ Certificate of Registration of the business, including Articles of Incorporation, or equivalent document if Bidder is not a corporation ☒ Quality Certificate (e.g., ISO, etc.) and/or other similar certificates, accreditations, awards and citations received by the Bidder, if any ☒ Latest Audited Financial Statement (Income Statement and Balance Sheet) including Auditor's Report for the past years; *[3 years]* ☒ Evidences to have the adequate bank credit facilities. ☒ Evidences to have the sufficient manpower competent to perform the project. ☒ Evidences to have the required machineries to perform the project. ☒ Statement of Satisfactory Performance from the Top *3* Clients in terms of Contract Value the past *3 years* ☒ List of Bank References (Name of Bank, Location, Contact Person and Contact Details)
27		Other documents that may be Submitted to Establish Eligibility	Valid/Updated ICTAD Registration
28	C.15	Structure of the Technical Bid and List of Documents to be Submitted	*N/app*
29	C.15.2	Latest Expected date for commencement of Contract	*December 20, 2015*
30	C.15.2	Maximum Expected duration of contract	TBN
31		UNDP will award the contract to:	One or more Bidders, depending on the following factors: *[Each LOT can be separately awarded or multiple LOT s per bidder or all LOTs to one bidder*

			depending on technical compliance, ICTAD qualifications and capacity]
32	F.34	Criteria for the Award and Evaluation of Bid	**<u>Award Criteria</u>** ☒ Non-discretionary "Pass" or "Fail" rating on the detailed contents of the Schedule of Requirements and Technical Specifications ☒ Compliance on the following qualification requirements : ☒ In a scenario where a Bidder is lowest in more than one Lot but does not have capacity to execute multiple Lots UNDP shall use the following award criteria: a) Overall least price combination across Lots to UNDP based on different combinations of award. b) Preference to award a Lot to a bidder in the event that there may not be other technically responsive bids for that Lot to ensure there is coverage for all Lots; c) Irrespective of determined capacity to undertake more than one lot, UNDP may decide at its discretion to award Lots to different bidders to reduce risk of delivery. **<u>Bid Evaluation Criteria</u>**[6] ☒ Minimum no. of years of experience: *[03 years];* ☒ Minimum no. of construction projects in similar nature undertaken within last Five years: *[03 projects];* ☒ Minimum no. of construction projects in similar money volume of undertaken within last five years: [02 projects]; ☒ Full compliance of Bid to the Technical Requirements;
33	E.29	Post qualification Actions	☒ Verification of accuracy, correctness and authenticity of the information provided by the bidder on the legal, technical and financial documents submitted; ☒ Validation of extent of compliance to the ITB requirements and evaluation criteria based on what has so far been found by the evaluation team;

[6] *Pls. reconcile and ensure consistency with the contents of the Technical Specifications*

			☒ Inquiry and reference checking with Government entities with jurisdiction on the bidder, or any other entity that may have done business with the bidder; ☒ Inquiry and reference checking with other previous clients on the quality of performance on ongoing or previous contracts completed; ☒ Physical inspection of the bidder's plant, factory, branches or other places where business transpires, with or without notice to the bidder; ☐ Testing and sampling of completed goods similar to the requirements of UNDP, where available; and ☐ Others *[click here to specify]*
34		Conditions for Determining Contract Effectivity	☒ UNDP's receipt of Performance Bond ☐ UNDP's approval of plans, drawings, samples, etc. ☐ Others *[click here to specify]*.
35		Other Information Related to the ITB[7]	*[All other instructions and information not mentioned in DSs 1-33 but are relevant to the ITB must be cited here, and any further entries that may be added below this table row.]*

Section 3a: Schedule of Requirements and Technical Specifications

*** please refer to the attached a) Tender BOQ b) Scope of works and c) Pricing preambles**

[7] *Where the information is available in the web, a URL for the information may simply be provided.*

Section 4: Bid Submission Form[8]

(This should be written in the Letterhead of the Bidder. Except for indicated fields, no changes may be made in this template.)

Sri Lanka
6/29/2015

To: Rohana Dissanayake, Head of Procurement

Dear Sir/Madam:

We, the undersigned, hereby offer to supply the goods and related services required for [*insert: title of goods and services required as per ITB*]in accordance with your Invitation to Bid dated Insert: bid date. We are hereby submitting our Bid, which includes the Technical Bid and Price Schedule.

We hereby declare that:

a) All the information and statements made in this Bid are true and we accept that any misrepresentation contained in it may lead to our disqualification;
b) We are currently not on the removed or suspended vendor list of the UN or other such lists of other UN agencies, nor are we associated with, any company or individual appearing on the 1267/1989 list of the UN Security Council;
c) We have no outstanding bankruptcy or pending litigation or any legal action that could impair our operation as a going concern; and
d) We do not employ, nor anticipate employing, any person who is or was recently employed by the UN or UNDP.

We confirm that we have read, understood and hereby fully accept the Schedule of Requirements and Technical Specifications describing the duties and responsibilities required of us in this ITB, and the General Terms and Conditions of UNDP's Standard Contract for this ITB.

We agree to abide by this Bid for *[insert: period of validity as indicated in Data Sheet]*.

We undertake, if our Bid is accepted, to initiate the supply of goods and provision of related services not later than the date indicated in the Data Sheet.

We fully understand and recognize that UNDP is not bound to accept this Bid that we shall bear all costs associated with its preparation and submission, and that UNDP will in no case be responsible or liable for those costs, regardless of the conduct or outcome of the evaluation.

[8] *No deletion or modification may be made in this form. Any such deletion or modification may lead to the rejection of the Bid.*

We remain,

Yours sincerely,

Authorized Signature [*In full and initials*]: _____
Name and Title of Signatory: _____
Name of Firm: _____
Contact Details: _____

[please mark this letter with your corporate seal, if available]

Section 5: Documents Establishing the Eligibility and Qualifications of the Bidder

Bidder Information Form[9]

Date: *[insert date (as day, month and year] of Bid Submission*]
ITB No.: *[insert number of bidding process]*

Page _____of _____ pages

1. Bidder's Legal Name *[insert Bidder's legal name]*		
2. In case of Joint Venture (JV), legal name of each party: *[insert legal name of each party in JV]*		
3. Actual or intended Country/ies of Registration/Operation: *[insert actual or intended Country of Registration]*		
4. Year of Registration in its Location: *[insert Bidder's year of registration]*		
5. Countries of Operation	6. No. of staff in each Country	7.Years of Operation in each Country
8. Legal Address/es in Country/ies of Registration/Operation:*[insert Bidder's legal address in country of registration]*		
9. Value and Description of Top three (3) Biggest Contract for the past five (5) years		
10. Latest Credit Rating (Score and Source, if any)		
11. Brief description of litigation history (disputes, arbitration, claims, etc.), indicating current status and outcomes, if already resolved.		
12. Bidder's Authorized Representative Information Name: *[insert Authorized Representative's name]* Address: *[insert Authorized Representative's Address]* Telephone/Fax numbers: *[insert Authorized Representative's telephone/fax numbers]* Email Address: *[insert Authorized Representative's email address]*		
13. Are you in the UNPD List 1267.1989 or UN Ineligibility List ? ☐ YES or ☐ NO		

[9] *The Bidder shall fill in this Form in accordance with the instructions. Apart from providing additional information, no alterations to its format shall be permitted and no substitutions shall be accepted.*

14. Attached are copies of original documents of: ☐ All eligibility document requirements listed in the Data Sheet ☐ If Joint Venture/Consortium – copy of the Memorandum of Understanding/Agreement or Letter of Intent to form a JV/Consortium, or Registration of JV/Consortium, if registered ☐ If case of Government corporation or Government-owned/controlled entity, documents establishing legal and financial autonomy and compliance with commercial law.

Joint Venture Partner Information Form (if Registered)[10]

Date: *[insert date (as day, month and year) of Bid Submission*]
ITB No.: *[insert number of bidding process]*

Page _____ of _____ pages

1. Bidder's Legal Name: *[insert Bidder's legal name]*		
2. JV's Party legal name: *[insert JV's Party legal name]*		
3. JV's Party Country of Registration: *[insert JV's Party country of registration]*		
4. Year of Registration: *[insert Party's year of registration]*		
5. Countries of Operation	6. No. of staff in each Country	7.Years of Operation in each Country
8. Legal Address/es in Country/ies of Registration/Operation: *[insert Party's legal address in country of registration]*		
9. Value and Description of Top three (3) Biggest Contract for the past five (5) years		
10. Latest Credit Rating (if any):Click here to enter text.		
1. Brief description of litigation history (disputes, arbitration, claims, etc.), indicating current status and outcomes, if already resolved. Click here to enter text.		

[10] *The Bidder shall fill in this Form in accordance with the instructions. Apart from providing additional information, no alterations to its format shall be permitted and no substitutions shall be accepted.*

13. JV's Party Authorized Representative Information Name: *[insert name of JV's Party authorized representative]* Address: *[insert address of JV's Party authorized representative]* Telephone/Fax numbers: *[insert telephone/fax numbers of JV's Party authorized representative]* Email Address: *[insert email address of JV's Party authorized representative]*
14. Attached are copies of original documents of: *[check the box(es) of the attached original documents]* ☐ All eligibility document requirements listed in the Data Sheet ☐ Articles of Incorporation or Registration of firm named in 2. ☐ In case of government owned entity, documents establishing legal and financial autonomy and compliance with commercial law.

Section 6: Technical Bid Form[11]

INSERT TITLE OF THE ITB

Name of Bidding Organization / Firm:	
Country of Registration:	
Name of Contact Person for this Bid:	
Address:	
Phone / Fax:	
Email:	

SECTION 1: EXPERTISE OF FIRM/ ORGANISATION

This section should fully explain the Bidder's resources in terms of personnel and facilities necessary for the performance of this requirement.

1.1 Brief Description of Bidder as an Entity: Provide a brief description of the organization / firm submitting the Bid, its legal mandates/authorized business activities, the year and country of incorporation, and approximate annual budget, etc. Include reference to reputation, or any history of litigation and arbitration in which the organisation / firm has been involved that could adversely affect or impact the delivery of goods and/or performance of related services, indicating the status/result of such litigation/arbitration.

1.2. Financial Capacity: Based on the latest Audited Financial Statement (Income Statement and Balance Sheet) describe the financial capacity (liquidity, stand-by credit lines, etc.) of the bidder to engage into the contract. Include any indication of credit rating, industry rating, etc.

1.3. Track Record and Experiences: Provide the following information regarding corporate experience within at least the last five (5) years which are related or relevant to those required for this Contract.

[11] *Technical Bids not submitted in this format may be rejected.*

Name of project	Client	Contract Value	Period of activity	Types of activities undertaken	Status or Date Completed	References Contact Details (Name, Phone, Email)

SECTION 2 - SCOPE OF SUPPLY, TECHNICAL SPECIFICATIONS, AND RELATED SERVICES

This section should demonstrate the Bidder's responsiveness to the specification by identifying the specific components proposed, addressing the requirements, as specified, point by point; providing a detailed description of the essential performance characteristics proposed; and demonstrating how the proposed bid meets or exceeds the specifications.

2.1. Scope of Supply: Please provide a detailed description of the goods to be supplied, indicating clearly how they comply with the technical specifications required by the ITB (see below table); describe how the organisation/firm will supply the goods and any related services, keeping in mind the appropriateness to local conditions and project environment.

Item No.	Description/ Specification of Goods	Source/ Manufacturer	Country of Origin	Qty	Quality Certificate/ Export Licences, etc. (indicate all that applies and if attached)

A supporting document with full details may be annexed to this section

2.2. Technical Quality Assurance Mechanisms: The bid shall also include details of the Bidder's internal technical and quality assurance review mechanisms, all the appropriate quality certificates, export licenses and other documents attesting to the superiority of the quality of the goods and technologies to be supplied.

2.3. Reporting and Monitoring: Please provide a brief description of the mechanisms proposed for this project for reporting to the UNDP and partners, including a reporting schedule.

2.4. Subcontracting: Explain whether any work would be subcontracted, to whom, how much percentage of the work, the rationale for such, and the roles of the proposed sub-contractors. Special attention should be given to providing a clear picture of the role of each entity and how everyone will function as a team.

2.5. Risks / Mitigation Measures: Please describe the potential risks for the implementation of this project that may impact achievement and timely completion of expected results as well as their quality. Describe measures that will be put in place to mitigate these risks.

2.6 Implementation Timelines: The Bidder shall submit a Gantt Chart or Project Schedule indicating the detailed sequence of activities that will be undertaken and their corresponding timing.

2.7. Partnerships (Optional): Explain any partnerships with local, international or other organizations that are planned for the implementation of the project. Special attention should be given to providing a clear picture of the role of each entity and how everyone will function as a team. Letters of commitment from partners

and an indication of whether some or all have successfully worked together on other previous projects is encouraged.

2.8. Anti-Corruption Strategy (Optional): Define the anti-corruption strategy that will be applied in this project to prevent the misuse of funds. Describe the financial controls that will be put in place.

2.9 Statement of Full Disclosure: This is intended to disclose any potential conflict in accordance with the definition of "conflict" under Section 4 of this document, if any.

2.10 Other: Any other comments or information regarding the bid and its implementation.

SECTION 3: PERSONNEL

3.1 Management Structure: Describe the overall management approach toward planning and implementing the contract. Include an organization chart for the management of the contract, if awarded.

3.2 Staff Time Allocation: Provide a spreadsheet will be included to show the activities of each personnel involved in the implementation of the contract. Where the expertise of the personnel is critical to the success of the contract, UNDP will not allow substitution of personnel whose qualifications had been reviewed and accepted during the bid evaluation. (If substitution of such a personnel is unavoidable, substitution or replacement will be subject to the approval of UNDP. No increase in costs will be considered as a result of any substitution).

3.3 Qualifications of Key Personnel. Provide the CVs for key personnel (Team Leader, Managerial and general staff) that will be provided to support the implementation of this project. CVs should demonstrate qualifications in area of expertise relevant to the Contract. Please use the format below:

Name:		
Role in Contract Implementation:		
Nationality:		
Contact information:		
Countries of Relevant Work Experience:		
Language Skills:		
Education and other Qualifications:		
Summary of Experience: *Highlight experience in the region and on similar projects.*		
Relevant Experience (From most recent):		
Period: From – To	**Name of activity/ Project/ funding organisation, if applicable:**	**Job Title and Activities undertaken/Description of actual role performed:**
e.g. June 2010-January 2011		
Etc.		
Etc.		
References (minimum of 3):	*Name* *Designation* *Organization* *Contact Information – Address; Phone; Email; etc.*	

Declaration:

I confirm my intention to serve in the stated position and present availability to serve for the term of the proposed contract. I also understand that any wilful misstatement described above may lead to my disqualification, before or during my engagement.

_____

_____

Signature of the Nominated Team Leader/Member Date Signed

Section 7: Price Schedule Form[12]

The Bidder is required to prepare the Price Schedule as indicated in the Instruction to Bidders.

The Price Schedule must provide a detailed cost breakdown of all goods and related services to be provided, from unit price to lot prices. Separate figures must be provided for each functional grouping or category, if any.

Any estimates for cost-reimbursable items, such as travel of experts and out-of-pocket expenses, should be listed separately.

The format shown on the following pages is suggested for use as a guide in preparing the Price Schedule. The format includes specific expenditures, which may or may not be required or applicable but are indicated to serve as examples.

A. **Cost Breakdown per Deliverable Items***

No.	Deliverables *[list them as referred to in the ITB]*	Expected Date of Delivery/Completion	Percentage of Total Price	Price (Lump Sum, All Inclusive)
1	Deliverable 1		[Percentage (weight) of each deliverable over the total price for the payment purposes, as per ITB)	
2	Deliverable 2			
3	….			
	Total		100%	

** This shall be the basis of payment tranches*

B. **Cost Breakdown by Cost Component:**

The Bidders are requested to provide the cost breakdown for the above given prices for each deliverable based on the following format. UNDP shall use the cost breakdown for the price reasonability assessment purposes as well as the calculation of price in the event that both parties have agreed for additional set of goods and/or related services.

[12] *No deletion or modification may be made in this form. Any such deletion or modification may lead to the rejection of the Bid.*

Deliverables and Sub-Components	(a) Quantity	Country of Origin	(b) Unit Price	(c)=(a)x(b) Total Cost of Goods	Brief Description of Related Services	(d) Cost of Related Services	(c) + (d) Total Price
I. Deliverable 1							
Sub-Component 1							
Sub-Component 2							
Sub-Component 3							
II. Deliverable 2							
Sub-Component 1							
Sub-Component 2							
Sub-Component 3							
III. Other Related Costs							
GRAND TOTAL PRICE							

Section 8: FORM FOR BID SECURITY

(This must be finalized using the official letterhead of the Issuing Bank. Except for indicated fields, no changes may be made in this template.)

To: ***UNDP Resident Representative***
202-204, Bauddhaloka Mawatha, Colombo 07.

WHEREAS [*name and address of Contractor*] (hereinafter called "the Bidder") has submitted a Bid to UNDP dated Click here to enter a date. , to deliver goods and execute related services for *[indicate ITB title]* (hereinafter called "the Bid"):

AND WHEREAS it has been stipulated by you that the Bidder shall furnish you with a Bank Guarantee by a recognized bank for the sum specified therein as security in the event that the Bidder:

a) Fails to sign the Contract after UNDP has awarded it;
b) Withdraws its Bid after the date of the opening of the Bid;
c) Fails to comply with UNDP's variation of requirement, as per ITB Section F.35; or
d) Fails to furnish Performance Security, insurances, or other documents that UNDP may require as a condition to rendering the contract effective.

AND WHEREAS we have agreed to give the Bidder such this Bank Guarantee:

NOW THEREFORE we hereby affirm that we are the Guarantor and responsible to you, on behalf of the Bidder, up to a total of [*amount of guarantee*] [*in words and numbers*], such sum being payable in the types and proportions of currencies in which the Price Bid is payable, and we undertake to pay you, upon your first written demand and without cavil or argument, any sum or sums within the limits of *[amount of guarantee as aforesaid*] without your needing to prove or to show grounds or reasons for your demand for the sum specified therein.

This guarantee shall be valid until 30 days after the date of validity of the bids.

SIGNATURE AND SEAL OF THE GUARANTOR BANK

Date .....

Name of Bank .....

Address .....

Section 9: FORM FOR PERFORMANCE SECURITY[13]

(This must be finalized using the official letterhead of the Issuing Bank. Except for indicated fields, no changes may be made in this template.)

To: UNDP
[Insert contact information as provided in Data Sheet]

WHEREAS [*name and address of Contractor*] (hereinafter called "the Contractor") has undertaken, in pursuance of Contract No. Click to enter dated Click to enter , to deliver the goods and execute related services Click here to enter text. (hereinafter called "the Contract"):

AND WHEREAS it has been stipulated by you in the said Contract that the Contractor shall furnish you with a Bank Guarantee by a recognized bank for the sum specified therein as security for compliance with his obligations in accordance with the Contract:

AND WHEREAS we have agreed to give the Contractor such a Bank Guarantee:

NOW THEREFORE we hereby affirm that we are the Guarantor and responsible to you, on behalf of the Contractor, up to a total of [*amount of guarantee*] [*in words and numbers*], such sum being payable in the types and proportions of currencies in which the Contract Price is payable, and we undertake to pay you, upon your first written demand and without cavil or argument, any sum or sums within the limits of *[amount of guarantee as aforesaid*] without your needing to prove or to show grounds or reasons for your demand for the sum specified therein.

This guarantee shall be valid until a date 30 days from the date of issue by UNDP of a certificate of satisfactory performance and full completion of services by the Contractor.

SIGNATURE AND SEAL OF THE GUARANTOR BANK

Date .....

Name of Bank .....

Address .....

[13] *If the RFP requires the submission of a Performance Security, which shall be made a condition to the signing and effectivity of the contract, the Performance Security that the Bidder's Bank will issue shall use the contents of this template*

Section 11: Contract

[redacted]

PLEASE ATTACH HERETO THE SAMPLE OF THE CONTRACT WHICH WILL BE USED AND THE GENERAL TERMS AND CONDITIONS FOR CIVIL WORK IS AVAILABLE TO DOWNLOAD FROM **WWW.LK.UNDP.ORG > OPERATIONS > PROCUREMENT.**

Empowered lives.
Resilient nations.

CONTRACT FOR CIVIL WORKS

Date: Click here to enter text.

Dear Sir/Madam,

Contract NO. ……..

Ref.: (Project Name & No) Click here to enter text.

The United Nations Development Programme (hereinafter referred to as "UNDP"), wishes to engage your company, Click here to enter text. duly incorporated under the Laws of Sri Lanka (hereinafter referred to as the "Contractor") in order to performClick here to enter text. (hereinafter referred to as the "Works"), in accordance with the following Contract:

1. Contract Documents

1.1 This Contract is subject to the UNDP General Conditions for Civil Works available at (www.lk.undp.org > Operations > procurement). The provisions of such Annex shall control the interpretation of this Contract and in no way shall be deemed to have been derogated by the contents of this letter and any other Annexes, unless otherwise expressly stated under section 4 of this letter, entitled "Special Conditions".

1.2 The Contractor and UNDP also agree to be bound by the provisions contained in the

following documents, which shall take precedence over one another in case of conflict in the following order:

a) this letter;
b) the Technical Specifications and Drawings Click here to enter text., attached hereto as Annex II;
c) the Contractor's Tender Click here to enter text. only, not attached hereto but known to and in the possession of both parties.

1.3 All the above shall form the Contract between the Contractor and UNDP, superseding the contents of any other negotiations and/or agreements, whether oral or in writing, pertaining to the subject of this Contract.

2. Obligations of the Contractor

2.1 The Contractor shall commence work within Click here to enter text. days from the date on which he shall have been given access to the Site and received the notice to commence from the Engineer, and shall perform and substantially complete the Works by Click here to enter text., in accordance with the Contract. The Contractor shall provide all materials, supplies, labour and other services necessary to that end.

2.2 The Contractor shall submit to the Engineer the Programme of Work referred to in Clause 13 of the General Conditions by Click here to enter text..

2.3 The Contractor represents and warrants the accuracy of any information or data provided to UNDP for the purpose of entering into this Contract, as well as the quality of the Works foreseen under this Contract in accordance with the highest industrial and professional standards.

3. Price and Payment

3.1 In full consideration of the complete and satisfactory performance of the Works under this Contract, **UNDP shall pay the Contractor an amount not exceeding contract price of LKR ..... equal to LKR** Click here to enter text. **net volume of works, plus LKR** Click here to enter text. **for ..... VAT** as and if applicable within the framework of Annex I.

3.2 The price of this Contract is not subject to any adjustment or revision because of currency fluctuations during the performance of the Contract.

3.3 Invoices shall be submitted by the Contractor to the Engineer upon achievement of the corresponding milestones and the UNDP payments will be effected on a measure and pay basis on submission of certified invoices in keeping with the price stipulated in the contractor's offer document. Each invoice shall detail the net volume of works billed and

applicable VAT separately.

MILESTONE

3.3.1. Payments shall be made on measure and pay basis for the following activities upon submission of invoices for progress payments of the activities (Amounts given here are VAT Excluded amounts in LKR). Such invoices for progress payments shall not be less than 20% of the total contract value or the following activities upon completion of the activities (Amounts given here are VAT Excluded amounts in LKR)

3.3.2 Final payment shall be made upon completion of Works, and submission of Retention bond

3.4 UNDP shall effect payment of the invoices after receipt of the certificate of payment issued by the Engineer, approving the amount contained in the invoice. The Engineer may make corrections to that amount, in which case UNDP may effect payment for the amount so corrected. The Engineer may also withhold invoices if the work is not performed at any time in accordance with the terms of the Contract or if the necessary insurance policies or performance security are not valid and/or in order. The Engineer shall process the invoices submitted by the Contractor within Click here to enter text. of their receipt.

3.5 Payments effected by UNDP to the Contractor shall be deemed neither to relieve the Contractor of its obligations under this Contract nor as acceptance by UNDP of the Contractor's performance of the Works.

3.6 Payment of the final invoice shall be effected by UNDP after issuance of the Certificate of Final Completion by the Engineer.

4. Special conditions

4.1 UNDP will pay an advance payment which is Click here to enter text. upon signature of this contract by both parties and submission of an advance bond by the contractor for the full amount of the advance payment.

4.2 The amounts of the payments referred to under section 3.6 above shall be subject to a

deduction of Click here to enter text.% (Click here to enter text.) of the amount accepted for payment until the cumulative amount of the deductions so effected shall equal the amount of the advance payment. Should the cumulative amount of the deductions so made be lower than the amount of the advance payment after the date of substantial completion of the Works, UNDP may deduct the amount equal to the difference between the advance payment and the cumulative deductions from the payments due after substantial completion or may recover such amount from the bank guarantee referred to in 4.1 above. The amount of the payments referred to under paragraph 3.3 above shall be subject to a deduction of 10% of the amount accepted for payment as Security Deposit (retention amount) from all progressive payments of contract sum subject to a limit of 5% of the Final Net Contract Sum which will be refundable back to the contractor only after the defects liability period of 4 (four) months and the issuance of final certificate.

4.3 The Performance BOND referred to in Clause 10 of the General Conditions shall be submitted by the Contractor for an amount of **LKR** .

4.4 The Contractor may submit invoices for materials and plant stored at the Site, provided they are necessary and adequate for the performance of the Works and they are protected from weather conditions and duly insured as per the instructions of the Engineer.

4.5 The liability insurance referred to in Clause 23 of the General Conditions shall be taken out by the Contractor for an amount of **LKR .**

4.6 According to Clause 45 of the General Conditions, the liquidated damages for delay shall be 0.5% of the net price of the Contract per week of delay, up to a maximum of 10% of the final net value of the Contract.

5. Submission of invoices

5.1 One original and one copy of every invoice shall be submitted by mail by the Contractor for each payment under the Contract to the Engineer's address specified in clause 8.2.

5.2 Invoices submitted by fax shall not be accepted by UNDP.

6. Time and manner of payment

6.1 Invoices shall be paid within thirty (30) days of the date of their receipt and acceptance by UNDP.

6.2 All payments shall be made by UNDP to the following Bank account of the Contractor:

Contractor's Bank Details

7. Modifications

7.1 Any modification to this Contract shall require an amendment in writing between both parties duly signed by the authorized representatives of the Contractor and UNDP.

8. Notifications

8.1 For the purpose of notifications under the Contract, the addresses of UNDP and the Contractor are as follows:

For the UNDP:

Click here to enter text.

For the Contractor:

Click here to enter text.

8.2 For the purposes of communications with regard to the implementation, the address of the Officer shall be as follows:

Click here to enter text.

If the above terms and conditions meet with your agreement as typed in this letter and in the Contract Documents, please initial every page of this letter and its attachments and return to this office one original of this Contract, duly signed and dated.

Yours sincerely,

Click here to enter text.

For the Company/Organization

Agreed and Accepted:

Signature: ----------

Name: ----------

Title: ----------

Date: ----------

Section 3a: Schedule of Requirements and Technical Specifications

PROJECT : RENOVATION OF ICE CUBE MAKING UNIT IN KALUWANKERNY

3.a.1 Other Documents Applicable at Implementation Process:

Any interpretations not covered under the UNDP template shall be binding vide the standard documentations adopted by the GOSL as listed below.

3.a.1.1 Specifications

Publication No.	Description
SCA/4 (Vol.I)	Specifications for Building Works Vol. (I), Sri Lanka. 3rd Edition (Revision) July 2004
SCA/4 (Vol.II)	Specifications for Building Works Second Edition (Revised), October 2001
SCA/3/2	Specifications for Water Supply, Sewerage and Storm Water Drainage Second Edition (Revised), August 2000
SCA/8	Specification for Electrical & Mechanical works, Second Edition (Revised), August 2000

3.a.1.2 Method of Measurements – SLS 573

3.a.1.3 Condition of contract : ICTAD/SBD/03

The engineer of the contract is to be nominated by UNDP on award of the contract.

3.a.2.

A. Scope of Work

Construction of Boat repairing center, Ice Plant, Auction center and value addition for Fish in Kaluwankerni

Kaluwankerni is a resourceful region with many natural resources related industries including fisheries industry and many fishermen have been engaging in deep sea and long line fishing.

However, the fishermen have been facing issues with storing their fishing equipment including fishing nets, fishing gears and other required equipment around the landing area. And they do not have a boat repair center in nearby vicinity. Thus a fishing boat repairing center would be a valuable asset for the local fishermen.

There was a colossal ice plant functioning 25 years ago in Kaluwankerni area but at present, there are no ice plants functioning in the 25 km of marine stretch in the area even though there is an enormous need of ice in the area since the fish harvest in the area is more than 2-3MT per day and needs to be stored and traded in Kaluwankerni. Ice is a main ingredient to preserve the catch until marketing. Hence, this is an important component, as it can empower the fishing industry in the target areas as fishermen can keep their fish to get the best price and will not need to depend on ice coming from outside. Also, this will help to reduce post-harvest losses.

In connection with those interventions the fish collection point with retail shop is a crucial need for facilitating the marketing of fish with good prices. There is no auction Centre around the area and assembling a fish auction center in Kaluwankerni would help in enhancing the local market opportunities for the native fishermen. Along with infrastructural development, the fishing community of the Kaluwankerni area should be provided with the knowledge over value addition procedures they can carry out in order to improve their income level.

There is an existing building in Kaluwankerni that was supposed to be utilized as a boat repairing center, fuel station and fishermen's resting room. But that property has been abandoned for past few years. And this facility can be renovated and reactivated as a boat repair center with resting areas as well as a fish auction center. Along with these ventures, 2 active Fisheries Societies in Kaluwankerni (Kaluwankerni 1 and Kaluwankerni 2) have shown their interest in establishing an ice plant and carrying out its functions and youth in the area are also willing to develop their skills in boat and machinery repairing therefore this venture would create more employment opportunities.

Maximum Expected duration of contract **–05 months**

3.a.3.1 GENERAL

1. The bidder should allow against the items or in the prices for everything contained in this Bill of Quantities which has a monetary value.

2. Lump sums shall not be given where unit rates are applicable.

3. Unit rates and extensions shall be given in Sri Lankan Rupees (SLR) to a maximum of two places decimals.

4. The various documents collectively referred to herein as the Bills of Quantities jointly constitute the Bill of Quantities referred to in the Conditions of Contract.

5. The method adopted in the preparation of bills of quantities shall be adopted for re-measurement of completed works.

6. Works have been measured net as fixed in position and each measurement shall be taken to the nearest 10millimeters.

7. Items in the preamble section of this bill of quantities are deemed to qualify and to form part of every description of measured work to which they refer including composite items.

8. The Contractor shall not use this-Bill of Quantities as a Construction programme or for the purposes of ordering materials or arranging Sub-Contracts. The references for these activities shall be the drawings, specifications and instructions issued by the Engineer.

9. The descriptions in the Bills of Quantities are for identification purposes only and the Contractor is referred to the Drawings, Specifications and Schedules for complete information regarding all relevant descriptions, quality, dimensions, capacities, design parameters and the like.

10. These pricing preambles are a standard and comprehensive set and hence may exceed the requirements of this particular project.

11. The Quantities given in the Bill of Quantities are estimated only and are intended to give an indication of the extent of the work to be carried out. Payment will however be made on Measure and pay basis.

12. The Quantities set out in the Bill of Quantities are provisional and cover the approximate scope of the work, which is anticipated to be performed by the Contractor.

13. The rates and prices entered in the Bill of Quantities shall, except in so far as it is otherwise provided under the Contract include cost of all constructional plant, supervision, materials erection and maintenance, duties/levies together with all general risks, liabilities and obligations as set out or implied in the Contract.

14. The rate or price shall be entered against each item in the Bill of Quantities, whether quantities are stated or not. The cost of items against which Contractor has failed to enter rate or prices shall be deemed to be covered in other rates and prices in the Bill of Quantities.

15. The whole cost of complying with the provisions of the Contract shall be included in the items provided in the Bill of Quantities and where no items are provided the cost shall be deemed to be distributed among the rates and prices entered for the related items of work.

16. General directions and descriptions of work and materials are not necessarily repeated nor summarized in the Bill of Quantities. Reference to the relevant sections of the Contract Document shall be made before entering prices each against item in the priced Bill of Quantities.

17. Provisional sums included and so designated in the Bill of Quantities shall be expended in whole or part at the direction and discretion of the Engineer in accordance with the stipulation made under General Conditions of Contract and/or Particular Conditions of Contract.

18. Where the determination for payment purposes of the quantity of any item of work depends upon the measurement of existing features or ground levels and the like, then prior to carrying out any operations which might affect such measurement, the Contractor shall first take such levels and measurements as the Engineer may direct and, after the Engineer has had the opportunity to check the same, they shall be certified as agreed by both the Engineer and the Contractor. In the event that the Contractor fails to observe the above procedure, the Engineer shall determine the quantity to be assumed for payment purposes using the best information available to him, and his decision in the matter shall be final.

19. Tenderer should visit the site and acquaint themselves with all existing conditions, the nature and extent of work to be done under this contract ascertaining the conditions governing access to the site, the extent of work and accordingly include for, in their prices

20. The following abbreviations are used in the Bill of Quantities and shall carry the meanings as listed hereunder:

Sq.ft - Square feet
cm - Centimetre
L.Ft - Linear feet
Sqrs - Squares
Mm - Millimetre
m - Liner meter
m^2 - square meter
m^3 - cubic meter
kg - Kilogram
t - metric ton
pr - Pair
nr - Number
hr - Hour
P.S. - Provisional sum
BOQ - Bills of Quantities
BS - British Standard

Prices also deemed to include:

1. Rate shall be comprehensive and include for the following:

a) All obligations imposed by the Contract.
b) Complying in every respect with the requirements and the consideration of the specifications and drawings.
c) All considerations arising from the definitions incorporated into each preamble section.
d) Labour for fixing and all associated costs.
e) Materials and goods & all associated costs.
f) Fixing and or fixing materials and goods in any position, hoisting to any height.
g) Use of scaffolding, plant, equipment and tools
h) Any additional labour usually associated with measured items.
i) All necessary protection of the works, removing all casings and temporary coverings and making good and clearing away upon completion.

2. All measurements are net and the rates shall include for laps, waste, working space and trade or traditional allowance.

3. The pricing of materials shall take account of the following:
a) Pricing Preambles, Drawings and Specifications shall apply reciprocally between sections of the works unless otherwise described.
b) Materials shall be of the best quality available unless otherwise described.
c) All materials shall be transported, handled, stored and fixed in accordance with the printed instructions or recommendations of their manufacturer or suppliers.
d) Protection of completed work, all casing and temporary coverings and making good and clearing away upon completion. Building paper, damp proof membrane, quilts and all non-rigid sheet materials shall include cutting or forming holes and notchings and-extra labour of turning up at edges and the like.

4. Duct shall include draw wires.

5. Holes, mortices, pockets, grooves, chases and the like and items described as "built in" and "cast in" shall include making in its fullest sense and through, around, into, over and up to the items concerned. '

6. Items described as "cut" shall include general making good similarly.

7. Where the word "allow" is used the cost of the items shall be the responsibility of the Contractor.

8.The Contractor shall obtain from all sub-contractors (where nominated or not) their requirements for all recesses, chases, holes and the like in order that they may be built in or formed as the work proceeds. No additional charges shall be allowed for cutting recesses, chases and holes and the like after the construction of the works.

9. In the event of their being any discrepancies between details on drawings, descriptions in specifications and descriptions in the bills of quantities then the rates and pricing shall be deemed to relate to the documents order of precedence set out in the Form of Agreement.

10. The amounts set against any items of profit shall include for all costs in connection with letters of credit, bank charges, interest charges and insurance after the materials come under the control of the Contractor.

11. The contractor should leave the whole of the works ready for immediate occupation to the satisfaction of the Engineer including the following:
a) Cleaning and touching up the buildings both inside and out, leaving all surfaces free of cracks, blemishes or splashes.
b) Easing, oiling and adjusting and making good of finishes to all fittings, doors, windows, ironmongery and the like.
c) Cleaning and polishing all marbles, glasses, anodized aluminium and sanitary ware, including the removal of all protective coverings, paint splashes and the like. Replacement of all or any chipped, cracked or broken items.
d) Balancing of air conditioning installation where applicable
e) Removal of rubbish, debris or excess spoil from the site area and raking over and cleaning all unused parts of the site area.

Fix Only:

The expression "fix only" used in these Bills of Quantities means that the Contractor shall provide the following facilities:
a) Fixing shall be understood to include unloading, storing, distributing and hoisting the goods and materials.
b) Supplying full size templates, giving and "marking dimensions and taking responsibility for their accuracy.

c) Getting in, protecting, handling, distributing and placing in position and assembling as required.
d) Casing-up and protection, including clearing away protection on completion of the works including sub-contractors' works
e) Full costs of replacement of any items, which are damaged, broken, lost or stolen after the acceptance of the items from the supplier or Employer and until handing over the complete works.
f) Other necessary and usual facilities and documentation.

Supply Only:

The expression "Supply only" used in these Bills of Quantities means that the Contractor is provide for everything as defined in relevant method of measurement in connection with such items .except fixing in position. Supply only" shall further include:
a) Labour and all associated costs
b) Materials, goods and all associated costs
c) Provision of plants
d) Temporary works
e) Establishment charges, overheads and profits

3.a.3.2 SITE-PREPARATION:

3.a.3.2.1 Extent of site clearing shall be determined by the Engineer. No payment shall be made for additional quantities unless the Engineer expressly required.

3.a.3.2.2 No trees shall be removed without consent of the Engineer.

3.a.3.3 EXCAVATION & EARTHWORKS

3.a.3.3.1 Prices also to include:

Rates for excavation shall be deemed to include for the following.
a) Excavating by whatever means are necessary including hand excavation in any kind of ground except rock and boulder rock.
b) Leveling bottom of excavations.
c) Trimming or grading ground to produce level surfaces or surfaces to falls or slopes.
d) Compacting to bottom of excavation and to filled surfaces
e) Keeping free from water including any dewatering as necessary.
f) Any hand excavation required around existing services or the like.
g) Testing the bottom of excavations for foundations as instructed.
h) Testing compaction on filled surfaces where necessary
i) Backfilling with selected excavated material unless measured otherwise.
j) Removing surplus excavated material from the site and dumping at approved location. Contractor shall arrange and obtain necessary permission from relevant authorities for disposal and dumping of earth.
k) Contractor shall provide' due protection to avoid any damages to temporary work, any new or old structures during excavation.
l) Necessary Planking and strutting
m) Working space if required
n) Bulking after excavation.
o) Excavating at any height or any depth

3.a.3.3.2 The rates for excavation of trenches for services, pipes or drain pipes shall include for deepening and widening as necessary to enable the barrels of pipes, ducts, etc., to rest on firm ground and to facilitate jointing:

3.a.3.3.3 The rates for items of imported fillings, graded gravel fillings etc, shall include for:.

a) Leveling and compacting as required by the specification
b) Grading to slopes and falls
c) Special compacting to form vertical or battering faces
d) Forming sinking

3.a.3.3.4 Volume of excavation for pile cap shall be measured as shown in drawings, but deduction shall be made for the volume, already excavated for pile hacking under previous contract.

3.a.3.3.5 The rate for filling with excavated material is deemed to include for using existing excavated material at the site.

3.a.3.3.6 Excavating top soil is carried out, if the Engineer expressly required only.

3.a.3.3.7 Contractor shall provide 10 years guarantee for anti-termite treatment.

ROCK EXCAVATION

Rates for rock excavation shall be strictly as per specifications and to be priced accordingly.
Rates for rock excavation shall include for whole process as per specifications and leveling of the bottom etc., by using approved equipment.
The contractor shall forward the method statement and obtain prior approval from the Engineer.
Rate shall include for cart away weathered rock to waste as directed.
Useful hard rock can be used for construction work with price adjustment, or delivered to the officer in charge.

3.a.3.4.1. DISPOSAL OF EXCESS MATERIAL

All excess material shall be disposed as directed by the Construction Supervisor in Charge. Unsuitable material that is excavated shall be removed from the site. All dumped excess material shall be spread in a manner not to interfere with the drainage pattern of the area and affect other local environment. Plantation and other necessary measures shall be taken after the proper disposal of excess materials at a specified disposal area to protect the environment.

3.a.3.4.2. BORROW EXCAVATION

This work shall consist of excavation of suitable materials from approved borrow areas, including those within the right-of-way for the construction of embankments.

During borrow excavation the borrow areas shall be kept drained as far as possible and all necessary precautions shall be taken to prevent any erosion or interference with existing drainage facilities. Borrow operations should be carried out in a manner not to affect the stability or safety of any structure or cause any other damage to adjacent property.

The working of borrow areas within the right-of-way shall be subject to the approval of the Technical Agent. No borrowing shall be done below the level of the toe of the embankment. All suitable material removed from borrow sources shall be used as directed. On completion of borrow operations, borrow area shall be left in a neat condition with proper drainage.

3.a.3.5. EMBANKMENT CONSTRUCTION (ROAD FILL)

This work shall consist of the construction of embankment with approved material obtained either from the excavation of the roadway, borrow pits or other sources.

Materials

Embankment material shall be suitable material soil having a maximum dry density under standard conditions of compaction not less than 1500 kg/m^3.

All suitable material available from the roadway and other excavation shall be used for embankment construction. Where additional material is necessary they shall be obtained from approved borrow pits or other approved sources. The embankment shall be set put as required. The pegs or stakes showing the limits of embankment shall be fixed a suitable distance outside the actual limits of the fill.

The embankment material shall normally be placed in layers not exceeding 225 mm loose thickness, for compaction using 8-10 tonne smooth wheel roller. The embankment fill shall be compacted at or near the optimum moisture content.

The moisture content of the material shall be checked at the time of compaction and at the rate of one test per 500 sq.m. of surface. If the material is too wet it shall be dried by a aeration and if it is too dry the material shall be sufficiently wetted prior to compaction. Each successive layer shall be placed only after the degree of compaction of previous layer has been tested and found satisfactory. In the alternative each successive layer has been compacted using a specified number of passes of the roller as had been determined by field trails. Rolling shall commence at the edges and proceed towards the centre, except at super-elevated sections where the rolling shall commence at the lower edge and proceed towards higher edge.

Degree of compaction of Embankment Fills

The top 300 mm of the embankment shall be compacted to density not less than 100% of the maximum dry density and the lower layers of embankment and the embankment foundation shall be compacted to a density not less than 95% of the maximum dry density as determined by the standard compaction test specified.

In the alternative, the degree of compaction shall be assessed by the number of passes of the roller. However, random tests shall be carried out to determine whether the specified degree of compaction has been achieved. If the result of any test shows that the density is less than what is required, further compaction may be carried out.

3.a.3.6. GRAVELLING OF ROAD

This work shall consist of the gravelling of roads.

The materials used shall be gravely soil.

Grading requirements for soils for gravel surfacing is given below;

Seive Size mm m	Percentage Passing
37.5	100

19	75 - 100
4.75	40 - 100
2.36	30 - 80
600	18 - 50
75	5 - 25

Consistency limits for soils for gravel surfacing is given below;

Climatic Zone	Liquid Limit	Plasticity Index
Wet zone	Less than 40	4 – 15
Dry zone	Less than 50	6 - 25

The following shall be carried out prior to gravelling

The embankment to be gravelled, shall be cleared of all extraneous matter and the surface irregularities such as potholes, ruts and depressions corrected as required. Places of failure shall be examined for the cause of failure and corrected suitably either by excavating and filling of by filling over as appropriate. Any loose material requiring removal shall be removed. The surface shall be graded and recambered. The surface shall be moistened before the placement of new gravely soil.

The gravel shall be spread over the prepared embankment to a uniform thickness, which will give the required thickness when compacted.
The gravel shall be compacted , by using a 8-10 tonne steel wheeled roller, at or near the optimum moisture content. The moisture content of the material shall be checked at the rate of one test per 500 sq.m. of surface. If the material is too wet it shall be dried by aeration and if it is too dry water shall be sprinkled and mixed uniformly prior to compaction. Rolling shall commence at the edges and proceed towards the centre, except at super elevated sections of the road where the rolling shall commence at the lower edge and proceed towards the higher edge. The rolled surface shall be checked transversely and longitudinally with straight edges and camber boards and any irregularities corrected by loosening the surface, adding or removing necessary amount of gravel, and re-compacting the same until the entire surface conforms to desired camber and grade. The gravel shall be compacted to at least 100 percent of the maximum standard dry density of the materials as determined by the standard compaction tests carried out, three tests for a kilo metre road length.

3.a.3.7. PIPE CULVERTS

This work shall consist of supplying, jointing, bedding of reinforced concrete pies of the required type, diameter and length in the construction of culverts. The work also includes the construction of headwalls, wingwalls and other ancillary items necessary for completion. All works shall be carried out to lines, levels and dimensions shown in drawings.

Concrete for pipe bedding shall be 1:3:6 (40) cement concrete. Materials used for construction of head walls. Wingwalls and other ancillary items shall conform to the requirements given for RR masonry and cement concrete in this specifications.

Excavation for pipe culverts shall conform to the requirement of section 2.1 of this specification. Trench when shaped and competed to receive the pipes shall be of sufficient width, depending on pipe size and other considerations, to provide working space for satisfactory bedding, laying and jointing of the pipe and for satisfactory compaction of bedding material and backfill. Provision shall be made, as necessary, to drain the trench and bedding during construction. When completed the bottom of the trench shall be firm over its full length and width.

Where the soil encountered at the designed grade is unsuitable material shall be removed and replaced with approved foundation fill material and compacted as required.

The pipes shall be bedded as shown on drawing; of mix proportions 1:3:6(40) having a minimum base thickness of 300mm. The concrete shall extend up the sides of the pipe as shown on drawings.

Prior to placing of the pipes the soil bed shall be lightly scarify and moistened to facilities uniform embedment and where necessary, fresh soil shall be added so that the pipes when placed are firmly and uniformly bedded into the soil.

Laying of pipes on prepared foundation shall be started at the outlet and proceeded towards inlets, with the abutting sections properly matched and fitted in. Where collars are used for jointing the pipes, cross trenched shall be excavated to accommodate the collar and to facilitate jointing. Ends of the pipe shall be carefully cleaned before they are placed. As each length of pipe is placed, the mouth of the pipe shall be protected to prevent entry of earth or bedding materials. Once laid the pipes shall be properly aligned.

Each pipe joint shall be sealed to prevent leakage and infiltration of water on to the bedding. Abutting ends of adjacent pipes shall be connected with concrete collars and the space between the pipe and the collar shall be tightly sealed with stiff 1:2 cement mortar, to uniform thickness round the pipe.

In the case of spigot and socket pipes, where a pipe with spigot at one and socket at the other are jointed with pipe of same type and size, the spigot of one pipe shall be inserted into the socket of the other with the flexible joint ring fitted at the spigot end, and where a mortar joint is specified, cement mortar of 1q:2 composition shall be worked into he joint by hand.

Backfilling shall be undertaken as early as practicable after concrete and jointing material has sufficiently hardened . Work shall be carried out according to section 102 of this specification.

3.a.3.8. RANDOM RUBBLE MASONRY

This work shall consist of construction, in Random Rubble (RR) Masonry of walls, foundations, drains and other structures. Work shall be carried out to the lines and dimensions shown in the drawings.

Stones used in Random Rubble Masonry shall be obtained from approved quarries. They shall be hard, durable, fresh rock free from fractures and other imperfections, and shall be of maximum dimension not exceeding 450mm.

Cement mortar used shall normally consist of Ordinary Portland cement, sand and water in the proportions specified. Mortar shall be mixed thoroughly by hand until its colour and consistency are uniform. It shall be mixed in small quantities only as an when required and shall normally be used within 30 minutes of mixing, Mortar, which had been mixed for more than one hour and showing signs of hardening, shall be discarded.

All stones, chips and spalls used shall be of clean surfaces to facilitate adherence of mortar to them and shall be wetted before laying. Every stone shall be set flush in cement mortar of 1:6 or and other approved mix proportions and there shall be no dry work or hollow spaces left. Smaller stones shall be used to roughly fit the spaces between the larger stones and ships/ and spalls shall be wedged in where necessary to prevent thick beds of mortar. The stones in each course shall overlay the joints in the preceding course as far as practicable. A sufficient number of through stones shall be used in building walls. At least one through stone shall be built into walls at intervals of 2 m horizontally and 600 mm vertically.

They shall run through the full thickness of the walls, which are up to 600 mm in thickness, In case of walls exceeding 600 mm ion normal thickness, more than through stones shall be used to run through the full thickness of the wall. In such cases the overlap shall not be less than 150 mm.

Where the faces of walls are to be plastered, their joints shall be raked to depths of 12 to 20 mm to form a key and the pasting shall be done using cement mortar of specified proportions and to the specified thickness. The faces, which are not to be plastered, shall be provided with struck off joints unless otherwise specified. In the latter case selected stones shall be used with straight edges as far as practicable, to provide close fitting joints of uniform width not exceeding 20 mm. The bushing of the stones shall not project more than 25 mm from the plane of the joints.

Where pointing of joints is specified they shall be carried out as given in the drawings or as directed.

Vertical construction joints in walls shall be avoided and at horizontal or sloping construction joints the mortar in the last course at the joint shall be omitted, for at least half the nominal thickness, to be later placed with the succeeding course of masonry.

When placing rubble masonry on or against construction joints all laitance shall be removed from exposed hardened mortar surface ; any further edges and hardened mortor shall be removed from exposed stone surfaces.

Where rubble masonry is placed against a fill or excavation, surfaces irregularities in such surface shall be filled with stone ships, spalls or other free draining materials. Drains and formed wheepholes shall be constructed as shown in the drawings.

All rubble masonry work shall be maintained in constantly wet condition for a period of at least 3 days commencing from the time of final setting of the cement.

3.a.3.9. CEMENT SAND RENDERING

20 mm thick with 1:3 cement sand mortar.

This work shall consist of rendering of the exposed faces of random rubble masonry walls.

Cement shall be Portland cement, and cement sand mortar shall conform to the requirements outlined in above section 2.8 - Random Rubble Masonry.

The mortar shall be composed of one part of cement and three parts of sand by dry loose volumes and sufficient water to make a mortar that can easily be handled and towelled, hand smooth and finished with wooden float to give a true and even surface with all arises square and internal angles slightly rounded. Re-tempering of mortar that has been used in excess of 30 minutes, will not be permitted.

3.a.3.10 CONCRETE WORK

3.a.3.10.1 Concrete:

(i) The rates for concrete works shall include for the following:

a) Concrete test cubes as instructed by the Engineer and testing costs
b) Rate shall include for plant for mixing, handling, hoisting, depositing, compacting, vibrating, curing and making good after removal of formwork.

c) Forming construction joints or the like
d) Forming joints between new concrete and existing concrete unless otherwise measured separately.
e) Shuttering to sloping upper surfaces not exceeding 15 degrees from horizontal
g) All necessary keys to concrete surfaces to receive in-situ finishes
(h)All costs in connection with the construction of "kickers”
(i) Providing admixtures if required
j) The rates for blinding shall include for the following.

i) All necessary shuttering to edges or extra volume of concrete used in lieu of formwork.
ii) Forming sloping upper surfaces where required.

(ii) All concrete works shall comply with the relevant specifications, filled into formwork and well packed around reinforcement.

(iii) Concrete items are deemed to include projections, nibs, fillets and external splays

(iv) Concrete in suspended slabs is deemed to include up stand curbs

(v) Proportioning of Concrete Materials and Strength

Mix Proportions and Strengths

The mix proportions and compressive strengths are given below. The mix proportions are indicated by the volumetric ratios of cement; fine aggregate’; coarse aggregate. The concrete to be used in any locations in specified on the Drawings by the mix proportions followed by the nominal maximum size of coarse aggregate in brackets.

Mix Proportions	**Nominal Maximum Size of Coarese Aggregate (mm)**	**Mean Cube Strength at 28 daysN/mm²**	**Minimum Cube Strength at 28 daysN/mm²**
1:4:8	37.5	12	8
1:3:6	37.5	17	13
1:2:4	37.5	23	17
1:2:4	20	28	20
1:1.5:3	20	29	21
1:1.5:3	10	29	21

An additional 1o percent of cement over and above the specified mix proportion shall be used when hand nixing is done. The water / cement ratio by weight shall not exceed 0.55.

Workability of concrete

The workability or consistency of fresh concrete shall be such that the concrete is suitable for the conditions of handing and placing so that after compaction it surrounds and grips all reinforcements and completely fills the form work.

The degree of workability shall depended on the nature of work and the method of placement; whether with vibration or without vibration.

For purposes of these specifications the degree of workability shall be classified as low, medium and high and shall normally be assessed by means of the slump test.

Generally accepted values of slump, in relation to the degree or workability and the aggregate used, are given in table below.

Degree of Workability	**Nominal max. size of aggregate (mm)**	**Slump (mm)**
Low	12.5 20 37.5	0-12 12-25 25-50
Medium	12.5 20 37.5	12-25 25-50 50-100
High	12.5 20 37.5	25-75 50-125 100-150

Testing of Concrete for Acceptance

General

Concrete shall be tested by determining the crushing strength of 150 mm cubes at 28 days. Where so required, an early assessment of the 28 days strength shall be made by carrying out tests at 7 days on the assumption that 65% of the 28 days strength is achieved in 7 days.

(vi) Hand Mixing

Hand Mixing where permitted, shall be carried out on a smooth watertight platform large enough to allow efficient turning over of the constituents of concrete before and after adding the water. Mixing platform shall be so formed that no foreign material gets mixed up with the concrete and the mixing water does not flow out of the mixing area.

(vii) Placing and compaction of concrete

Prior to placing of concrete all formwork and reinforcement therein shall be cleaned of all extraneous material and dust and made fee of any standing water. It shall be ensured that all formwork is made leak proof and that there is no loss of mixing water or grout from the concrete.

All mixed concrete shall be placed and compacted in the formwork, using approved vibrators of the internal, external or screed types, or combinations there of depending on the type of job. Where approved, steel rods may also be used for the purpose in addition to the vibrators. The adequacy of the compacting equipment or the suitability of the compacting method shall be determined depending on the requirements. Use of steel roads only for compaction shall be restored to only in small jobs and in low strength concretes.

In all cases of continuous concreting, fresh concrete shall be placed before the already laid concrete isles than 30 minutes old and where this time gap is exceeded a construction joint shall normally be formed prior to continuing with the concreting. All concrete shall be placed and compacted in horizontal layers normally not exceeding 300 mm in depth except where internal vibrators are used when the depth may be increased up to a maximum of about 450mm.

No concrete shall be dropped from a height greater than about 1.5 meters. Where chutes are used for placing of concrete they shall be kept clean and used in a manner to prevent segregation. When concreting has to be resumed on a surface, which has hardened, it shall be roughened, swept clean thoroughly wetted and covered with a thin layer of cement grout or cement mortar as approved. Semi-hardened surfaces shall be well brushed to remove all laitance, cleaned and covered with a thin layer of cement grout prior to overlaying with fresh concrete.

(viii) Curing of Concrete

Freshly laid concrete shall be kept undisturbed and protected form the effects of sun and rain from drying out till it hardens. Once hardened, the concrete shall continuously be cured in a moist atmosphere for a minimum period of 7 days and for a further period if so specified.

3.a.3.10.2 Formwork

(i) The rates for formwork shall include for the following:

a) All cutting and waste including raking, curved or circular cutting.
b) Setting up strutting and supporting at any height above the structure subject to any limitations imposed by the Engineer including all props, stays, struts, wedges and bolts etc.
c) Coating of shutter oil
d) Easing; striking, removing and cleaning the surface of concrete.
e) Overlaps and passings at angles and labour at intersections
f) Shortening struts or shapes and re-strutting or re-shoring where required.
g) Rubbing down, filling and making good the surface of concrete after removal of shuttering.
h) Cutting or notching shutters or moulds to in-situ or precast concrete around projecting reinforcement.
i) Scaffolding if necessary
j) Formwork has been measured the net contact surface between concrete and formwork.
k) Formwork to beams, columns and casings deemed to include ends.

(ii) The rates for wrought shuttering/ shuttering to produce a special finish shall include for the following.

a) Any necessary rubbing down or filling allowed by the specification to produce the finish required.
b) Cutting out and re-casting unsatisfactory work or work not fulfilling the requirement of the specification or carrying out remedial or any other work required by the Engineer as an alternative to cutting out substandard work.

(iii) Removal of Formwork

The formwork shall be so removed as not to caused any damaged to concrete due to shock or vibration.

Time of Removal

In no circumstances shall forms be struck until the concrete reaches a strength of at least twice the stress to which the concrete may be subjected at the time of strike. Where possible, the for as long as possible, as it would assist curing, Forms shall be eased out carefully in order to prevent the load being transferred

suddenly to the partly hardened concrete.

In the case of other construction as an indication, only the minimum period between the completion of concreting and the removal of frame work shall be taken as follows:-

Vertical Faces to Mass Concrete	-	24 hours
Vertical Faces to Reinforced Concrete	-	24 hours
Support to soffits of beams	-	14 days

3.a.3.10.3 Reinforcement

(i) Reinforcement bars should comply with specifications in BS 4449: 1988 and mesh reinforcement with BS 4483: 1985. Steel reinforcing bars considered in the design are high yield strength bars for diameters 10, 12, 16, 20, 25; the characteristic strength should be 460 N/mm2.

(ii) Detailing is prepared on the assumption of the use of 6m bar lengths.

(iii) 6mm diameter bars shown in reinforcement details are mild steel. (fy=250 N/mm2)

(iv) The rates for bar reinforcement shall include for the following:

a) Positioning and protecting starter bars
b) Straightening (if required), cutting to length and bending reinforcement to required shape.
c) Cleaning and wire brushing
d) Supporting in position (chairs etc) during concreting (excluding links and stirrups)
e) Binding wire, ties and distance pieces.
f) Additional cutting and bonding in connection with holes, mortices, pockets, grooves, chases and the like.
g) Bends, hooks and laps shall be measured with the quantities.
h) Preparation of bar reinforcement schedule for Engineer's approval before starting the work.

(v) The rates for mesh reinforcement shall include for the following:

a) Straight, raking, curved and circular cutting and waste, bending to profiles and laps as required by the drawings and specifications.
b) Supporting in position during concreting (excluding special chairs), binding wires and distance pieces.
c) Cutting, bending and notching around all obstructions.

(vi) For the purpose of measurement length of bar shall be considered as 6000mm.

(vii) Spacers for achieving Cover to Reinforcement;

Specified concrete cover to reinforcement bars should be provided using cover blocks. Chairs should be used to support top horizontal reinforcement and to separate vertical reinforcement in walls.

3.a.3.10.4 Pre-Cast Concrete:

(i) The rates for pre-cast concrete shall include for the following:

a) Provisions of moulds
b) Forming a fair face finish in accordance with the specifications
c) Hacking or forming keys to all other surfaces
d) Lifting hooks or other devices approved by the Engineer for positioning
e) Hoisting and fixing in position to approval of the Engineer.
f) Bedding jointing in mortar as specified.
g) All necessary temporary struts or supports
h) Sills and copings etc. shall include for plain ends and angles where necessary.

3.a.3.11 WATERPROOFING:

3.a.3.11.1 The rates for work in this section shall include for the following:

a) Remove all loose and foreign materials and clean surface to receive water proofing materials.
b) Laps, seams and narrow widths, straight, raking curved and circular cutting and all consequent wastage, fillets, arises, angles, chases for tucking in etc., returned ends and dressed ends on flashings, dressing up over up stands and around and into gargoyles, rainwater outlets, vent pipes and the like.
c) Any additional or special materials at construction joints, expansion joints, edges and corners etc.
d) Repairing surface cracks and filling uneven surface with approved materials.
e) Base screed, temporary screed and protection screed unless measured separately.
f) Tropical grade mastic pointing to all wall flashings.
g) Testing as per Engineer's Instructions
h) Work to be done as per standard details necessary for complete system but not measured.
i) Providing all necessary tools and any other equipment required as recommended by the manufacturer.
j) Providing product samples, finished specimen areas etc., as required by the Architect
k) Forming or chasing groves, into masonry walls, concrete walls, concrete walls and slabs rebates etc., where necessary and turning waterproofing materials into chases and pointing as specified
l) Lining to rain water outlets, cesspools, brackets, collars and filling around pipes, railing standards and the like
m) Cutting to line and jointing new to old asphalt
n) Obtaining manufacturer’s supervisory/consultancy services if necessary and providing and acceptable guarantees for 10 years in the name of the employer for the product and the workmanship.
o) Submitting a detailed set of shop drawings approved by manufacturer to incorporate all construction and expansion joints as shown in drawings, structural and services elements, other details encountered in the areas to be waterproofed and with details against settlements between two buildings with reference to manufacturer’s proprietary details, specials and techniques. The arrangements shown in tender drawings are for proposes of guidance only and not construction drawings.
p) Working at any given height.
q) Application of water proofing materials to specifications and manufacturer’s recommendation and as per approved shop drawings to cover all surfaces including angle fillets, chasings, sealing of construction joints and expansion joints, settlements joints etc.

r) Submitting pre-shipment certificates by an acceptable international Surveyor certifying the product with respect to :-

i. Source and country of manufacture.
ii. Country of Origin
iii. Conformity to specification
iv. Conformity to system offered
v. Conformity to the product offered.

Governance for Local Economic Development Programme

BOQ-SUMMARY SHEET

PROJECT TITLE	**RENOVATION OF ICE CUBE MAKING UNIT IN KALUWANKERNY**
PROJECT NO	**BAT/SDDP/87393/005/07**
PROJECT LOCATION	**KALUWANKERNY**
DISTRICT	**BATTICALOA**

ITEM #	DESCRIPTION	AMOUNT -(Rs)	AMOUNT -(Rs)
1	PROVISIONAL SUM FOR PRELIMINARIES		
2	SERVICES		40,000.00
3	LANDSCAPING		
4	REPAIRS OF SHOPS		
5	IMPROVEMENT OF ICE PLANT AND STORAGE		
6	REPAIRS TO TOILET		
7	CONSTRUCTION OF CHAIN LINK(35m) AND BARBED WIRE FENCING		
	Sub Total 1 (Total of 3 to 7)		
	Discounted Amount ……% for Sub Total 1 (if any)		
	Sub Total 2 [(1+2+Sub Total 1) - Discount]		
	5% of Physical Contingencies of Sub Total 2		
	Bid Amount (Sub Total 2+ contingencies)		
	If a VAT registered Contractor Add-VAT (11%)		
	Bid Amount (including VAT)		

Bid Amount in Words (excluding /including VAT) : SLRs. ……

……

VAT Registration No (if available) ……

Signature and seal :……

Name of Bidder :……

Address :……

Date :……

RENOVATION OF ICE CUBE MAKING UNIT AT KALUWANKERNY

BILLS OF QUANTITIES

1. PRELIMINARIES

ITEM #	DESCRIPTION	UNIT	QTY	RATE	AMOUNT
1	**PRELIMINARIES** **All the Bidders are requested to refer "Pricing Preamble and notes below" and works items of this Bills of Quantities shall be priced to fulfill the requirements there-in. Also see that no page or items are missing prior to pricing the bill of quantities.**				
	The Bidder is advised to refer to the General Notes, Pricing Preambles, Drawings, Specifications, Conditions of Contract, Particular Conditions of Contract and other relevant documents prior to pricing the following items.	Note			
	The Bidder is advised to visit the site of the proposed work, as it is his responsibility to ascertain the conditions governing access to the site, and external working space, storage area etc.	Note			
	A list of typical general items are given below. However, the Bidder is requested to price only those items that may affect this Contract.	Note			
	Exsisting roads & culverts cannot take the passage of heavy vehicle or such in adquiate areas to be strenghten by the successful bidder, before make use of such areas, roads and approches.	Note			
	Any other preliminary items not listed below but deemed necessary for the successful execution of the project shall be included in the tender rates, as no claims for extra payments for such, would be entertained.	Note			
	All temporary works shall be dismantled and cleared away from the site on completion of the work.	Note			
	Contractor shall provide helmets, gloves, safety masks, dusk masks, eye goggles, boots etc. for the workmen.	Note			
	Contractor shall provide safety boards, signs and safety ribbons (plastic yellow and black stripes) to be erected at site.	Note			
	Contractor shall take special care for safety of school children, staff and public during transportation of materials and implementation of the contract.	Note			
	Mechanical plant and equipment which emits excessive noise, water, smoke, fumes, or obnoxious liquids, gases etc., will not be allowed to be used on the site. If the use of such machinery becomes necessary, the Contractor is expected to obtain prior approval.	Note			
	No work in any trade shall be carried out in such a manner as to cause any nuisance to adjacent owners or the public.	Note			
	The Engineer has the final decision as and when he deems it necessary for the Contractor to take precautions, maintain or repair such plant and equipment or order their removal from the site.	Note			

RENOVATION OF ICE CUBE MAKING UNIT AT KALUWANKERNY

BILLS OF QUANTITIES

1. PRELIMINARIES

ITEM #	DESCRIPTION	UNIT	QTY	RATE	AMOUNT
	The contractor shall be responsible for any loss or damage to the works, existing structures, adjoining structures and unfixed materials.	Note			
	The Contractor shall be responsible for necessary lighting, watchman and other suitable measures during construction until handing over	Note			
	Contractor shall be responsible for erection, shifting and maintaining of necessary protective netting, fencing, hording, screens at site and other precautions to the required standard and satisfaction of the Engineer.	Note			
	DRAWINGS UNDP/ BT/ RICM/LAY/ 001 (Layout plan) UNDP/ BT/ RICM/Ar/ 001 (Plan, Elevation and Section Ice Plant) UNDP/ BT/ RICM/DO/ 001 (Details of Doors &windows) UNDP/ BT/ RICM/IP/Str/ 001 (Lintol lay out,r/f details) UNDP/ BT/ RICM/IP/ELE/ 001 (Electrical layout) UNDP/ BT/ RICM/IP/FEN/ 001 (Chain link fencing) UNDP/ BT/ RICM/IP/FEN/ 002 (Barbed wire fencing) UNDP/ BT/ RICM/Ar/ 002 (Plan, Elevation and Section Shops) UNDP/ BT/ RICM/IP/DO/ 001 (Door details)				
1.01	**Provisional Sum** for site office for consultant - staff including necessary furniture, electricity, water & sanitary facilities to the approval of Engineer.	Allow		**Pro. Sum**	8,000.00
1.02	**Provisional Sum** for providing and maintaining a first aid box and regular supply of medicine, linen etc.	Allow		**Pro. Sum**	3,000.00
1.03	**Provisional Sum** for setting out of Works in accordance with drawings and other written information given by the Engineer.	Allow		**Pro. Sum**	2,000.00
1.04	**Provisional Sum** for all cost in connection with preparing samples for testing, making arrangemnts for testing of mataerials, goods etc., as stipulated in the specification, obtaining test reports and submitting the same to the Engineer.	Allow		**Pro. Sum**	3,000.00
1.05	**Provisional Sum** for provision of 3 sets of (hard copies and soft copies) As-Built drawings & maintanace manuals of all services for Enginner's approval.	Allow		**Pro. Sum**	6,000.00
1.06	**Provisional Sum** for providing all necessary safety measures to workmen at site such as helmets, gloves, safety masks, dusk masks, eye goggles, boots etc. conforming to the latest industrial safety regulations and as derected by the Engineer.	Allow		**Pro. Sum**	5,000.00
1.07	Supplying and fixing Name board 1.2m x 0.9m in dimension with 2nos 32mm dia G.I pipe to the approval of Engineer.	Allow		**Pro. Sum**	2,000.00
1.08	**Allow Sum** for providing a Performance Security	Allow		**Sum**	
1.09	**Allow Sum** for Insurance of Completed works.	Allow		**Sum**	
1.10	**Allow Sum** for Insurance against accidentsand injury to Contractor's personnel as per the contract	Allow		**Sum**	
TOTAL FOR BILL NO.01-PRELIMINARIES CARRIED TO GRAND SUMMARY				**SLRs**	

RENOVATION OF ICE CUBE MAKING UNIT AT KALUWANKERNY

BILLS OF QUANTITIES

2. SERVICES

ITEM #	DESCRIPTION	UNIT	QTY	RATE	AMOUNT
2.01	**Provisional Sum** for providing 3 phase electricity supply payable to C.E.B	Allow		**Pro. Sum**	40,000.00
TOTAL FOR BILL NO.02-SERVICES CARRIED TO GRAND SUMMARY				**SLRs**	**40,000.00**

RENOVATION OF ICE CUBE MAKING UNIT AT KALUWANKERNY

BILLS OF QUANTITIES

3. LANDSCAPING

ITEM #	DESCRIPTION	UNIT	QTY	RATE	AMOUNT
3	**LANDSCAPING**				
3.01	Clearing Land with removal of waste material as directed	Item	1.00		
3.02	Removing of all reeds,bushes at Lake and debris cleared away	Item	1.00		
3.03	Excavation of Lake further 900mm as specified places using excavator	Cu.m	120.00		
3.04	Supplying and Planting grass (Turfing) close to Lake and maintain until get root	Sq.m	400.00		
3.05	Supplying and laying galvanized PVC coated Gabion box size in 2.0m x1.5m x 1.0m with 800mm x 100mm size opening and 2.7/3.7mm wire dia with BS 1052-1980 tensile strength as directed	Nos.	4.00		
3.06	Supplying and laying Geotex on prepared surface	Sq.m	8.00		
3.07	Supplying and filling of 225mm -300mm size rubble in galvanized pvc coated Gabion box.	Cu.m	2.00		
3.08	Supplying and fixing used tyre fix with gabion box planting 2m long 20mm dia tor steel.to land boat easily	Nos	4.00		
TOTAL FOR BILL NO.03-LANDSCAPING CARRIED TO GRAND SUMMARY				**SLRs**	

RENOVATION OF ICE CUBE MAKING UNIT AT KALUWANKERNY

BILLS OF QUANTITIES

4. REPAIRS OF SHOPS

ITEM #	DESCRIPTION	UNIT	QTY	RATE	AMOUNT
	Demolishing/Removal				
4.01	Clearing inside the building removing all debris and cleared away	Item	1.00		
4.02	Removing damaged eaves gutter,down pipe and debris cleared away	Lm	15.00		
4.03	Removing damaged calicut pattern tiles and debris cleared away	Nos	40.00		
4.04	Removing damaged white playwood sheet and debris cleared away	Sq.m	8.00		
4.05	Removing damaged electrical wire and debris cleared away	Lm	15.00		
4.06	Removing damaged Switiches and debris cleared away	Nos	5.00		
4.07	Removing damaged glass from window and debris cleared away	Sq.m	3.00		
4.08	Removing damaged window sash and stack it site for reuse	Nos	4.00		
4.09	Removing damaged casement stays, fastner and draw ring	Nos	10.00		
4.10	Removing damaged pvc pipes and debris cleared away	Lm	20.00		
4.11	Demolishing 112mm brick work in front wall and debris cleared away from premise.	Sq.m	30.00		
4.12	Demolishing 75mm thick concrete floor .	Cu.m	1.00		
4.13	100mm thick 1:3:6(40mm) lean concrete in wall foundation.	Cu.m	0.50		
4.14	Random rubble masonry in cement and sand 1:5 mix upto D.P.C. Level.	Cu.m	1.50		
	Concrete				
4.15	100mm thick 1200mmx900mm cement concrete slab at counter r/f withY10@ 150mm crs bothways rate included r/f and shuttering	Sq.m	1.35		
4.16	1:2:4(20mm) cement concrete 225mmx125mm size in beam r/f with 2 nos Y12 and R6@ 175mm crs over doors rate included r/f and shuttering	Lm	7.00		
4.17	100mm thick 600mmx3000mm cement concrete shelving slab at counter r/f withY10@ 150mm crs bothways rate included r/f and shuttering	Sq.m	2.40		
	Brick Work				
4.18	225mm Brick work in 1:5 cement sand wall and support to concrete shelving	Cu.m	9.00		
	Doors and Windows				
4.19	Supplying and fixing of 1500mmx1200mm fixed glass FG1 with 100mmx75mm special class upper timber frame with 5mm thick clear glass and necessary timber beading (1 no)	Sq.m	1.80		
4.20	Supplying and fixing of 1200mmx1050mm size timber panneled window at counter W1 with 100mmx75mm special class upper timber frame with 32mm pannelled sash with necessary beadings locking device and pair of brass hinges with 4 nos 100mm long brss barrel bolt	Sq.m	1.26		
4.21	Supplying and fixing of Door D1 size in 975mm x 2100mm panelled single hung sash with 100mmx75mm frame 32mm thick sashes in teak or special upper class timber and approved quality fittings 1 1/2 pair of butt hinges 75mmx100mm and a union motice lock (England made) and two coats varnish and one coat of scaler (1 No)	Sq.m	2.05		

RENOVATION OF ICE CUBE MAKING UNIT AT KALUWANKERNY

BILLS OF QUANTITIES

4. REPAIRS OF SHOPS

ITEM #	DESCRIPTION	UNIT	QTY	RATE	AMOUNT
4.22	Supplying and fixing of Door D3 size in 600mm x 600mm ledged single hung sash with 100mm x 50mm timber frame 32mm thick sash in teak or special upper class timber and hasp staple and pad lock rate including 2coats of enamel painting(01no)	Sq.m	0.36		
4.23	Supplying and fixing of 5mm thick playwood sheet over wall up to roof level with 100mmx50mm uprights and 50mmx50mm runners in class-1 timber with necessary nails	Sq.m	9.00		
4.24	Supplying and laying of calicut pattern tiles	Nos	40.00		
4.25	Supplying and fixing of 5mm thick white playwood sheet over rafters in damaged places	Sq.m	5.00		
4.26	Supply and fixing heavy 250mm long brass Casement stays with brass screws	Nos.	5.00		
4.27	Supply and fixing heavy brass Casement fasterner with brass screws.	Nos.	6.00		
4.28	Supplying and fixing of brass draw ring.with brass screws.	Nos	8.00		
4.29	Supplying and fixing of 5mm thick glass with necessary timber beading.	Sq.m	3.00		
4.30	Supplying and fixing of 600mmx1200mm and 32mm thick glazed window sash only with necessary brass casement stays and casement fastners (4 nos)	Sq.m	2.88		
4.31	Flat Asbestos free fiber board ceiling fixed with clout haded nails to 100x50mm joist and 50x50mm bearers in special class timber including approved quality beading and moulding Rate to include for applying wood preservative to timber frame and two coats white emulsion paint to flat sheets and two coats enamel paint to beading and moulding as directed	Sq.m	18.00		
	Plastering				
4.32	16mm thick external plastering in 1:1:5 cement and sand mix finished semi rough	Sq.m	30.00		
4.33	16mm thick internal plastering in 1:1:5 cement and sand mix finished smooth.	Sq.m	30.00		
4.34	12mm thick rendering in 1:2 cement sand mix to counter slab and shelving slab in two sides	Sq.m	5.50		
4.35	10mm thick 1:3 Cement sand mix plastering in beam	Sq.m	9.00		
	Water Supply				
4.36	Supplying and fixing of pvc 100mmx100mm eaves gutter with pvc breakets	L.m	12.00		
4.37	Supplying and fixing of 90mm pvc down pipe with necessary brackets	L.m	15.00		
4.38	Supplying and laying 63mm dia 1000 type pvc pipe with necessary fittings including excavation and re-filling.	L.m	10.00		
4.39	Supplying and laying 32mm dia 1000 type pvc pipe with necessary fittings. including excavation and re-filling.	L.m	30.00		
4.40	Supplying and laying 40mm dia 1000 type pvc pipe with necessary fittings. including excavation and re-filling.	L.m	30.00		
4.41	Supplying and laying 25mm dia 1000 type pvc pipe with necessary fittings. including excavation and re-filling.	L.m	30.00		

RENOVATION OF ICE CUBE MAKING UNIT AT KALUWANKERNY

BILLS OF QUANTITIES

4. REPAIRS OF SHOPS

ITEM #	DESCRIPTION	UNIT	QTY	RATE	AMOUNT
4.42	Supplying and laying 20mm dia 1000 type pvc pipe with necessary fittings. including excavation and re-filling.	L.m	25.00		
4.43	Supplying and fixing 32 mm dia. pvc stop cock with necessary fittings. including excavation and re-filling.	No	1.00		
4.44	Supplying and fixing 63 mm dia. pvc stop cock with necessary fittings. including excavation and re-filling.	No	1.00		
4.45	Supplying and fixing 40 mm dia. pvc stop cock with necessary fittings. including excavation and re-filling.	No	1.00		
4.46	Supplying and fixing of 40mmx32mm (1 1/2"x1 1/4") single Phase water pump 16m suction and 18m Head 1.5 HP and 2000 gl/hr with 02 Nos union and necessary acceseries to fix in motor room.(L 140/1)	No	2.00		
	Electrical				
4.47	Supplying and fixing of ceiling fan with regulator, wiring and switches	Nos	5.00		
4.48	Supplying and fixing of 2 Coat wire in required places	L.m	6.00		
4.49	Supplying and fixing of pendant lamp holder in existing points	Nos	5.00		
4.50	Supplying and fixing 5 amp socket out let with all specials. Rate shall include for necessary wiring etc.	Nos	2.00		
4.51	Supplying and fixing Pendent Lamp with 23W CFL type lamp all specials. Rate shall include for necessary wiring etc.	Nos	5.00		
4.52	Supplying and fixing of 5Amp switch only in required places.	Nos	6.00		
4.53	Supplying and fixing of 3 phase 60Amp main switch MEM or equivalant in existing place.	Nos	1.00		
4.54	Supplying and fixing of single phase 30Amp main switch MEM or equivalant in existing place	Nos	1.00		
4.55	Supplying and fixing of 3 phase 60Amp trip switch crabtice type	Nos	1.00		
4.56	Supplying and fixing of single phase 30Amp trip switch crabtice type	Nos	1.00		
4.57	Supplying and fixing of 18way distribution box with ABC box and necessary circuit breaker	Nos	1.00		
4.58	Earth electrode 63mm dia G.I pipe 1800mm long and fixing .Rate shall include for necessary wiring etc.	No	1.00		
4.59	Supplying and fixing 7/053 twin wire 15 Amp to get connection from DB Box to motor.	L.m	20.00		
4.60	Supplying and fixing 7/085 twin wire from DB Box to CEB main.	L.m	40.00		
4.61	Removing of CEB main iron box and repairing with necessary welding and re-fix to install the CEB main switch	No	1.00		
4.62	Supplying and fixing of 23 W CFL bulb to existing point.	Nos	12.00		
	Painting				
4.63	Allow for applying two coats of white emulsion paint to all internal and external faces of wall	Sq.m	400.00		
4.64	Allow for applying one coat of white emulsion paint to asbestos sheet and one coat enamel to beadings.	Sq.m	40.00		
4.65	Allow for applying one coat of floor paint to plinth.	Sq.m	35.00		
4.66	Allow for applying one coat of enamel to valance board	Sq.m	40.00		
4.67	Allow for applying two coats of white emulsion paint to column and beam.	Sq.m	35.00		
4.68	Allow for applying one coat of varnish to all doors and windows.	Sq.m	30.00		
TOTAL FOR BILL NO.04-REPAIRS OF SHOPS CARRIED TO GRAND SUMMARY				**SLRs**	

RENOVATION OF ICE CUBE MAKING UNIT AT KALUWANKERNY

BILLS OF QUANTITIES

5. IMPROVEMENT OF ICE PLANT AND STORAGE

ITEM #	DESCRIPTION	UNIT	QTY	RATE	AMOUNT
5	**IMPROVEMENT OF ICE PLANT AND STORAGE**				
	EXCAVATOR				
5.01	Allow for clearing site including removal of debris bushes and extended up to premises of the land.	Sq.m	180.00		
5.02	Demolishing 75mm thick concrete floor .	Cu.m	1.5		
5.03	Demolishing 100mm thick r/f concrete shelving and debris cleared away.	Cu.m	0.6		
5.04	Demolising carefully existing 225mm Brick work and deberis cleared away	Cu.m	2.00		
5.05	Removing dameged timber sash in shelving and deberis cleared away	Sq.m	6.00		
5.06	Chipping demaged rendering and deberis cleared away	Sq.m	41.00		
5.07	Removing damaged electrical wire and deberis cleared away	L.m	10.00		
5.08	Removing damaged Switiches and deberis cleared away	Nos.	3.00		
5.09	Excavation for foundation of wall in any material met with except rock requiring blasting, part return fill in and ram and surplus disposed of as directed.	Cu.m	7.00		
5.10	Approved gravel filling under floor well compacted with water .	Cu.m	2.00		
5.11	Filling around the building approved quality of Gravel, spread, watered and well rammed.	Cu.m	6.00		
5.12	Supply and sperading of type 2 soil 300mm thick for 4.00m accese road	Cu.m	30.00		
5.13	Supply and sperading of Gravel 225mm thick for 4.00m accese road	Cu.m	20.00		
	CONCRETOR :				
5.14	100mm thick 1:3:6(40mm) lean concrete in wall foundation.	Cu.m	1.70		
5.15	75 mm thick 1:2½ :5 (25 mm) concrete in floor and in Front of Loading room.	Cu.m	2.50		
5.16	1:2:4 (20 mm) concrete in lintol.	Cu.m	1.50		
5.17	1:2:4 (20 mm) concrete in machineries pad.	Cu.m	1.00		
5.18	1:2:4 (20 mm) concrete in Ice plant plinth as per plan.	Cu.m	1.00		
	REINFORCEMENT:				
5.19	12mm dia tor steel in Lintol.	Kg.	50.00		
5.20	10mm dia tor steel in Lintol.	Kg.	40.00		
5.21	6mm dia mild steel links for Lintol.	Kg.	20.00		
5.22	10mm tor steel in Ice plant machine pad storage floor	Kg.	30.00		
5.23	10mm tor steel in Ice plant plinth.	Kg.	30.00		
5.24	Drilling of steel to columns for beam.	Item	1.00		
	FORMWORK:				
5.25	Form work in Lintol.	Sq.m	30.00		
5.26	Form work in Machineries plinth.	Sq.m	15.00		

RENOVATION OF ICE CUBE MAKING UNIT AT KALUWANKERNY

BILLS OF QUANTITIES

5. IMPROVEMENT OF ICE PLANT AND STORAGE

ITEM #	DESCRIPTION	UNIT	QTY	RATE	AMOUNT
	MASONRY WORK:				
5.27	Random rubble masonry in cement and sand 1:5 mix upto D.P.C. Level.	Cu.m	60.00		
5.28	225mm thick brick work in cement and sand 1:5 mix	Cu.m	31.00		
5.29	112mm thick brick work in cement and sand 1:5 mix	Sq.m	24.00		
5.30	Brick drains in cement and sand 1:5mix, 225mm wide and 150mm-225mm average depth including rendering 12mm thick cement and sand 1:2 mix to exposed faces with finished smooth including ramp of the same materials approx. 750mm wide all laid to approved slope.	L.m	30.00		
5.31	Brick drains in cement and sand 1:5mix, 225mm wide and 150mm-225mm average depth including rendering 12mm thick cement and sand to exposed faces with 1:2 mix finished smooth without ramp.	L.m	15.00		
	PLASTERING:				
5.32	16mm thick Plastering in cement and sand 1:5 mix to internal plaster finished smooth.	Sq.m	190.00		
5.33	16mm thick Plastering in cement lime and sand 1:1:5 mix to external plaster finished semi rough.	Sq.m	160.00		
5.34	Plastering in cement lime and sand 1:1:5 mix in narrow widths not exceeding 150mm wide including forming arises.	L.m	10.00		
5.35	12mm thick Rendering in cement and sand 1:2 mix neat cement floating to concrete floor.	Sq.m	9.00		
5.36	20mm thick Plinth plaster in cement and sand 1:3 mix finished smooth with Red colour neat cement floating.	Sq.m	15.00		
5.37	20mm thick Damp proof course in cement and sand 1:2 mix treated with two coats of hot tar on top and blended with sand.	Sq.m	12.00		
	IRON MONGER :				
5.38	Supplying and fixing G. I. sheet Roller shutter size in 2050mmx2400mm CD2 with necessary locking device including heavy pad lock 02 nos and 02nos handle as per plan (01No).	Sq.m	4.92		
5.39	Supplying and fixing G. I. sheet Roller shutter size in 1650mmx2400mm CD1 with necessary locking device including heavy pad lock 02 nos and 02nos handle as per plan (01 No)	Sq.m	3.96		

RENOVATION OF ICE CUBE MAKING UNIT AT KALUWANKERNY

BILLS OF QUANTITIES

5. IMPROVEMENT OF ICE PLANT AND STORAGE

ITEM #	DESCRIPTION	UNIT	QTY	RATE	AMOUNT
	H-DOORS AND WINDOWS				
5.40	Supplying and fixing of Aluminum door D1 size in 900mmx2100mm with section bar frame 5mm clear glass in top and in bottom 2 side of Alluminium gladding including 03 Nos Hinges necessary rubber beadings and good quality lock with barrel bolt and handle(02 Nos)	Sq.m	3.80		
5.41	Supplying and fixing of 2100mmx2100mm size Aluminium louvers consists section bar frame and 150mm long 100mm wide Aluminium louvers fitting in 75mm centers with necessary welding to fix in position.(02 Nos)	Sq.m	8.82		
5.42	Supplying and fixing of 1000mmx1200mm size Aluminium louvers consists section bar frame and 150mm long 100mm wide Aluminium louvers fitting in 75mm centers with necessary welding to fix in position.(02 Nos)	Sq.m	1.20		
	ROOFER AND ROOF PLUMBER				
5.43	Supplying and laying calicut pattern tiles	Nos	30.00		
5.44	Supplying and laying ridge tiles with 1:1:5 cement sand mix.	Nos	6.00		
5.45	Supplying, making and fixing valance boards of minimum of 20mm finished thickness and 250mm width in Ginisapu and completing with necessary iron screws, etc. including one coat of primer and two coats of enamel paint.	L.m	30.00		
5.46	Asbestos free fiber board under side ceiling with clout haded nails to 100x50mm joist (necessary places)and 50x50mm bearers in special class timber including approved quality beading and moulding Rate to include for applying wood preservative to timber frame and two coats emulsion paint to flat sheets and two coats of enamel paint to beading and moulding in processing room,Generater room and electrical pannel room.	Sq.m	35.00		
5.47	Asbestos free fiber board under side ceiling with clout haded nails to 100x50mm joist (necessary places)and 50x50mm bearers in special class timber including approved quality beading and moulding Rate to include for applying wood preservative to timber frame and two coats emulsion paint to flat sheets and two coats of enamel paint to beading and moulding in loading room.	Sq.m	13.00		
5.48	Supplying and fixing of Asbestos free fiber board under side ceiling to eaves with 50mm x 50mm runners including with necessary nails and two coats of white emulsion paint and applying two coats of wood preservative to timber	Sq.m	42.00		

RENOVATION OF ICE CUBE MAKING UNIT AT KALUWANKERNY

BILLS OF QUANTITIES

5. IMPROVEMENT OF ICE PLANT AND STORAGE

ITEM #	DESCRIPTION	UNIT	QTY	RATE	AMOUNT
	ELECTRICAL WORK:				
5.49	Supplying and fixing 5 amp socket out let with all specials. Rate shall include for necessary wiring etc.	Nos	5.00		
5.50	Supplying and fixing 15 amp socket out let with all specials. Rate shall include for necessary wiring etc.	Nos	6.00		
5.51	Supplying and fixing Pendent Lamp with 23W CFL type lamp all specials. Rate shall include for necessary wiring and switches etc.	Nos	13.00		
5.52	Earth electrode 63mm dia G.I pipe 1800mm long and fixing .Rate shall include for necessary wiring etc.	No	1.00		
5.53	Supplying and fixing MCB board with other specials (30 Amp main, 30 Amp Trip 16 way circuit breaker and ABC box)	No.	1.00		
5.54	Supplying and fixing 7/053 twin wire.	L.m	20.00		
5.55	Supplying and fixing 7/085 twin wire.	L.m	18.00		
5.56	Supplying and Fixing Ceiling fan 1200mm Sweep (Bajaj regal) with necessary wiring, Switches and regulator.	No	2.00		
5.57	Supplying and fixing of 60Amp 3 Phase MEM type main switch.	No	1.00		
5.58	Supplying and fixing of 60Amp 3 Phase trip switch.	Nos	1.00		
5.59	Supplying and fixing of Galvanized panel board 450mmx300mm size.	No.	1.00		
5.60	Supplying and fixing of Indicator lamp with necessary wiring.	Nos	3.00		
	WATER SUPPLY AND DRAINAGE				
5.61	Supplying and fixing 12mm PVC tap.	Nos	3.00		
5.62	Supplying and fixing 20mm PVC pipe (1000 type)	Lm	30.00		
5.63	Supplying and fixing 25mm PVC pipe (1000 type)	Lm	10.00		
5.64	Supplying and laying 32mm dia 1000 type P.V.C. pipe with necessary fittings.	L.m	15.00		
5.65	Supplying and laying 40mm dia 1000 type P.V.C. pipe with necessary fittings.	L.m	25.00		
5.66	Supplying and laying 63mm dia 1000 type P.V.C. pipe with necessary fittings including excavation and re-filling.	L.m	15.00		
5.67	Supplying and fixing 20mm Stop cock	Nos	1.00		
5.68	Supplying and fixing 40mm Stop cock	Nos	1.00		
5.69	Floor tiles 400mmx400mm coloured non skid floor ceramic tiles Lanka/Rocell or equivalent with all special corner etc. applied and fixed to floor including raking plastering and bedding in cement motor 1:2 mix to toilet in Ice plant and processing room.	Sq.m	35.00		
5.70	110mm dia CPVC 1000 type pipe extended from Sump to processing room with necessary specials.	Lm	12.00		
5.71	Providing 450mmx450mm Gully in concrete floor with necessary 1:2 cement sand mix rendering and in bottom 50mm thick 1:3:6(40)concrete.	Nos.	5.00		
5.72	Supply and fixing of drainage pit SS304 in Gully with necessary fittings and cement work.	Nos.	5.00		
5.73	Supply and fixing of 32mm dia(1")centrifugal water pump 0.75 HP with 2 Nos union and necessary fittings to sump.	Nos.	1.00		
5.74	Supplying and fixing 2000 Litter good quality PVC Water tank.	No.	2.00		

RENOVATION OF ICE CUBE MAKING UNIT AT KALUWANKERNY

BILLS OF QUANTITIES

5. IMPROVEMENT OF ICE PLANT AND STORAGE

ITEM #	DESCRIPTION	UNIT	QTY	RATE	AMOUNT
	DECORATOR AND PAINTER :				
5.75	Allow for applying two coats of emulsion paint to all internal and external faces of wall	Sq.m	390.00		
5.76	Allow for applying two coats of floor paint to plinth.	Sq.m	15.00		
5.77	Allow for applying two coats of white emulsion paint to column and beam.	Sq.m	32.00		
	Rest room				
5.78	Removing damaged Switiches and deberis cleared away	Nos.	2.00		
5.79	Wicket type door WD size in 900mm x 900mm consist 100x50mm frame vertically 50x25mm sash in 100mm interval including 150mm brass barrel bolt 2Nos and 2nos hinges as per plan (3Nos)	Nos	2.00		
5.80	Supplying and fixing of pendant lamp holder in existing points	Nos	1.00		
5.81	Supplying and fixing of 5Amp switch only in required places.	Nos	1.00		
5.82	Supplying and fixing 5 amp socket out let with all specials. Rate shall include for necessary wiring etc.	Nos	1.00		
5.83	Supplying and fixing Pendent Lamp with 23W CFL type lamp all specials. Rate shall include for necessary wiring etc.	Nos	1.00		
5.84	Supplying and fixing of 2 gang switch only in required place.	Nos	1.00		
5.85	Supplying and fixing of 23W CFL Bulb on existing point.	Nos	6.00		
5.86	Allow for applying two coats of white emulsion paint to all internal and external faces of wall	Sq.m	60.00		
5.87	Allow for applying one coats of enamel paint to valance board	Sq.m	15.00		
TOTAL FOR BILL NO.05-IMPROVEMENT OF ICE PLANT AND STORAGE CARRIED TO GRAND SUMMARY				**SLRs**	

RENOVATION OF ICE CUBE MAKING UNIT AT KALUWANKERNY

BILLS OF QUANTITIES

6. REPAIRS TO TOILET

ITEM #	DESCRIPTION	UNIT	QTY	RATE	AMOUNT
6	**REPAIRS TO TOILET**				
6.01	Removing of deberis in old toilet and clearing toilet with using harpic and water	Item	1.00		
6.02	Removing of damaged wash basin and deberis cleared away	Nos.	3.00		
6.03	Removing of damaged Commode and deberis cleared away	Nos.	1.00		
6.04	Removing of damaged squatting pan and deberis cleared away	Nos.	2.00		
6.05	Removing of damaged Casement stays and deberis cleared away	Nos.	3.00		
6.06	Removing of damaged Casement fasterner and deberis cleared away	Nos.	3.00		
6.07	Removing of damaged Asbestos sheet and deberis cleared away	Sq.m	6.00		
6.08	Removing of damaged door	Nos.	1.00		
6.09	Removing of damaged pvc pipes and deberis cleared away	L.m	12.00		
6.10	Removing of damaged Electrical wires and deberis cleared away	L.m	6.00		
6.11	Removing of damaged Switches and deberis cleared away	Nos	2.00		
6.12	Removing of damaged ceramic tiels and deberis cleared away	Sq.m	8.00		
6.13	Supply and fixing heavy 250mm long brass Casement stays with brass screws	Nos.	5.00		
6.14	Supply and fixing heavy brass Casement fasterner with brass screws	Nos.	6.00		
6.15	Supply and fixing of heavy brass150mm long barrel bolt with brass screws	Nos.	4.00		
6.16	Supply and fixing heavy brass draw ring	Nos.	3.00		
6.17	Removing easing and refixing of door with necessary brass screws	Nos.	2.00		
6.18	Supply and fixing of flat asbestos sheet with necessary beading	Nos.	6.00		
6.19	Supplying and fixing cylindrical lock with necessary screws	Nos.	2.00		
6.20	Supply and fixing of commode with ceramic low level cistern all in one set flush pipe double plastic seat cover 12mm stop cock, trap including bide shower to working order	No.	1.00		
6.21	Supply and fixing large squatting pan with necessary traps and glazed foot rest	No.	2.00		
6.22	Supplying and fixing of 25mm dia.Bib tap with necessary fittings and necessary clips	Nos.	4.00		

RENOVATION OF ICE CUBE MAKING UNIT AT KALUWANKERNY

BILLS OF QUANTITIES

6. REPAIRS TO TOILET

ITEM #	DESCRIPTION	UNIT	QTY	RATE	AMOUNT
6.23	Supplying and laying 32mm dia 1000 type P.V.C. pipe with necessary fittings. and necessary clips	L.m	10.00		
6.24	Supplying and laying 25mm dia 1000 type P.V.C. pipe with necessary fittings. and necessary clips	L.m	5.00		
6.25	Supplying and laying 20mm dia 1000 type P.V.C. pipe with necessary fittings. and necessary clips	L.m	5.00		
6.26	Supply and fixing of 150mmx20mm Plastic Shower ross with 20mm stop cock	Nos.	1.00		
6.27	Floor tiles 300x300mm coloured non skid floor ceremic tiles Lanka/Rocell or equivalent with all special corner etc.applied and fixed to floor including raking plastering and bedding in cement motor 1:2 mix in toilet	Sq.m	8.00		
6.28	300 x 200mm Lanka ceramic wall tiling on and including 12mm thick 1:3 cement sand backing and joints pointed with neat coloured cement to match the colour of tiles in toilet.	Sq.m	10.00		
6.29	Allow for applying two coats of white emulsion paint to all walls.	Sq.m	40.00		
6.30	Allow for applying one coat of floor paint to plinth.	Sq.m	10.00		
TOTAL FOR BILL NO.06-REPAIRS TO TOILET CARRIED TO GRAND SUMMARY				**SLRs.**	

RENOVATION OF ICE CUBE MAKING UNIT AT KALUWANKERNY

BILLS OF QUANTITIES

7. CONSTRUCTION OF CHAIN LINK(35m) AND BARBED WIRE FENCING

ITEM #	DESCRIPTION	UNIT	QTY	RATE	AMOUNT
	EXCAVATION/DEMOLISHING				
7.01	Allow for site clearing along the chain link, barbed wire fencing and removing of roots.	Item	1.00		
7.02	Excavation to the errect fence posts.	Cu.m	4.58		
7.03	Supplying and fixing PVC coated chain link 12 G mesh tied to PVC coated wire in 63mm (2") heavy duty G.I pipe in uprights and 31mm(1-1/4") fix to top and bottom welded properly embeded in 375mm x 375mm x 600mm pit and 1:2:4 (20mm) mix cement and sand concrete as per plan rate included one coats of anticrosive and two coats of enamel paint.	L.m	35.00		
7.04	Fence barbed wire 8 strands, 12 1/2 BWG with 4 points at 75mm crs. & RCC posts 1:2:4(20), reinforced with 4 Nos. 6mm rods with No. 14 BWG stirrups at 200mm crs. posts to be fixed at 2.40m crs. and straining bolts all as per type plan struts to be reinforced with 4 Nos. 10mm rods and corner posts with 4 Nos. 12mm rods (excavation and concrete paid seperately).	L.m	32.00		
	CONCRETER				
7.05	1:3:6(40mm) cement sand mix in concrete for fence posts.	Cu.m	2.68		
	DECORATOR AND PAINTER				
7.06	Allow for applying two coats of white wash to fencing post.	Sq.m	20.00		
TOTAL FOR BILL NO.07-CONSTRUCTION OF CHAIN LINK(35m) AND BARBED WIRE FENCING CARRIED TO GRAND SUMMARY				**SLRs.**	

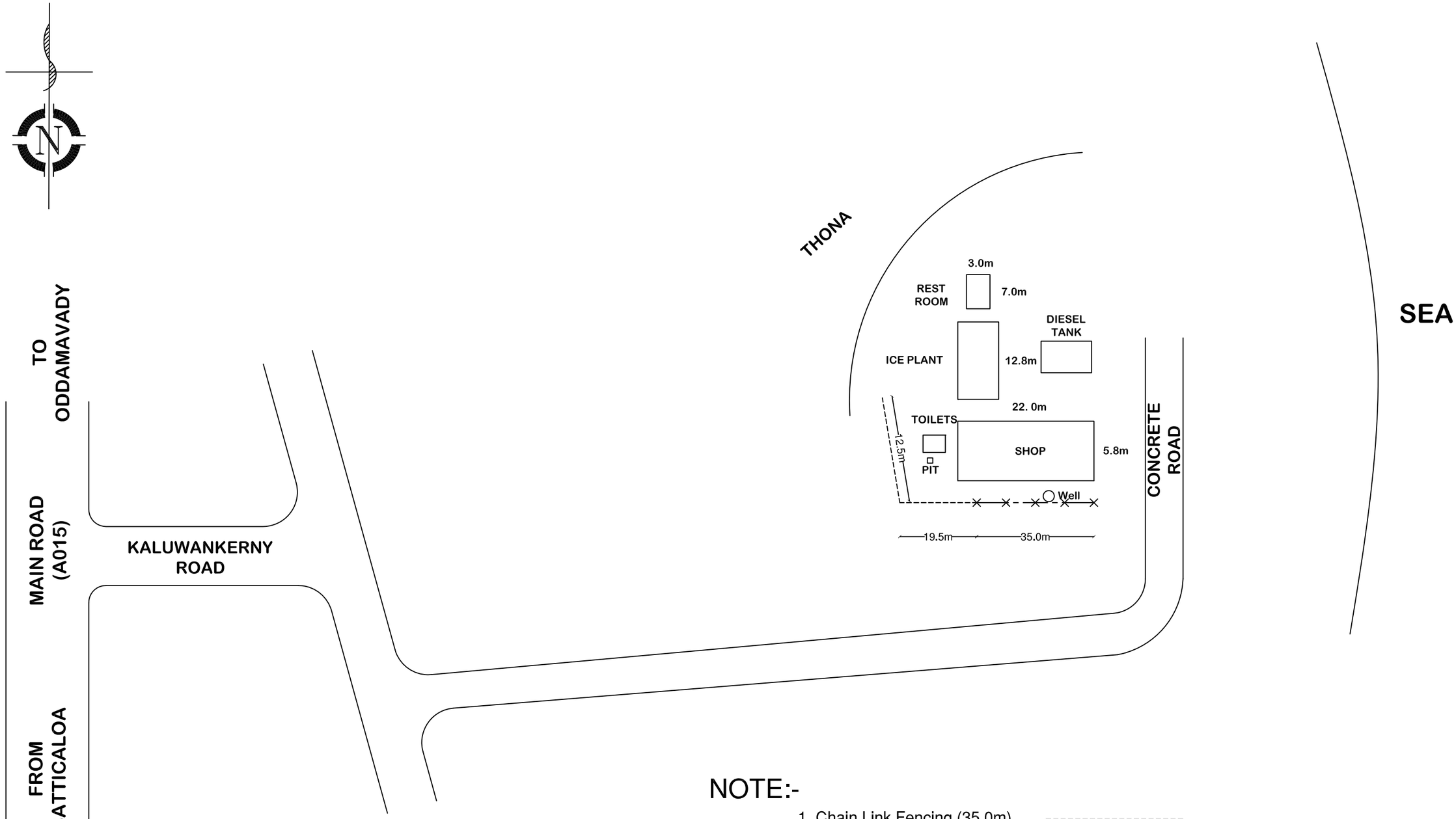

NOTE:-

1. Chain Link Fencing (35.0m) ----------

2. Barbed Wire Fencing (32.0m) —×—×— × —×—×—

UNITED NATIONS DEVELOPMENT PROGRAM Empowered lives. Resilient nations.	RENOVATION OF ICE CUBE MAKING UNIT IN KALUVANKERNY.	RDC RESOURCES DEVELOPMENT CONSULTANTS (PVT) LTD, No: 55-2/1, Galle Road, Colombo - 03	DRAWING TITLE	SITE LAYOUT	
			DRAWN	JM.A	
			CHECKED	A.V	
			DATE	28.10.2015	
			SCALE	NOT TO SCALE	All dimension are mm
			DRAWING NO	UNDP/BT/RICM/LAY/001	REV. NO

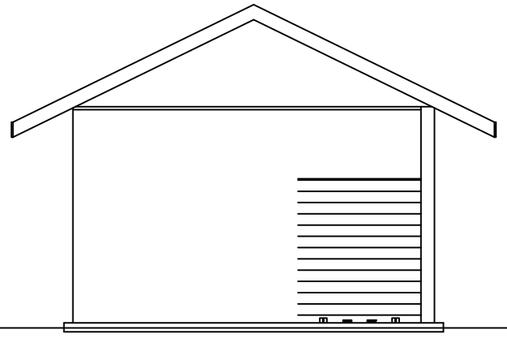

FRONT ELEVATION

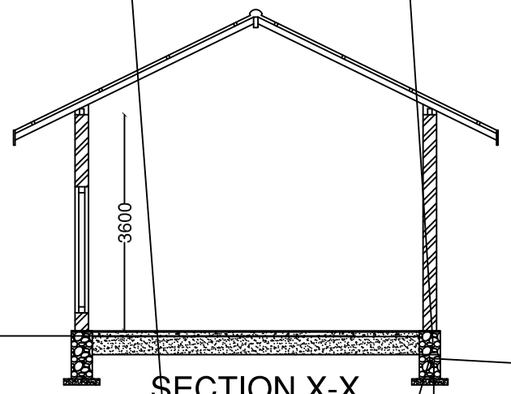

SECTION X-X

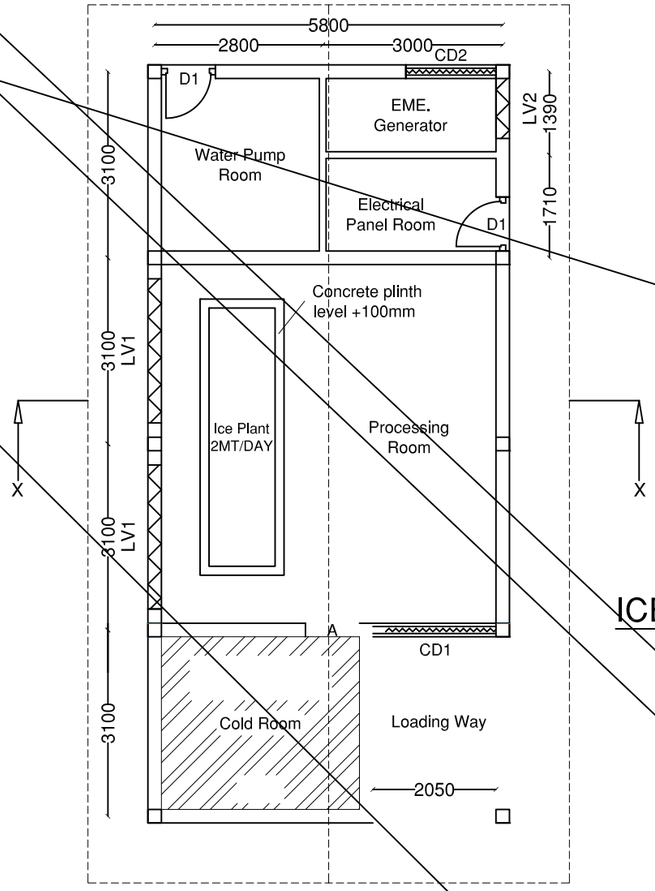

ICE PLANT PLAN

SCALE 1:100

Note :- Ice plant plinth size (LxW) should be confirmed by supplier

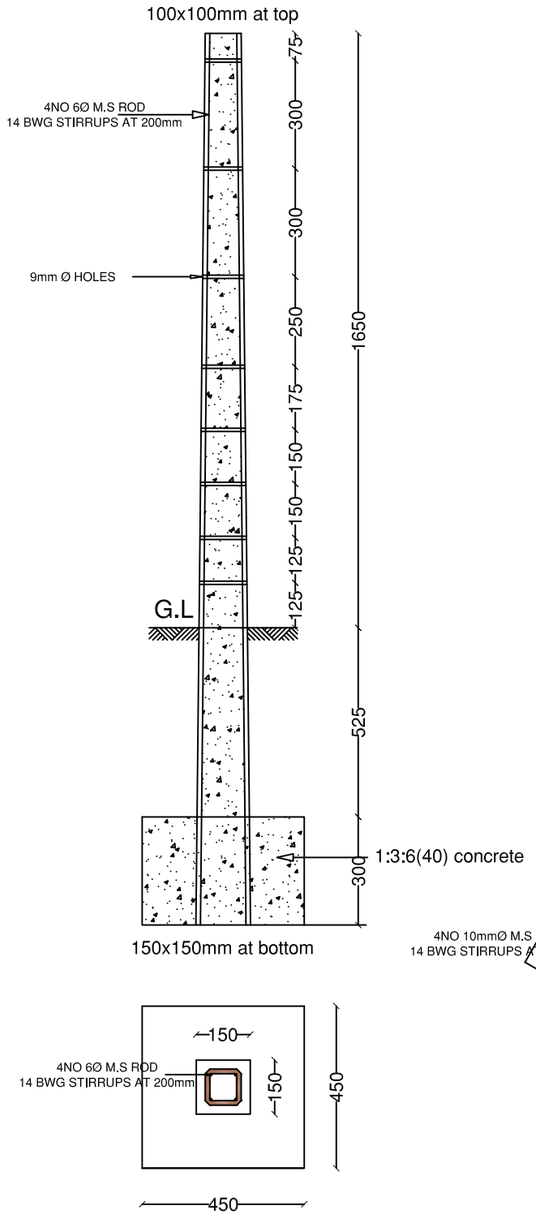

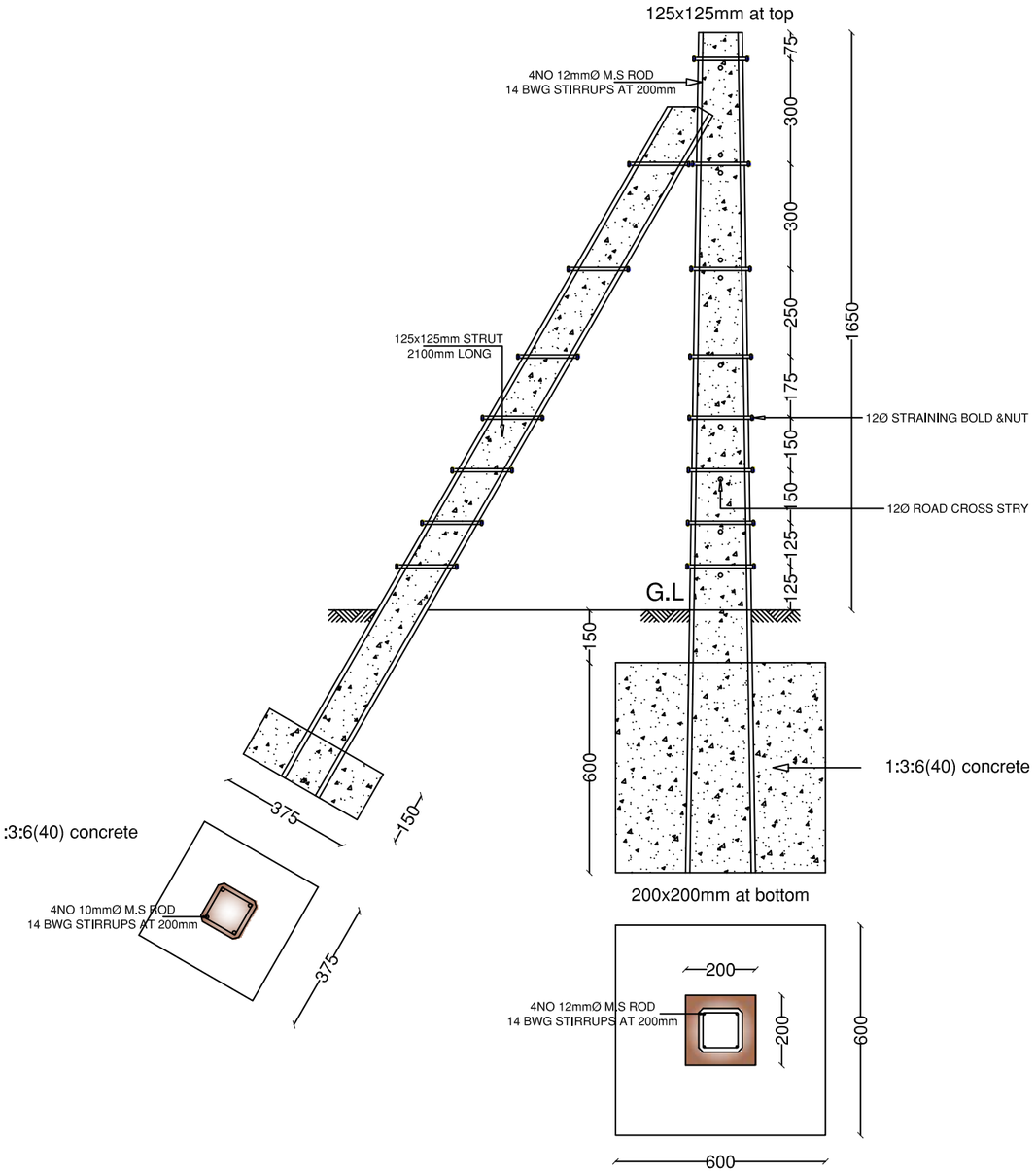

INTERMEDIATE POST

CORNER STRAITENING POST WITH STRUTS

UNITED NATIONS DEVELOPMENT PROGRAM Empowered lives. Resilient nations.	RENOVATION OF ICE CUBE MAKING UNIT IN KALUVANKERNY.	RDC RESOURCES DEVELOPMENT CONSULTANTS (PVT) LTD, No: 55-2/1, Galle Road, Colombo - 03	DRAWING TITLE	BARBED WIRE	
			DRAWN	**JM.A**	
			CHECKED	A.V	
			DATE	26.10.2015	
			SCALE	NOT TO SCALE	All dimension are mm
			DRAWING NO	UNDP/BT/RICM/FEN/001	REV. NO

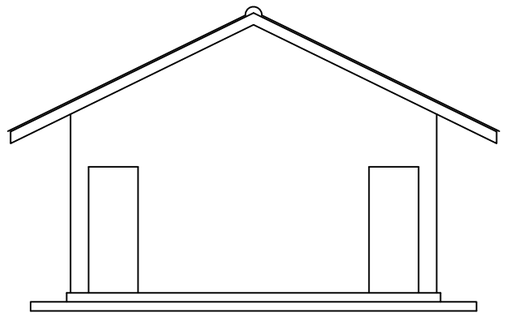

FRONT ELEVATION

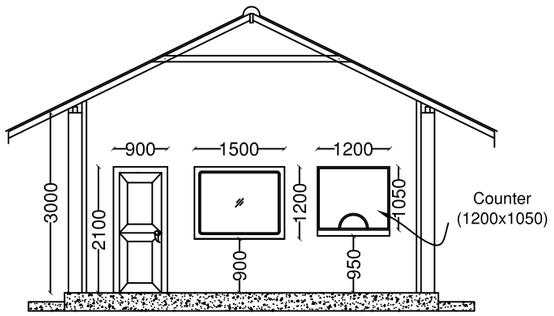

SECTION A- A

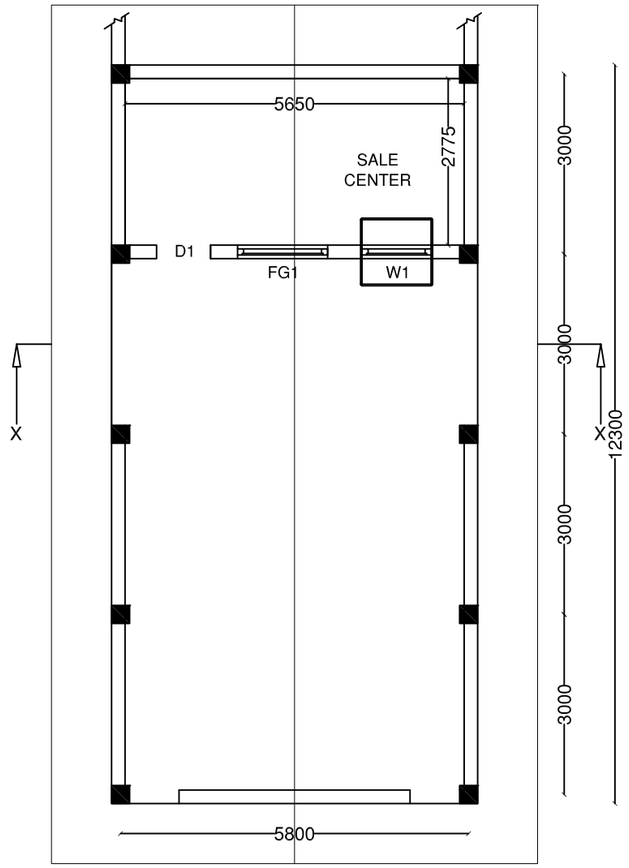

SHOP PLAN

UNITED NATIONS DEVELOPMENT PROGRAM Empowered lives. Resilient nations.	RENOVATION OF ICE CUBE MAKING UNIT IN KALUVANKERNY.	RDC RESOURCES DEVELOPMENT CONSULTANTS (PVT) LTD, No: 55-2/1, Galle Road, Colombo - 03	DRAWING TITLE: PLAN , ELEVATION AND SECTION FOR SHOPS
			DRAWN: JM.A
			CHECKED: A.V
			DATE: 29.10.2015
			SCALE: 1:100 — All dimension are mm
			DRAWING NO: UNDP/BT/RICM/Ar/002 — REV. NO

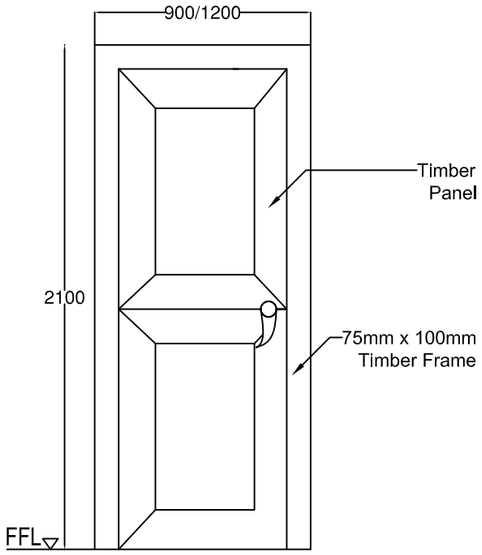

D1-Door

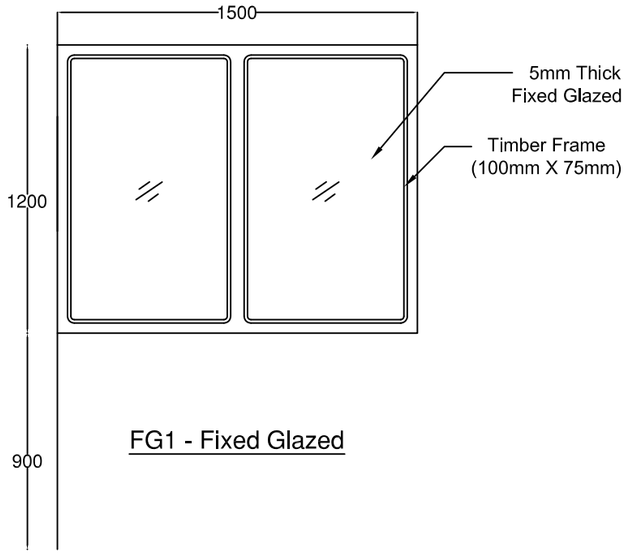

FG1 - Fixed Glazed

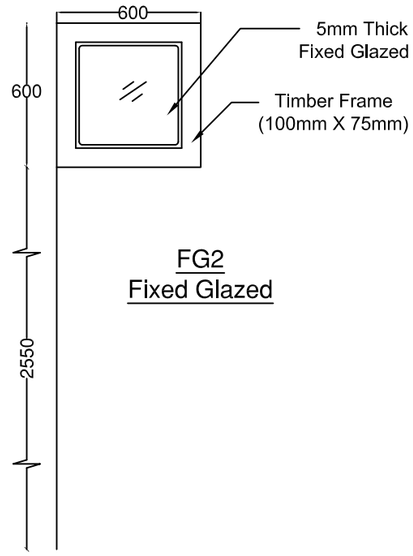

FG2
Fixed Glazed

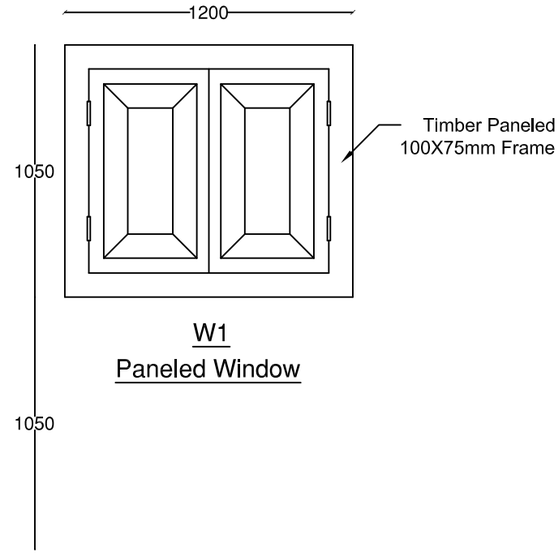

W1
Paneled Window

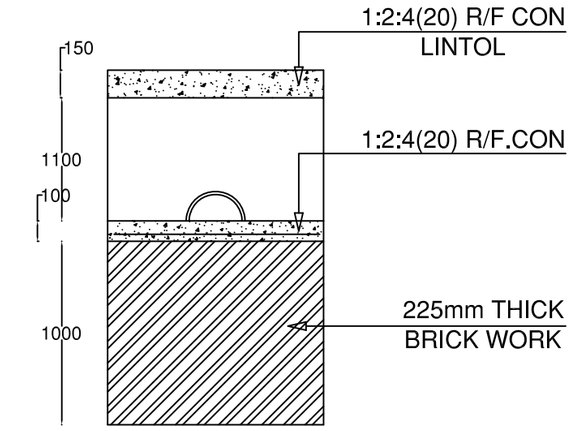

SECTION X-X

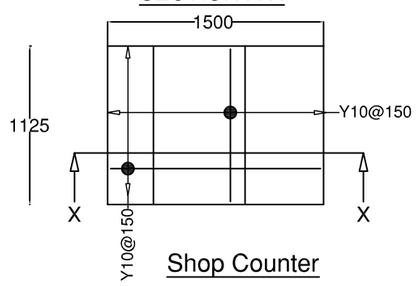

Shop Counter

DETAILS OF OPENINGS

ITEM	SIZE(mm)	DESCRIPTION	NOS
D1	900 x 2100	Paneled Door	01
D2	1200 x 2100	Paneled Door	01
D3	600 x 600	Ledged Braced Door (Motor Room)	01
W1	1200 x 1050	Counter Window (Paneled)	01
W2	600 x 1000	Window (Existing)	01
FG1	1500 x 1200	Fixed Glazed	01
FG2	600 x 600	Fixed Glazed	08

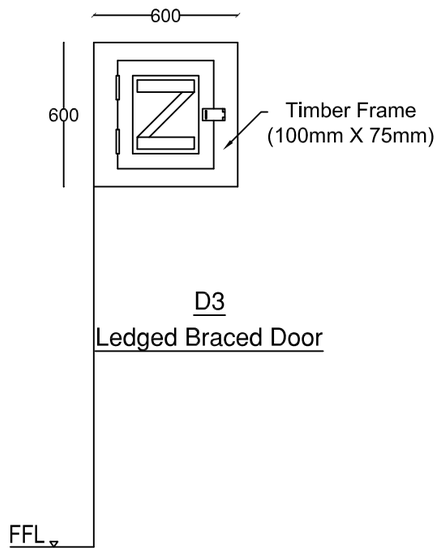

D3
Ledged Braced Door

UNITED NATIONS DEVELOPMENT PROGRAM

Empowered lives. Resilient nations.

RENOVATION OF ICE CUBE MAKING UNIT IN KALUVANKERNY.

RDC

RESOURCES DEVELOPMENT CONSULTANTS (PVT) LTD,
No: 55-2/1, Galle Road,
Colombo - 03

DRAWING TITLE	DOORS, WINDOWS DETAILS AND SHOP COUNTER		
DRAWN	JM.A		
CHECKED	A.V		
DATE	26.10.2015		
SCALE	1:25	All dimension are mm	
DRAWING NO	UNDP/BT/RICM/Do/002	REV. NO	