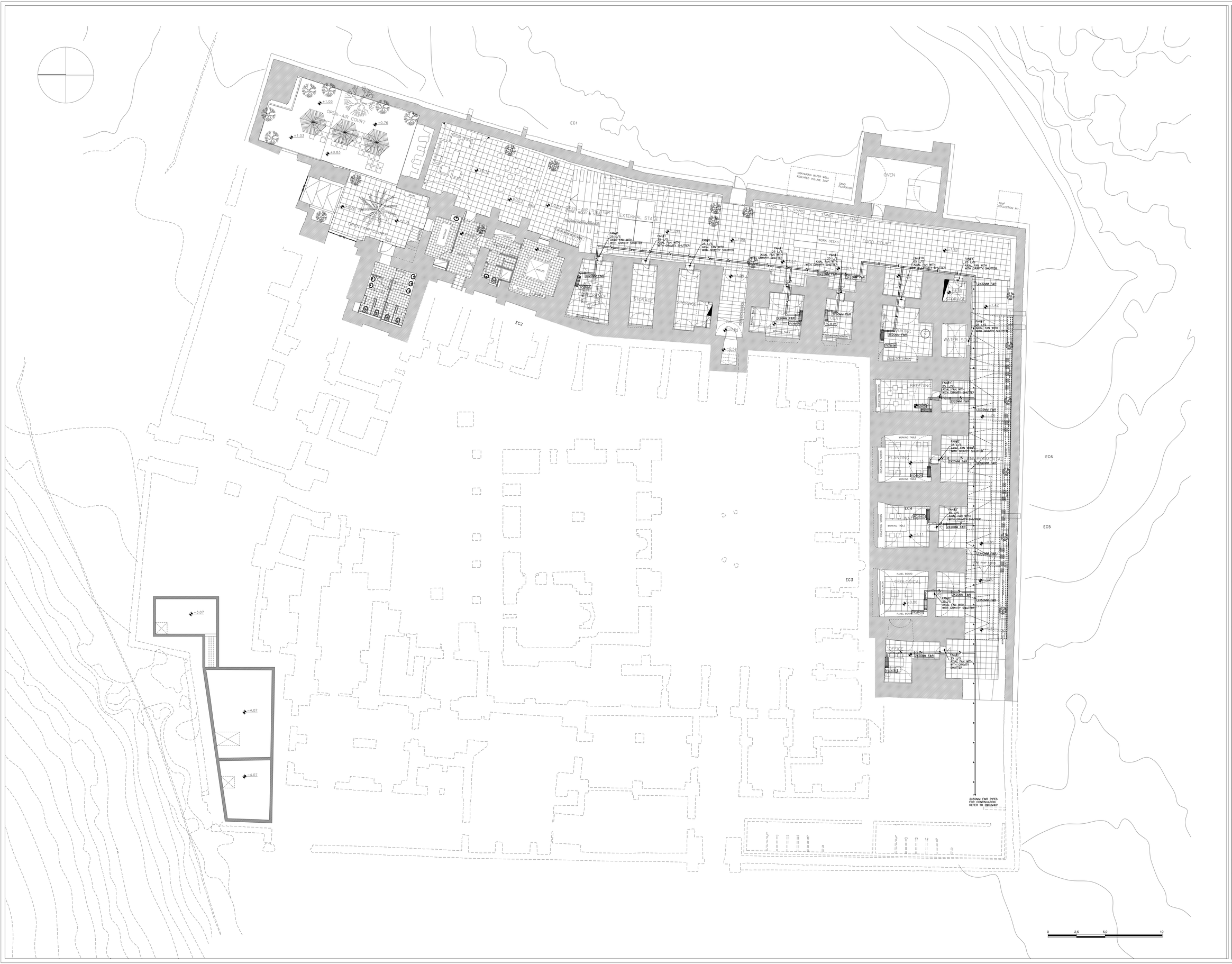

NOTES & LEGEND:

- WALL MOUNTED FANCOIL UNIT
- CEILING SUPPLY GRILL (WITH DAMPER)
- RETURN GRILL
- EXHAUST SQUARE CEILING GRILL
- ROOM THERMOSTAT
- SAD — SUPPLY AIR DUCT
- EAD — EXHAUST AIR DUCT
- CENTRIFUGAL EXHAUST FAN
- IN-LINE EXTRACT FAN
- AXIAL EXTRACT FAN
- FLOW PIPE
- RETURN PIPE
- U/G — UNDERGROUND
- U/T — UNDERTILE
- AFC — ABOVE FALSE CEILING
- F/A — FROM ABOVE
- T/A — TO ABOVE
- F/B — FROM BELOW
- T/B — TO BELOW

EUROPEAN UNION

Empowered lives. Resilient nations.

PROJECT:

Securing Professional Services for the Architectural Restoration and Rehabilitation Designs, Archaeological Documentation and Orientation Training, Including Tender Documents Preparation and Site Supervision for Conservation and Rehabilitation Works of Maqam Al-Nabi Musa in Jericho Governorate

Support to Development of Cultural Tourism

DESIGN WORKS:

-Jerusalem Design Center

ELECTRICAL WORKS:

-Eng .Midhat AlSharif

MECHANICAL WORKS:

-Elite Mechanical Consultants

SHEET NAME:

UNDERGROUND FLOOR AC&VENTILATION PLAN

SCALE: 1:100 (IF PILOTED ON A0)

EDITION: MECHANICAL

- [ ] For Review
- [ ] For Approval
- [x] For Tender
- [ ] For Construction

SHEET NO. M400

DATE: July-2016

JerusalemDesignCenter
Architects, Engineers & Consultants
Phone: 02 234 3696 | Fax: 02 234 3779 | Email: info@jdc.ps

NOTES & LEGEND:

- WALL MOUNTED FANCOIL UNIT
- CEILING SUPPLY GRILL (WITH DAMPER)
- RETURN GRILL
- EXHAUST SQUARE CEILING GRILL
- ROOM THERMOSTAT
- SAD — SUPPLY AIR DUCT
- EAD — EXHAUST AIR DUCT
- CENTRIFUGAL EXHAUST FAN
- IN-LINE EXTRACT FAN
- AXIAL EXTRACT FAN
- FLOW PIPE
- RETURN PIPE
- U/G — UNDERGROUND
- U/T — UNDERTILE
- AFC — ABOVE FALSE CEILING
- F/A — FROM ABOVE
- T/A — TO ABOVE
- F/B — FROM BELOW
- T/B — TO BELOW

EUROPEAN UNION

Empowered lives. Resilient nations.

PROJECT:

Securing Professional Services for the Architectural Restoration and Rehabilitation Designs, Archaeological Documentation and Orientation Training, Including Tender Documents Preparation and Site Supervision for Conservation and Rehabilitation Works of Maqam Al-Nabi Musa in Jericho Governorate

Support to Development of Cultural Tourism

DESIGN WORKS:

-Jerusalem Design Center

ELECTRICAL WORKS:

-Eng .Midhat AlSharif

MECHANICAL WORKS:

-Elite Mechanical Consultants

SHEET NAME:

GROUND FLOOR

AC&VENTILATION PLAN

SCALE: 1:100 (IF PILOTED ON A0)

EDITION: MECHANICAL

- For Review
- For Approval
- ☑ For Tender
- For Construction

SHEET NO. M401

DATE: July-2016

JerusalemDesignCenter
Architects, Engineers & Consultants
Phone: 02 234 3696 | Fax: 02 234 3719 | Email: info@jdc.ps

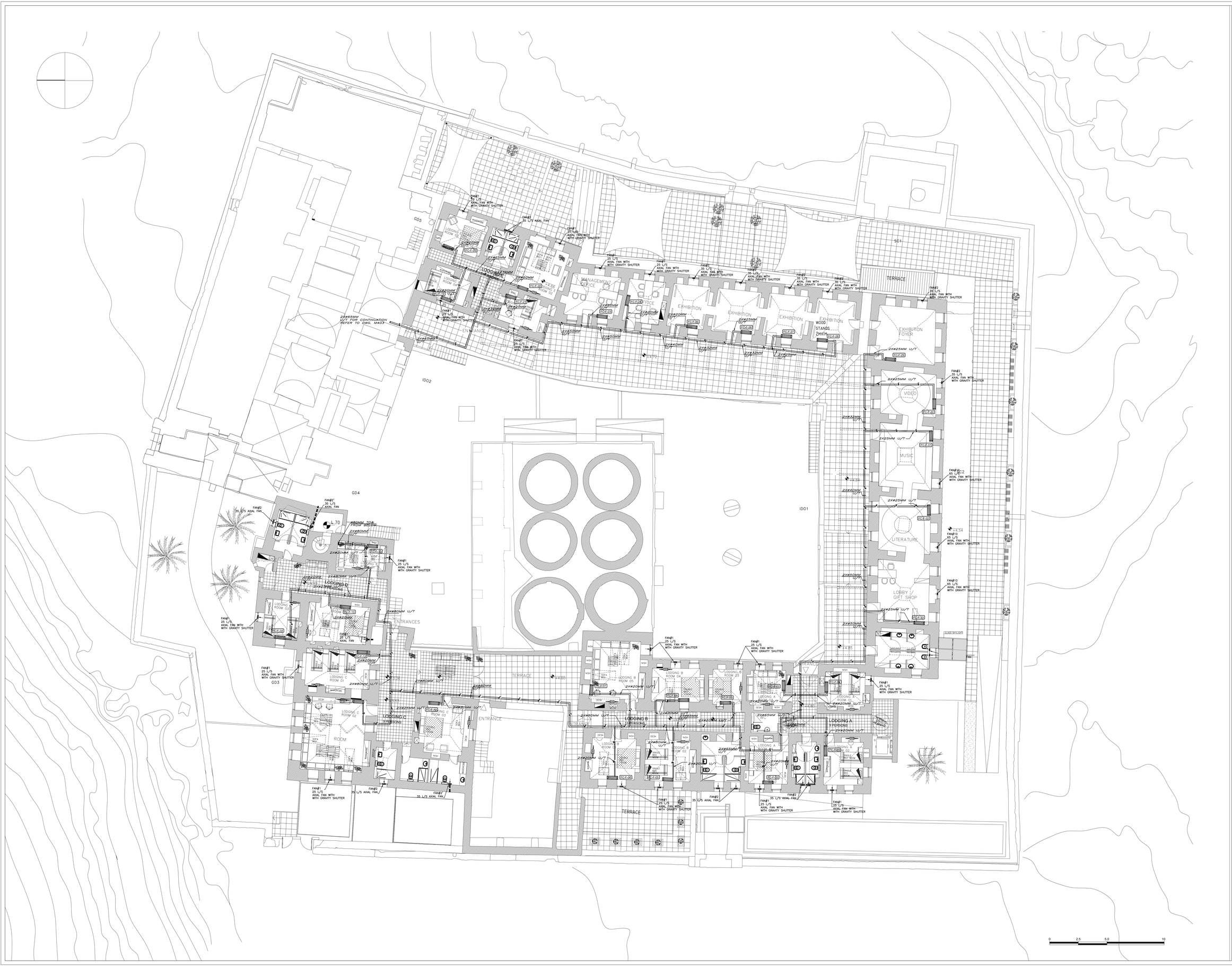

NOTES & LEGEND:

- WALL MOUNTED FANCOIL UNIT
- CEILING SUPPLY GRILL (WITH DAMPER)
- RETURN GRILL
- EXHAUST SQUARE CEILING GRILL
- ROOM THERMOSTAT
- SAD — SUPPLY AIR DUCT
- EAD — EXHAUST AIR DUCT
- CENTRIFUGAL EXHAUST FAN
- IN-LINE EXTRACT FAN
- AXIAL EXTRACT FAN
- FLOW PIPE
- RETURN PIPE

U/G	UNDERGROUND
U/T	UNDERTILE
AFC	ABOVE FALSE CEILING
F/A	FROM ABOVE
T/A	TO ABOVE
F/B	FROM BELOW
T/B	TO BELOW

EUROPEAN UNION

UNDP 50 YEARS — Empowered lives. Resilient nations.

دولة فلسطين
وزارة السياحة والآثار

PROJECT:

Securing Professional Services for the Architectural Restoration and Rehabilitation Designs, Archaeological Documentation and Orientation Training, Including Tender Documents Preparation and Site Supervision for Conservation and Rehabilitation Works of Maqam Al-Nabi Musa in Jericho Governorate

Support to Development of Cultural Tourism

DESIGN WORKS:

-Jerusalem Design Center

ELECTRICAL WORKS:

-Eng .Midhat AlSharif

MECHANICAL WORKS:

-Elite Mechanical Consultants

SHEET NAME:

FIRST FLOOR

AC&VENTILATION PLAN

SCALE: 1:100 (IF PILOTED ON A0)

EDITION: MECHANICAL

- [ ] For Review
- [ ] For Approval
- [x] For Tender
- [ ] For Construction

SHEET NO. M402

DATE: July-2016

JerusalemDesignCenter
Architects, Engineers & Consultants
Phone: 02 234 3696 | Fax: 02 234 3719 | Email: info@jdc.ps

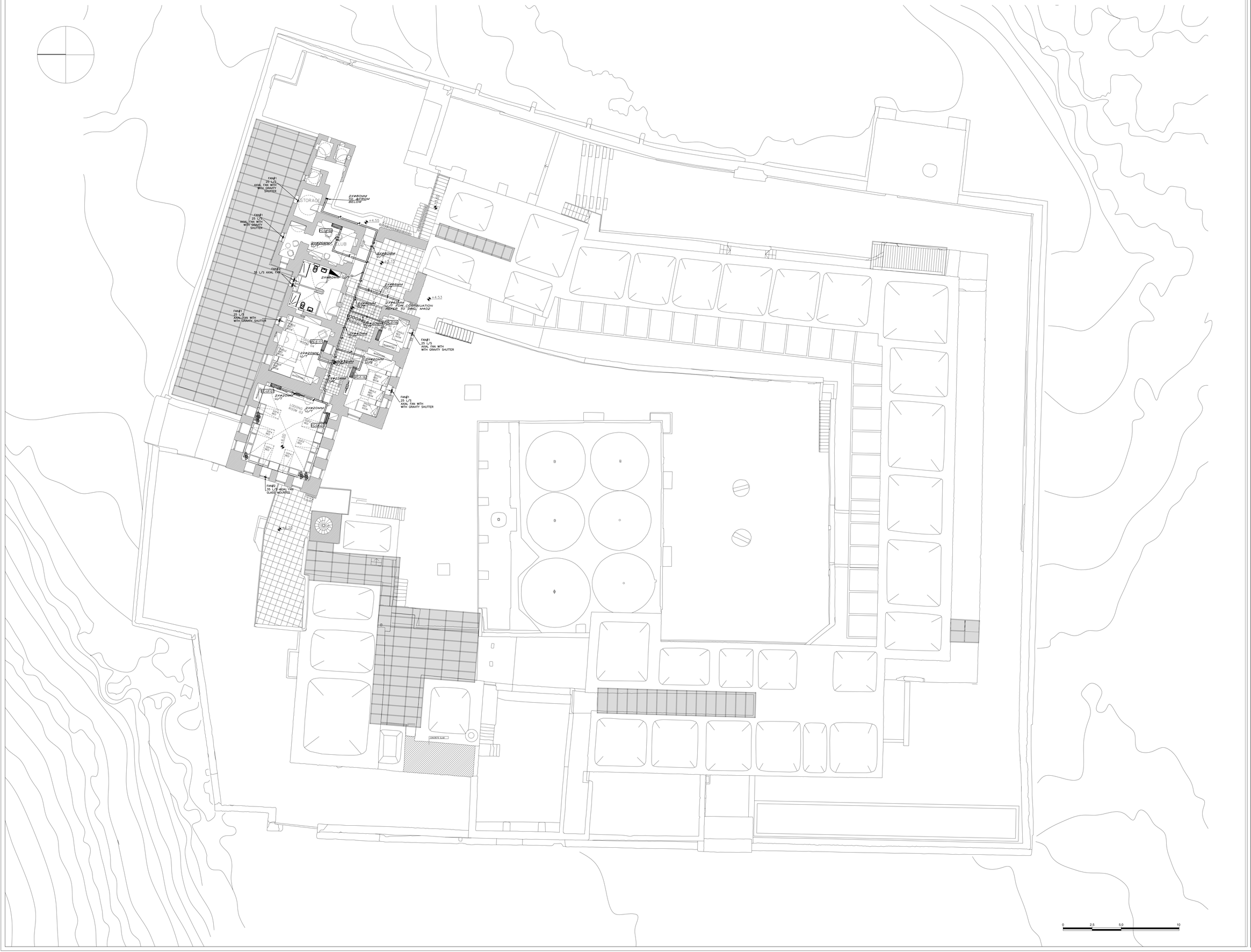

NOTES & LEGEND:

- WALL MOUNTED FANCOIL UNIT
- CEILING SUPPLY GRILL (WITH DAMPER)
- RETURN GRILL
- EXHAUST SQUARE CEILING GRILL
- ROOM THERMOSTAT
- SAD — SUPPLY AIR DUCT
- EAD — EXHAUST AIR DUCT
- CENTRIFUGAL EXHAUST FAN
- IN-LINE EXTRACT FAN
- AXIAL EXTRACT FAN
- FLOW PIPE
- RETURN PIPE

U/G	UNDERGROUND
U/T	UNDERTILE
AFC	ABOVE FALSE CEILING
F/A	FROM ABOVE
T/A	TO ABOVE
F/B	FROM BELOW
T/B	TO BELOW

EUROPEAN UNION

UNDP 50 YEARS — Empowered lives. Resilient nations.

PROJECT:

Securing Professional Services for the Architectural Restoration and Rehabilitation Designs, Archaeological Documentation and Orientation Training, Including Tender Documents Preparation and Site Supervision for Conservation and Rehabilitation Works of Maqam Al-Nabi Musa in Jericho Governorate

Support to Development of Cultural Tourism

DESIGN WORKS:

-Jerusalem Design Center

ELECTRICAL WORKS:

-Eng .Midhat AlSharif

MECHANICAL WORKS:

-Elite Mechanical Consultants

SHEET NAME:

UPPER FIRST FLOOR AC&VENTILATION PLAN

SCALE: 1:100 (IF PILOTED ON A0)

EDITION: MECHANICAL

- [ ] For Review
- [ ] For Approval
- [x] For Tender
- [ ] For Construction

SHEET NO.: M403

DATE: July-2016

JerusalemDesignCenter
Architects, Engineers & Consultants
Phone: 02 234 3696 | Fax: 02 234 3719 | Email: info@jdc.ps

NOTES & LEGEND:

— · — ·	POLYETHYLENE IRRIGATION PIPE
I	IRRIGATION COLLECTOR
⋈	SHUT OFF VALVE
U/G	UNDERGROUND
U/T	UNDERTILE
F/A	FROM ABOVE
T/A	TO ABOVE
F/B	FROM BELOW
T/B	TO BELOW

EUROPEAN UNION

UNDP 50 YEARS — Empowered lives. Resilient nations.

وزارة السياحة والآثار

PROJECT:

Securing Professional Services for the Architectural Restoration and Rehabilitation Designs, Archaeological Documentation and Orientation Training, Including Tender Documents Preparation and Site Supervision for Conservation and Rehabilitation Works of Maqam Al-Nabi Musa in Jericho Governorate

Support to Development of Cultural Tourism

DESIGN WORKS:

-Jerusalem Design Center

ELECTRICAL WORKS:

-Eng .Midhat AlSharif

MECHANICAL WORKS:

-Elite Mechanical Consultants

SHEET NAME:

GROUND FLOOR IRRIGATION PLAN

SCALE: 1:100 (IF PLOTED ON A0)

EDITION: MECHANICAL

- [ ] For Review
- [ ] For Approvail
- [x] For Tender
- [ ] For Construction

SHEET NO. M500

DATE: July-2016

JerusalemDesignCenter
Architects, Engineers & Consultants
Phone: 02 234 3696 | Fax: 02 234 3779 | Email: info@jdc.ps

FOUNTAIN PUMP SCHEDULE

PUMP LABEL	SERVED AREA	LOCATION	FLOW (M3/HR)	HEAD (M)	MOTOR DATA				QUANTITY			TYPE	SYSTEM
					RPM	KW	ø	VOLTS	ON DUTY	STAND BY	TOTAL		
SMP-02	GROUND FLOOR FOUNTAIN	FOUNTAIN	7.2	7	2900	0.3	1	220	1	0	1	SUBMERSIBLE PUMP	FOUNTAIN USE

COLD & HOT WATER PUMPS SCHEDULE

PUMP LABEL	LOCATION	FLOW (L/S)	HEAD (M)	MOTOR DATA				QUANTITY			TYPE	FUNCTION	SERVED AREA
				RPM	KW	ø	VOLTS	ON DUTY	STAND BY	TOTAL			
LP-1	UNDERGROUND	4.0	15	2900	1.0	3	380	1	1	2	BASE-MOUNTED END-SUCTION STAINLESS STEEL BODY&IMPELLER	LIFTING PUMP	FLUSH WATER SYSTEM
BCWP-1	SITE PUMP ROOM	3.0	35	2900	2.0	3	380	1	1	2	BOOSTER PUMP MULTISTAGE/VARIABLE SPEED STAINLESS STEEL BODY&IMPELLER	BOOSTER PUMP	DOMESTIC COLD WATER
FWP-1	SITE PUMP ROOM	6.3	40	2900	4.5	3	380	1	1	2	BOOSTER PUMP MULTISTAGE/VARIABLE SPEED STAINLESS STEEL BODY&IMPELLER	BOOSTER PUMP	FLUSH WATER SYSTEM
CP-1	MECHANICAL ROOM	0.2	7	2900	0.2	1	220	1	0	1	INLINE CENTRIFUGAL STAINLESS STEEL BODY&IMPELLER	CIRCULATING PUMP RETURN HOT	HOT WATER RETURN SYSTEM
IRP-1	MECHANICAL ROOM	0.5	30	2900	0.5	3	380	1	0	1	BOOSTER PUMP MULTISTAGE/VARIABLE SPEED STAINLESS STEEL BODY&IMPELLER	IRRIGATION PUMP	IRRIGATION SYSTEM

FIRE FIGHTING PUMPS SCHEDULE

PUMP DESCRIPTION	LOCATION	FLOW (gpm)	HEAD (M)	MOTOR DATA				QUANTITY			TYPE
				RPM	KW	ø	VOLTS	ON DUTY	STAND BY	TOTAL	
FP-1	SITE PUMP ROOM	100	60	2900	7.0	3	380	1	1	2	ELECTRIC PUMP (FIRE FIGHTING SYSTEM)

R-120 RESTURANT FIRE SUPPRESSION SYSTEM	
REFERENCES	UL-STANDARD 1245 UL-STANDARD 300 NFPA 96 NFPA 17A
SYSTEM DESCRIPTION	THE SYSTEM SHALL BE AN AUTOMATIC FIRE SUPPRESSION SYSTEM USING A WET CHEMICAL AGENT FOR COOKING GREASE RELATED FIRES. THE SYSTEM SHALL BE THE PRE-ENGINEERED TYPE HAVING MAXIMUM AND MINIMUM GUIDELINES ESTABLISHED BY THE MANUFACTURER AND LISTED BY UNDERWRITERS LABORATORIES (UL/ULC)
COMPONENTS	-WET CHEMICAL AGENT: THE EXTINGUISHING AGENT SHALL BE A SPECIALLY FORMULATED AQUEOUS SOLUTION OF ORGANIC SALTS WITH A PH RANGE BETWEEN 7.7-8.7,DESIGNED FOR FLAME KNOCKDOWN AND FOAM SECURMENT OF GREASE RELATED FIRES. -AGENT TANK:THE TANK SHALL BE INSTALLED IN A STAINLESS STEEL ENCLOSUREWITH SIZE OF 2X3.0 GALLON. -REGULATED RELEASE MECHANISM: SHALL BE A SPRING LOADED, MECHANICAL/PENUMATIC TYPE CAPABLE OF PROVIDING THE EXPELLANT GAS SUPPLY TO ONE OR TWO AGENT TANKS. -DISCHARGE NOZZELS:EACH NOZZLE SHALL BE TESTED AND LISTED WITH THE R-102 SYSTEM FOR A SPECIFIC APPLICATION.FLOW NUMBER DESIGNATION 2,NUMBER OF NOZZLES 10. -DISTRIBUTION PIPING: SCHEDULE 40 BLACK IRON,CONFIRMING TO ASTM A120. -DETECTORS:SHALL BE THE FUSIBLE LINK STYLE DESIGNED TO SEPARATE AT A SPECIFIC TEMPERATURE. -CARTRIDGES: SHALL BE A SEALED STEEL PRESSURE VESSEL CONTAINING EITHER CARBON DIOXIDE OR NITROGEN GAS. -AGENT DISTRIBUTION HOSE -FLEXIBLE CONDUIT -PULL STATION ASSEMBLY: THE FIRE SUPPRESSION SYSTEM SHALL INCLUDE A REMOTE PULL STATION FOR A MANUAL ACTUATION.

CLASS K FIRE FIGHTING EXTINGUISHER	
CAPACITY(KG)	6.0
UL FIRE RATING	K
AGENT TYPE	POTASSIUM ACETATE
CYLINDRICAL MATERIAL	STAINLESS STEEL
VALVE MATERIAL	PLATED BRASS
HANDLE MATERIAL	STAINLESS STEEL
EXPELLANT	NITROGEN/AIR
OPERATING PRESSURE@70°F	100
TEMPREATURE RANGE(°C)	4.4 TO 48.9
AGENT FLOW RATE(KG/SEC.)	N/A
NOM.DISCHARGE TIME(SEC)	50 TO 55
MAXIMUM TRAVEL DISTANCE TO EXT.(M)	9.0
DISCHARGE RANGE(M)	2.4 TO 3.7
UNIT HEIGHT(CM)	49.5
UNIT WIDTH(CM)	22.2
UNIT DEPHT(CM)	17.8
USCG APPROVAL	N/A
LISTING	UL LISTED - MEETS D.O.T. REQUIRMENTS

FM-200 SYSTEM DESIGN DATA	
SERVED AREA	LOW CURRENT&SERVICES ROOM
DESIGN STANDARD	NFPA -2001
EXTINGUISHANT AGENT	FM-200 (HFC-227ea)
DESIGN CONCENTRATION	7 %
DESIGN TEMP.	20°c
MAXIMUM DISCHARGE TIME	10 Sec.
HAZARD PROTECTED	PABX DATA ROOM
FLOOD FACTOR	0.5483 KG/M3
ENCLOSURE'S	LOW VOLTAGE ROOM
AREA	10.5 M2
HEIGHT	3 M
VOLUME	31.5 M3
TOTAL REQUIRED AGENT	20 Kg

ABC FIRE FIGHTING EXTINGUISHER	
CAPACITY(KG)	5.0
UL FIRE RATING	4-A:80-B:C
AGENT TYPE	ABC
CYLINDRICAL MATERIAL	STEEL
VALVE MATERIAL	ALUMINUIM
HANDLE MATERIAL	PLATED STEEL
EXPELLANT	NITROGEN
OPERATING PRESSURE@70°F	195
TEMPREATURE RANGE(°C)	-40 TO 48.9
AGENT FLOW RATE(KG/SEC.)	0.23
NOM.DISCHARGE TIME(SEC)	22
MAXIMUM FLOOR AREA FOR EXTIN.(M^2)	1045
MAXIMUM TRAVEL DISTANCE TO EXT.(M)	22
DISCHARGE RANGE(M)	4.9 TO 6.1
UNIT HEIGHT(CM)	48.1
UNIT WIDTH(CM)	19.7
UNIT DEPHT(CM)	13.3
USCG APPROVAL	TYPEA SIZE# TYPE B:C SIZE#
LISTING	UL LISTED AND USCG APPROVED-MEETS D.O.T. REQUIRMENTS

PUMP SCHEDULE(SMP-01)	
TYPE	SUBMERSIBLE GRINDER PUMP VERTICAL SINGLE-STAGE CAST IRON SUBMERSIBLE PUMP WITH INTEGRATED SUBMERSIBLE 3-PHASE MOTOR
DESCRIPTION	THE PUMP IS EQUIPPED WITH A HARDENED STEEL CUTTER SYSTEM SUITABLE FOR PUMPING WASTEWATER AND SEWAGE IN PRESSURIZED SYSTEMS. THE PUMP HAS A DOUBLE SHAFT SEAL AND AN INTERMEDIATE OIL CHAMBER PRE-FIILED WITH SPECIAL OIL THE MOTOR IS INSULATION CLASS F AND HAS LONG-LIFE DEEP-GROOVE GREASED-FOR-LIFE BALL BEARINGS THE PUMP INSTALLATION ON AN AUTO-COUPLING SYSTEM
ACTUAL CALCULATED FLOW(M3/HR)	6 M3/HR
RESULTING HEAD OF THE PUMP(M)	7
TYPE OF IMPELLER	CUTTER SYSTEM
PUMP HOUSING	CAST IRON
IMPELLER	CAST IRON
ELECTRICAL DATA :	
POWER INPUT (KW)	0.2
MAIN FREQUENCY (Hz)	50
RATED VOLTAGE	230V
Quantity	2(1 ONDUTY -1 STANDBY)

SOFTNER

TYPE	DUAL AUTOMATIC,FULLY AUTOMATIC,ONE COLUMN IN OPERATION WHILE THE SECOND IS IN REGENERATION OR STAND BY,SOFTENERS CHANGE AND REGENERATION INITIATION ARE AUTOMATIC BY WATER FLOW MEASUREMENT. ALL THE SYSTEM IS BUILT OF PLASTIC,CORROSION RESISTANT MATERIALS.
GRAIN CAPACITY	30,000
MAXIMUM FLOW RATE (M3/HR)	1.2
BRINE TANK	24"X40" HDPE CONSTRUCTION FULLY ASSEMBLLED WITH SAFTEY BRINE VALVE
VALVE DIAMETER	1"
CONTROL	METER CONTROL
VESSEL	9"X35"
CONSTRUCTION	2 POLYETHYLENE LINED FRP COLUMNS-RESISTANT TO PRESSURE AND CHEMICALS
ION EXCHANGE RESIN	CONSTRUCTION ABS PLASTIC.DOUBLE PISTON VALVE ,OPERATED WITH COMPRESSED AIR BY THE WATER LINE PRESSURE
OPERATING PRESSURE	1.5-6 BAR (RESISTANT TO 10 BAR)
PIPING	PVC SOCKET WELDED
CONTROL	-PROGRAMMABLE MICROPROCESSOR TYPE. -REGENERATION BY VOLUME WITH DIGITAL DISPLAY OF AVAILABLE WATER QUANTITY AND REGENERATION STEPS. -OPTIONAL REGENERATION B PUSH -BUTTON OR EXTERNAL SIGNAL. -OPERATED BY 12 VOLT SUPPLY (A SUITABLE TRANSFORMER IS INCLUDED .INTERNAL RECHARGEABLE BATTERY FOR MEMORY BACK UP. -HIGH RELIABILITY CONTROLLER VALVE SYSTEM.

NOTES & LEGEND:

EUROPEAN UNION — Empowered lives. Resilient nations. — UNDP 50 YEARS — وزارة السياحة والآثار

PROJECT:

Securing Professional Services for the Architectural Restoration and Rehabilitation Designs, Archaeological Documentation and Orientation Training, Including Tender Documents Preparation and Site Supervision for Conservation and Rehabilitation Works of Maqam Al-Nabi Musa in Jericho Governorate

Support to Development of Cultural Tourism

DESIGN WORKS:
-Jerusalem Design Center

ELECTRICAL WORKS:
-Eng .Midhat AlSharif

MECHANICAL WORKS:
-Elite Mechanical Consultants

SHEET NAME:
SCHEDULE OF EQUIPMENTS-1

SCALE: N.T.S
EDITION: MECHANICAL

- [ ] For Review
- [ ] For Approval
- [x] For Tender
- [ ] For Construction

SHEET NO. M600

DATE: July-2016

JerusalemDesignCenter
Architects, Engineers & Consultants
Phone: 02 234 3696 | Fax: 02 234 3719 | Email: info@jdc.ps

UNDERGROUND FLOOR

FANCOIL UNITS SCHEDULE

FAN COIL NO.	TYPE	AIR FLOW (L/S)	COOLING CAPACITY TOTAL (KW)	COOLING CAPACITY SENSIBLE (KW)	COOLING CAPACITY WATER (L/S)	HEATING CAPACITY TOTAL (KW)	HEATING CAPACITY WATER (L/S)	ELEC. (W)	QTY
FC-B-01	FLOOR MOUNTED	204	2.4	2.1	0.12	1.1	0.05	93	1
FC-B-02	FLOOR MOUNTED	315	4.1	3.2	0.20	1.7	0.08	251	1
FC-B-03	FLOOR MOUNTED	315	4.1	3.3	0.20	1.8	0.09	251	1
FC-B-04	FLOOR MOUNTED	315	4.6	3.6	0.22	1.9	0.09	251	1
FC-B-05	FLOOR MOUNTED	315	3.7	2.9	0.18	1.6	0.08	251	1
FC-B-06	FLOOR MOUNTED	358	5.9	4.5	0.28	2.5	0.12	305	1
FC-B-07	FLOOR MOUNTED	204	2.9	2.4	0.14	1.0	0.05	93	1
FC-B-08	FLOOR MOUNTED	315	3.7	3.0	0.18	1.3	0.06	251	1
FC-B-09	FLOOR MOUNTED	315	4.7	3.9	0.23	1.6	0.08	251	1
TOTAL(KW)			36.1			14.5			

-FANCOIL TO BE SELECTED ON MEDIUM SPEED
-ENTERING/LEAVING WATER TEMP.FOR COOLING (7°C/12°C)
-ENTERING/LEAVING WATER TEMP.FOR HEATING (45°C/40°C)
-INDOOR TEMP.FOR COOLING (23°C)
-INDOOR TEMP.FOR HEATING (23°C)

FANS SCHEDULE

FAN LABLE	TYPE	LOCATION	APPLICATION	FLOW (L/S)	HEAD (PA)	MOTOR DATA RPM	KW	VOLTS	ø	HZ	QNT.
FAN#1	GLASS MOUNTED AXIAL FAN	STORAGES,OFFICES SHOPS&ROOMS	VENTILATION	25	–	2500	0.10	220	1	50	48
FAN#1'	WALL MOUNTED AXIAL FAN	STORAGES,OFFICES SHOPS&ROOMS	VENTILATION	25	–	2500	0.10	220	1	50	13
FAN#2	GLASS MOUNTED AXIAL FAN	STORAGES,MUSEUM TOILETS&ROOMS	VENTILATION &DIRTY EXTRACT	35	–	2500	0.10	220	1	50	20
FAN#2'	WALL MOUNTED AXIAL FAN	STORAGES,MUSEUM TOILETS&ROOMS	VENTILATION &DIRTY EXTRACT	35	–	2500	0.10	220	1	50	8
FAN#3	INLINE CENTRIFUGAL DUCTED FAN	PUBLIC TOILETS GROUND LEVEL	DIRTY EXTRACT	385	100	2300	0.30	220	1	50	1
FAN#4	INLINE CENTRIFUGAL DUCTED FAN	PUBLIC TOILETS RESTURANT	DIRTY EXTRACT	140	75	2750	0.15	220	1	50	1
FAN#5	CENTRIFUGAL EXTRACT FAN	KITCHEN GROUND FLOOR	KITCHEN HOOD	495	100	1400	0.50	220	1	50	1
FAN#6	INLINE CENTRIFUGAL DUCTED FAN	KITCHEN CEILING GROUND FLOOR	DIRTY EXTRACT	200	100	2750	0.20	220	1	50	1
FAN#7	GLASS MOUNTED AXIAL FAN	RESTURANT GROUND FLOOR	VENTILATION	260	–	2700	0.10	220	1	50	2
FAN#8	WALL MOUNTED AXIAL FAN	RECEPTION GROUND FLOOR	VENTILATION	45	–	2500	0.10	220	1	50	1
FAN#9	GLASS MOUNTED AXIAL FAN	MOSQUE&MUSEUM GROUND FLOOR	VENTILATION	200	–	2500	0.10	220	1	50	4
FAN#10	GLASS MOUNTED AXIAL FAN	COOKING/BASEMENT MUSEUM/FIRST	VENTILATION	65	–	2200	0.10	220	1	50	4

MULTIPIPE CHILLER(MPCH-1)

DESCRIPTION	AIR COOLED FOUR PIPE WITH HYDRONIC MODULE INCLUDING TWO PUMPS FOR HEATING COIL AND TWO FOR HEATING (1ON,1STAND-BY)
NET COOLING CAPACITY EVAP.12°C/7°C-AIR(DB)35°C	345 KW
TOTAL POWER POWER INPUT IN COOLING	149 KW
EER	3.13
NET HEATING CAPACITY EVAP.40°C/45°C-AIR(DB)2°C	330 KW
TOTAL POWER POWER INPUT IN HEATING	125.1 KW
MAIN POWER SUPPLY	400/3/50
HEATING COEFFICIENT OF PERFORMANCE	3.52
SYSTEM DATA	
NO. OF REFRIGERANT CIRCUITS	2
COMPRESSOR	
NO. OF COMPRESSORS PER CIRCUIT	4
TYPE	SCROLL
EVAPORATOR	
QUANTITY	1
TYPE	BPHE
CONDENSOR	
TYPE	FIN AND TUBE
FAN	
QUANTITY	6
POWER PER FAN (KW)	1.5
DRIVE TYPE	DIRECT
PHR	
HEAT-EXCHANGER TYPE	BRAZED PLATES
HYDRAULIC DATA	
HIGH PRESSURE HEAD PUMPS NO. (450 KPA)	2 PUMPS-COOLING MODE 2PUMPS-HEATING MODE (1ON, 1 STAND-BY)
POWER PER PUMP (KW)	18.5
COLD WATER FLOW(L/S)	16.6
HOT WATER FLOW(L/S)	15.8
TOTAL WEIGHT(KG)	4552
APPROXIMATE DIMENSIONS(MM)	4460X2250X2312 (LXWXH)
Qt.	1

NOTES:

1. EVAPORATOR WATER (IN/OUT) = 12/7°C ; CONDENSER AIR (IN) = 43°C
2. CONDENSER WATER (IN/OUT) = 40/45°C; EVAPORATOR AIR (IN) = 10°C
3. EVAPORATOR WATER (IN/OUT) = 12/7°C ; CONDENSER WATER (IN/OUT) = 40/45°C
4. SOUND POWER LEVEL DETERMINED IN ACCORDANCE WITH ISO 3744 REGULATIONS AND THE EUROVENT CERTIFICATION.
5.NOTE FOR ELECTRICAL LOAD, MUST SUM COMPRESSORS POWER+FANS POWER+PUMPS POWER.

CHILLER SCHEDULE

REFERENCE No.	CH-1
DESCRIPTION	AIR COOLED CHILLER WITH HYDRONIC MODULE (TWO PUMPS ONE ON, ONE STAND-BY). AXIAL FANS OF SCROLL COMPRESSORS.
LOCATION	SITE/GROUND LEVEL
SERVED AREA	ALL AREAS
TYPE	AIR COOLED CHILLER ONLY AXIAL FANS OF SCROLL COMPRESSOR
NO.OF COMPRESSORS	6
REFRIGERANT TYPE	R-407C
NO.OF REFRIGERANT CIRCUITS	2
NO.OF FANS	8
EFFICIENCY RATIO	2.73
CAPACITY (KW)	345
FLOW RATE (L/S)	16.6
ENTERING WATER TEMP. (°C)	7
LEAVING WATER TEMP. (°C)	12
AMBIENT TEMP. (°C)	43
MIN. OPERATING TEMP. (°C)	-10
MAX. OPERATING TEMP. (°C)	50
COEFFICIENT OF PERFORMANE	2.73
POWER INPUT IN COOLING(KW)	172.3
POWER OF FANS (KW)	12.6
POWER OF EACH PUMP (KW)	4.5
POWER SUPPLY	380/3/50
QTY.	1
WEIGHT (KG)	4020
APPROXIMATE DIMENSIONS(MM)	5135X2230X2323(LXWXH)

NOTES:
- EVAPORATOR WATER (IN/OUT) = 12/7°C ; CONDENSER AIR (IN) = 43°C
-NOTE FOR ELECTRICAL LOAD, MUST SUM COMPRESSORS POWER+FANS POWER+PUMPS POWER.

GROUND FLOOR

FANCOIL UNITS SCHEDULE

FAN COIL NO.	TYPE	AIR FLOW (L/S)	COOLING CAPACITY TOTAL (KW)	COOLING CAPACITY SENSIBLE (KW)	COOLING CAPACITY WATER (L/S)	HEATING CAPACITY TOTAL (KW)	HEATING CAPACITY WATER (L/S)	ELEC. (W)	QTY
FC-G-01	FLOOR MOUNTED	315	4.6	4.1	0.22	2.3	0.11	251	1
FC-G-02	FLOOR MOUNTED	358	5.2	4.5	0.25	2.2	0.11	305	1
FC-G-03	FLOOR MOUNTED	520	7.8	7.0	0.37	4.0	0.19	394	2
FC-G-04	FLOOR MOUNTED	358	6.0	5.3	0.29	2.9	0.14	305	1
FC-G-05	FLOOR MOUNTED	204	3.4	2.7	0.16	1.2	0.06	93	1
FC-G-06	FLOOR MOUNTED	520	7.9	5.6	0.38	2.2	0.11	394	1
FC-G-07	FLOOR MOUNTED	358	6.7	5.0	0.32	1.8	0.09	305	1
FC-G-08	FLOOR MOUNTED	520	7.4	5.2	0.36	2.3	0.11	394	1
FC-G-09	FLOOR MOUNTED	315	3.7	3.3	0.18	1.5	0.07	251	1
FC-G-10	FLOOR MOUNTED	315	3.7	3.3	0.18	1.5	0.07	251	1
FC-G-11	FLOOR MOUNTED	204	2.8	2.4	0.13	1.4	0.07	93	1
FC-G-12	FLOOR MOUNTED	315	3.5	3.0	0.17	1.6	0.08	251	2
FC-G-13	FLOOR MOUNTED	358	6.3	5.9	0.30	1.7	0.08	305	1
FC-G-14	FLOOR MOUNTED	358	6.3	5.9	0.30	1.7	0.08	305	1
FC-G-15	FLOOR MOUNTED	358	6.4	6.0	0.30	1.7	0.08	305	1
FC-G-16	FLOOR MOUNTED	358	6.7	6.3	0.32	1.8	0.08	305	1
FC-G-17	FLOOR MOUNTED	358	6.7	6.3	0.32	1.8	0.08	305	1
FC-G-18	CEILING MOUNTED	358	5.7	4.9	0.27	3.0	0.14	305	1
FC-G-19	FLOOR MOUNTED	315	2.2	1.9	0.11	1.0	0.05	125	2
FC-G-20	CEILING MOUNTED	520	7.4	5.4	0.36	2.9	0.14	394	2
FC-G-21	FLOOR MOUNTED	204	3.2	2.7	0.15	1.4	0.07	93	1
FC-G-22	FLOOR MOUNTED	204	2.2	1.9	0.11	1.0	0.05	93	1
FC-G-23	FLOOR MOUNTED	520	7.6	6.8	0.33	3.4	0.16	394	1
FC-G-24	FLOOR MOUNTED	315	4.7	4.3	0.23	1.3	0.06	251	1
FC-G-25	FLOOR MOUNTED	358	5.3	4.8	0.25	2.7	0.13	305	1
FC-G-26	FLOOR MOUNTED	358	6.6	5.8	0.32	3.4	0.16	305	2
FC-G-27	FLOOR MOUNTED	520	7.3	5.2	0.35	2.3	0.11	394	3
FC-G-28	FLOOR MOUNTED	315	4.0	3.5	0.19	1.9	0.09	251	1
FC-G-29	FLOOR MOUNTED	600	9.5	6.8	0.46	3.1	0.15	553	5
FC-G-30	FLOOR MOUNTED	315	4.2	3.5	0.20	1.7	0.08	251	1
FC-G-31	FLOOR MOUNTED	204	3.0	2.6	0.14	1.3	0.06	93	1
FC-G-32	FLOOR MOUNTED	600	10.3	8.0	0.49	4.0	0.19	553	2
FC-G-33	FLOOR MOUNTED	520	8.7	6.5	0.42	3.7	0,18	394	1
FC-G-34	FLOOR MOUNTED	204	3.0	2.7	0.14	1.1	0.05	93	1
FC-G-35	FLOOR MOUNTED	204	3.2	2.8	0.15	1.2	0.06	93	1
FC-G-36	FLOOR MOUNTED	358	5.1	4.1	0.24	1.9	0.09	305	1
FC-G-37	FLOOR MOUNTED	204	3.3	3.0	0.16	1.4	0.07	93	1
FC-G-38	FLOOR MOUNTED	204	3.0	2.7	0.14	1.2	0.06	93	1
FC-G-39	FLOOR MOUNTED	204	3.2	2.9	0.15	1.3	0.06	93	1
FC-G-40	FLOOR MOUNTED	520	7.2	5.3	0.35	2.9	0.14	394	1
FC-G-41	FLOOR MOUNTED	520	8.3	6.1	0.40	3.2	0.15	394	6
TOTAL(KW)			355.2			135.8			

PUMPS SCHEDULE

PUMP DESCRIPTION	SERVED AREA OR EQUIPMENT	LOCATION	FLOW (L/S)	HEAD (M)	MOTOR DATA RPM	KW	ø	VOLTS	QUANTITY ON DUTY	STAND BY	TOTAL	TYPE
CIRCULATING PUMP (HWSP-1)	HOT WATER CYLINDER	MECHANICAL ROOM	2.0	10	1450	0.5	3	380	1	1	2	CENTRIFUGAL END SUCTION CONSTANT SPEED
CIRCULATING PUMP (HWSP-2)	SECONDARY PUMP HEATING CIRCUIT	MECHANICAL ROOM	13.5	35	1450	8.0	3	380	1	1	2	CENTRIFUGAL END SUCTION VARIABLE SPEED PUMP
CIRCULATING PUMP (CHWSP)	SECONDARY PUMP COOLING CIRCUIT	MECHANICAL ROOM	33.1	35	1450	19.0	3	380	1	1	2	CENTRIFUGAL END SUCTION VARIABLE SPEED PUMP

SCHEDULE OF VESSELS TANKS

REF. / EQUIPMENT DESIGNATION	LOCATION	DESCRIPTION	QUANTITY	DUTY	STAND BY	CAPACITY (L)	WORKING PRESSURE (Bar)
EX-VESSEL(1) (FOR HEAT CIRCUIT)	MECHANICAL ROOM	DIAPHRAGM TYPE INCLUDING :- A-EXPANSION TANK	1	–	–	100	6.0
EX-VESSEL(2) (FOR COOLING CIRCUIT)	MECHANICAL ROOM	DIAPHRAGM TYPE INCLUDING :- A-EXPANSION TANK	1	–	–	200	6.0

FIRST & UPPER FIRST FLOORS

FANCOIL UNITS SCHEDULE

FAN COIL NO.	TYPE	AIR FLOW (L/S)	COOLING CAPACITY TOTAL (KW)	COOLING CAPACITY SENSIBLE (KW)	COOLING CAPACITY WATER (L/S)	HEATING CAPACITY TOTAL (KW)	HEATING CAPACITY WATER (L/S)	ELEC. (W)	QTY
FC-F-01	FLOOR MOUNTED	358	5.4	5.1	0.26	2.3	0.11	305	1
FC-F-02	FLOOR MOUNTED	358	4.9	4.6	0.24	2.0	0.10	305	1
FC-F-03	FLOOR MOUNTED	315	4.3	4.0	0.21	1.7	0.08	251	1
FC-F-04	FLOOR MOUNTED	315	4.2	3.9	0.20	2.5	0.12	251	1
FC-F-05	FLOOR MOUNTED	358	5.3	4.8	0.25	2.2	0.11	305	1
FC-F-06	FLOOR MOUNTED	358	4.7	4.2	0.23	2.5	0.12	305	1
FC-F-07	FLOOR MOUNTED	520	7.4	6.6	0.36	3.6	0.17	394	1
FC-F-08	FLOOR MOUNTED	358	4.7	4.3	0.23	2.2	0.11	305	1
FC-F-09	FLOOR MOUNTED	315	4.1	3.9	0.20	1.8	0.09	251	1
FC-F-10	FLOOR MOUNTED	358	5.6	5.2	0.27	2.8	0.13	305	1
FC-F-11	FLOOR MOUNTED	600	9.8	8.9	0.47	4.0	0.19	553	1
FC-F-12	FLOOR MOUNTED	358	6.3	5.8	0.30	3.0	0.14	305	1
FC-F-13	FLOOR MOUNTED	358	5.1	4.6	0.24	2.6	0.13	305	1
FC-F-14	FLOOR MOUNTED	358	4.9	4.5	0.24	2.2	0.11	305	1
FC-F-15	FLOOR MOUNTED	358	4.8	4.4	0.23	2.2	0.11	305	1
FC-F-16	FLOOR MOUNTED	358	6.3	5.8	0.30	2.9	0.14	305	1
FC-F-17	FLOOR MOUNTED	358	6.6	6.1	0.32	3.2	0.15	305	1
FC-F-18	FLOOR MOUNTED	204	2.9	2.7	0.14	1.6	0.08	102	1
FC-F-19	FLOOR MOUNTED	315	4.5	4.3	0.22	2.3	0.11	251	1
FC-F-20	FLOOR MOUNTED	358	5.0	4.6	0.24	2.3	0.11	305	1
FC-F-21	FLOOR MOUNTED	315	3.8	3.6	0.18	2.0	0.10	251	1
FC-F-22	FLOOR MOUNTED	358	6.2	5.6	0.30	2.7	0.13	305	1
FC-F-23	FLOOR MOUNTED	520	7.8	7.0	0.36	3.0	0.14	394	1
FC-F-24	FLOOR MOUNTED	520	7.4	6.7	0.34	3.0	0.14	394	1
FC-F-25	FLOOR MOUNTED	520	7.0	6.2	0.33	2.9	0.14	394	1
FC-F-26	FLOOR MOUNTED	520	7.6	6.6	0.36	3.2	0.15	394	1
FC-F-27	FLOOR MOUNTED	520	7.5	6.5	0.36	3.1	0.15	394	1
FC-F-28	FLOOR MOUNTED	520	8.0	6.8	0.38	3.4	0.15	394	1
FC-F-29	FLOOR MOUNTED	600	9.7	8.6	0.46	4.7	0.23	553	1
FC-F-30	FLOOR MOUNTED	520	8.7	7.3	0.41	4.0	0.17	394	1
FC-F-31	FLOOR MOUNTED	600	10.5	7.7	0.49	5.2	0.25	553	1
FC-F-32	FLOOR MOUNTED	600	9.6	7.9	0.46	4.7	0.20	553	1
FC-F-33	FLOOR MOUNTED	600	10.7	8.8	0.49	5.1	0.24	553	1
FC-UF-01	FLOOR MOUNTED	520	6.8	6.2	0.33	2.8	0.13	394	2
FC-UF-02	FLOOR MOUNTED	358	6.0	5.4	0.29	3.1	0.15	305	1
TOTAL(KW)			230.9			105.6			

-FANCOIL TO BE SELECTED ON MEDIUM SPEED
-ENTERING/LEAVING WATER TEMP.FOR COOLING (7°C/12°C)
-ENTERING/LEAVING WATER TEMP.FOR HEATING (45°C/40°C)
-INDOOR TEMP.FOR COOLING (23°C)
-INDOOR TEMP.FOR HEATING (23°C)

NOTES & LEGEND:

EUROPEAN UNION

UNDP 50 YEARS — Empowered lives. Resilient nations.

دولة فلسطين وزارة السياحة والآثار

PROJECT:

Securing Professional Services for the Architectural Restoration and Rehabilitation Designs, Archaeological Documentation and Orientation Training, Including Tender Documents Preparation and Site Supervision for Conservation and Rehabilitation Works of Maqam Al-Nabi Musa in Jericho Governorate

Support to Development of Cultural Tourism

DESIGN WORKS:
-Jerusalem Design Center

ELECTRICAL WORKS:
-Eng .Midhat AlSharif

MECHANICAL WORKS:
-Elite Mechanical Consultants

SHEET NAME:
SCHEDULE OF EQUIPMENTS-2

SCALE: N.T.S

EDITION: MECHANICAL

- [ ] For Review
- [ ] For Approval
- [x] For Tender
- [ ] For Construction

SHEET NO. M601

DATE: July-2016

JerusalemDesignCenter
Architects, Engineers & Consultants
Phone: 02 234 3696 | Fax: 02 234 3719 | Email: info@jdc.ps

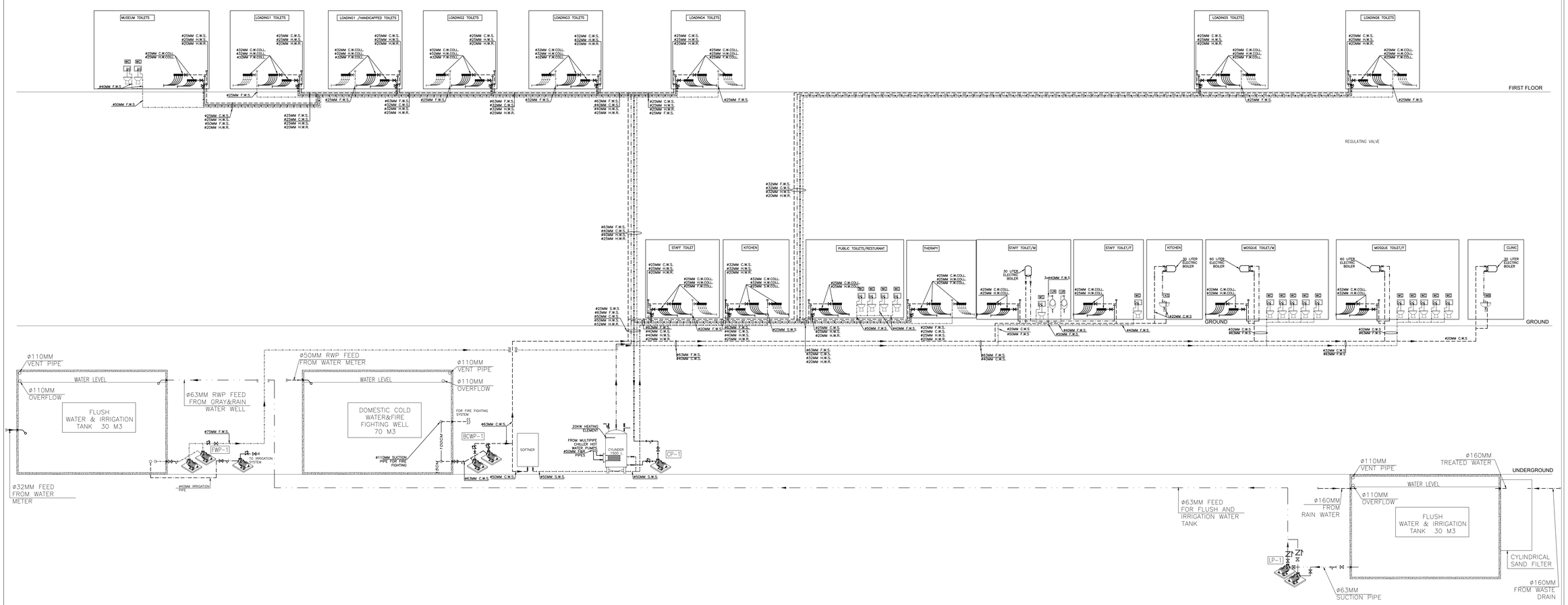

NOTES & LEGEND:

- FLUSH WATER P.P.R PIPE
- SOFT WATER P.P.R PIPE
- HOT RETURN P.P.R PIPE
- HOT WATER P.P.R PIPE
- DOMESTIC COLD WATER P.P.R PIPE
- HOT WATER POLYETHYLENE PIPE
- COLD WATER POLYETHYLENE PIPE
- GAS SOFT COPPER PIPE
- FLUSH WATER POLYETHYLENE PIPE
- IRRIGATION PIPE
- FLOW PIPE FROM HEAT PUMP
- RETURN PIPE TO HEAT PUMP
- FLOW&RETURN TO SOLAR PANELS
- SHUT OFF VALVE
- PIPE VENT
- STRAINER
- NON RETURN VALVE
- PRESSURE REDUCING VALVE
- AUTOMATIC AIR VENT
- REGULATING VALVE

EUROPEAN UNION

Empowered lives. Resilient nations.

PROJECT:

Securing Professional Services for the Architectural Restoration and Rehabilitation Designs, Archaeological Documentation and Orientation Training, Including Tender Documents Preparation and Site Supervision for Conservation and Rehabilitation Works of Maqam Al-Nabi Musa in Jericho Governorate

Support to Development of Cultural Tourism

DESIGN WORKS:

-Jerusalem Design Center

ELECTRICAL WORKS:

-Eng .Midhat AlSharif

MECHANICAL WORKS:

-Elite Mechanical Consultants

SHEET NAME:

SCHEMATIC FOR WATER PIPING

SCALE: N.T.S

EDITION: MECHANICAL

- [ ] For Review
- [ ] For Approval
- [x] For Tender
- [ ] For Construction

SHEET NO. M602

DATE: July-2016

JerusalemDesignCenter
Architects, Engineers & Consultants
Phone: 02 234 3696 | Fax: 02 234 3779 | Email: info@jdc.ps

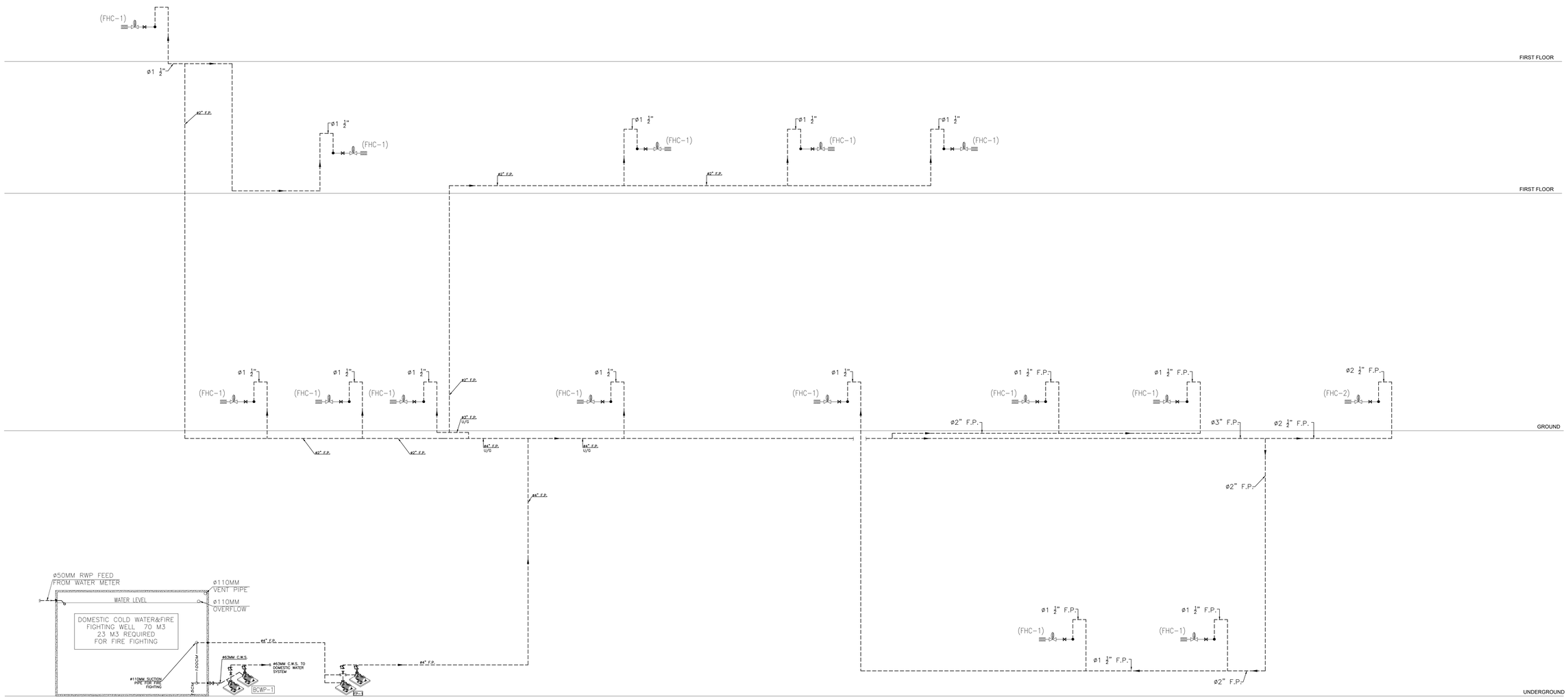

NOTES & LEGEND:

FHC-1 FHC-1
ø25 MM, 30M LONG HOSE REEL WITH COMBINED PRESSURE REDUCING TO LIMIT PRESSURE TO 2.4 BAR
4.5 POWDER FIRE EXTINGUISHER
5KG CO2 FIRE EXTINGUISHER

FHC-2 FHC-2
ø65 MM, 30M LONG HOSE RACK PRESSURE REDUCING TO LIMIT PRESSURE TO 4.5 BAR
4.5 POWDER FIRE EXTINGUISHER
5KG CO2 FIRE EXTINGUISHER

F.P. FIRE PIPE

PRESSURE REDUCING VALVE

SHUT OFF VALVE

STRAINER

NON RETURN VALVE

EUROPEAN UNION

Empowered lives. Resilient nations.

PROJECT:

Securing Professional Services for the Architectural Restoration and Rehabilitation Designs, Archaeological Documentation and Orientation Training, Including Tender Documents Preparation and Site Supervision for Conservation and Rehabilitation Works of Maqam Al-Nabi Musa in Jericho Governorate

Support to Development of Cultural Tourism

DESIGN WORKS:

-Jerusalem Design Center

ELECTRICAL WORKS:

-Eng .Midhat AlSharif

MECHANICAL WORKS:

-Elite Mechanical Consultants

SHEET NAME:

SCHEMATIC FOR FIRE FIGHTING

SCALE: N.T.S

EDITION: MECHANICAL

- [ ] For Review
- [ ] For Approval
- [x] For Tender
- [ ] For Construction

SHEET NO. M603

DATE: July-2016

JerusalemDesignCenter
Architects, Engineers & Consultants
Phone: 02 234 3696 | Fax: 02 234 3719 | Email: info@jdc.ps

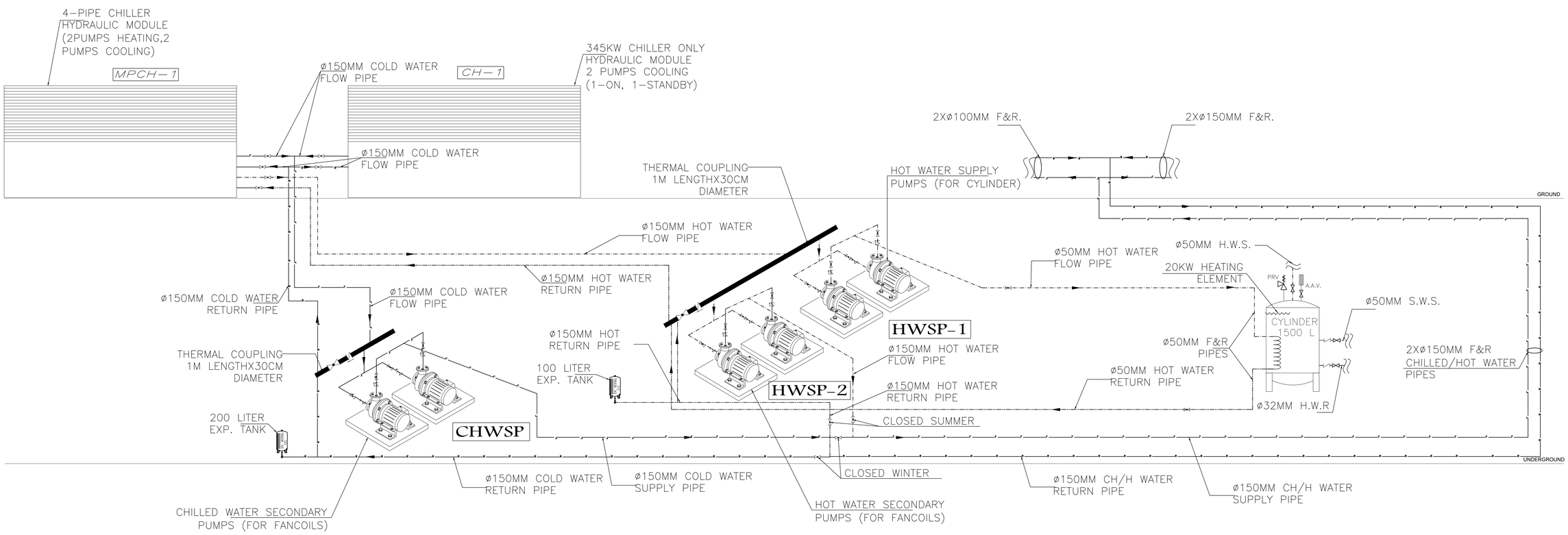

NOTES & LEGEND:

- GATE VALVE
- NON-RETURN VALVE
- CIRCULATING PUMP
- PRESSURE GAGE
- TEMPERATURE GAGE
- FLOW SWITCH
- AUTOMATIC AIR VENT
- PRESSURE RELIEF VALVE
- FUEL FILTER
- BUTTERFLY VALVE

- HOT WATER FLOW
- HOT WATER RETURN
- COLD WATER FLOW
- COLD WATER RETURN

EUROPEAN UNION

Empowered lives. Resilient nations.

PROJECT:

Securing Professional Services for the Architectural Restoration and Rehabilitation Designs, Archaeological Documentation and Orientation Training, Including Tender Documents Preparation and Site Supervision for Conservation and Rehabilitation Works of Maqam Al-Nabi Musa in Jericho Governorate

Support to Development of Cultural Tourism

DESIGN WORKS:

-Jerusalem Design Center

ELECTRICAL WORKS:

-Eng .Midhat AlSharif

MECHANICAL WORKS:

-Elite Mechanical Consultants

SHEET NAME:

SCHEMATIC FOR CHILLERS &PUMPS

SCALE: N.T.S

EDITION: MECHANICAL

- [ ] For Review
- [ ] For Approval
- [x] For Tender
- [ ] For Construction

SHEET NO: M604

DATE: July-2016

JerusalemDesignCenter
Architects, Engineers & Consultants

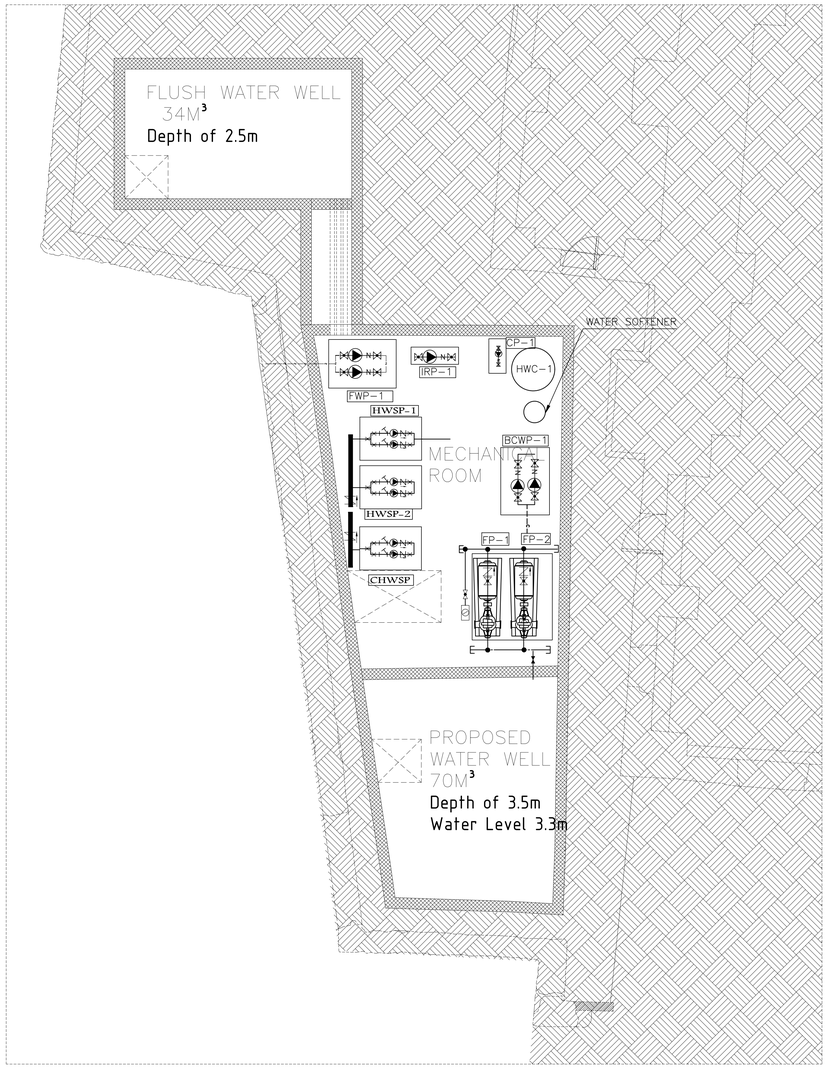

NOTES & LEGEND:

EUROPEAN UNION

UNDP 50 YEARS Empowered lives. Resilient nations.

PROJECT:

Securing Professional Services for the Architectural Restoration and Rehabilitation Designs, Archaeological Documentation and Orientation Training, Including Tender Documents Preparation and Site Supervision for Conservation and Rehabilitation Works of Maqam Al-Nabi Musa in Jericho Governorate

Support to Development of Cultural Tourism

DESIGN WORKS:

-Jerusalem Design Center

ELECTRICAL WORKS:

-Eng .Midhat AlSharif

MECHANICAL WORKS:

-Elite Mechanical Consultants

SHEET NAME:

PUMP ROOM

EQUIPMENT LAYOUT

SCALE: 1:50 (IF PILOTED ON A0)

EDITION: MECHANICAL

- [ ] For Review
- [ ] For Approval
- [x] For Tender
- [ ] For Construction

SHEET NO. M605

DATE: July-2016

JerusalemDesignCenter
Architects, Engineers & Consultants
Phone: 02 234 3696 | Fax: 02 234 3770 | Email: info@jdc.ps

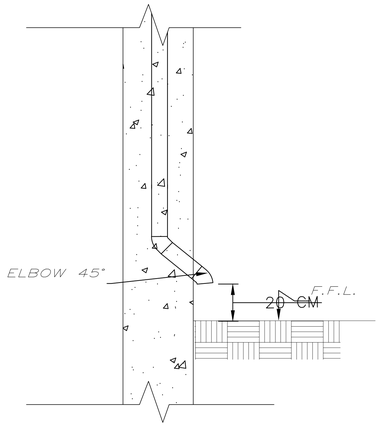

4 RAIN WATER FREE DISCHARGE

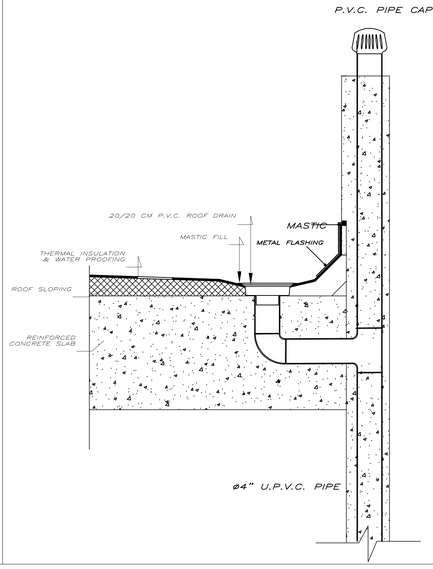

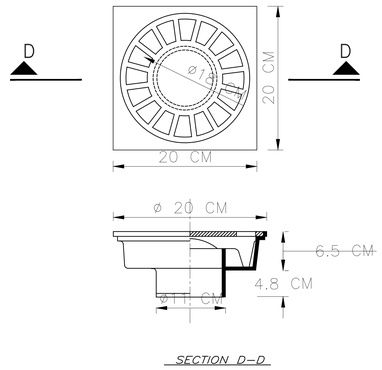

3 RAIN WATER DRAIN & PIPE

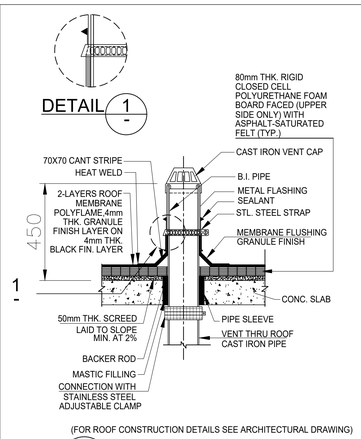

2 VENT TERMINAL DETAIL

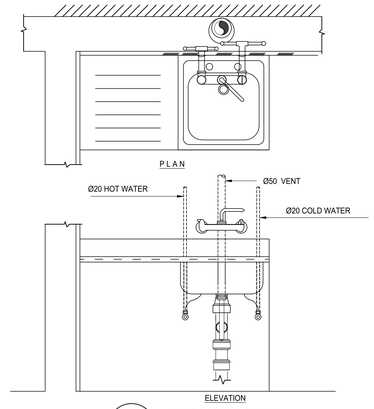

1 KITCHEN SINK

NOTES & LEGEND:

FHC-1 — FHC-1 #25 MM, 30M LONG HOSE REEL WITH COMBINED PRESSURE REDUCING TO LIMIT PRESSURE TO 4.5 BAR 4.5 POWDER FIRE EXTINGUISHER 5KG CO2 FIRE EXTINGUISHER

FHC-2 — FHC-2 #65 MM, 30M LONG HOSE RACK PRESSURE REDUCING TO LIMIT PRESSURE TO 4.5 BAR 4.5 POWDER FIRE EXTINGUISHER 5KG CO2 FIRE EXTINGUISHER

F.P. — FIRE PIPE

PRESSURE REDUCING VALVE

SHUT OFF VALVE

STRAINER

NON RETURN VALVE

PIPE SIZE (NOMINAL)	SLEEVE SIZE (NOMINAL)
6" (150 mm)	8" (200 mm)
4" (100 mm)	6" (150 mm)
3" (75 mm)	4" (100 mm)
2 1/2" (63 mm)	4" (100 mm)
2" (50 mm)	3" (75 mm)
1 1/4" (32 mm)	3" (75 mm)
1" (25 mm)	2" (50 mm)
3/4" (20 mm)	1 1/2" (38 mm)
1/2" (15 mm)	1" (25 mm)

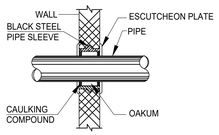

8 PIPE SLEEVE THROUGH WALL

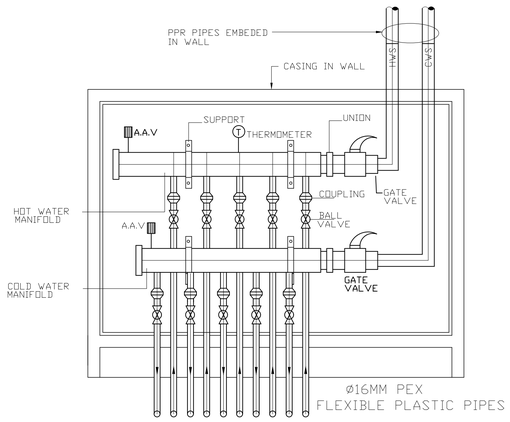

7 TYPICAL DETAIL OF WATER DISTRIBUTION CABIET N.T.S

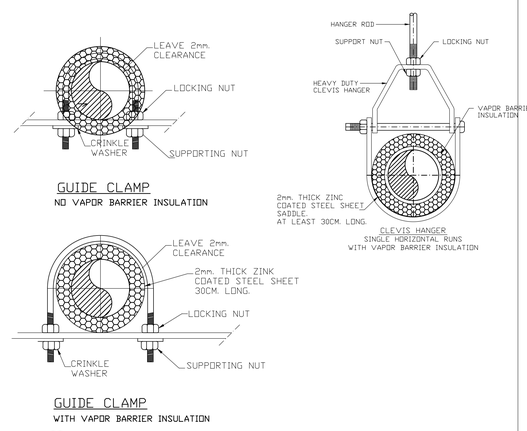

6 DETAILS OF THE PIPE SUPPORTS

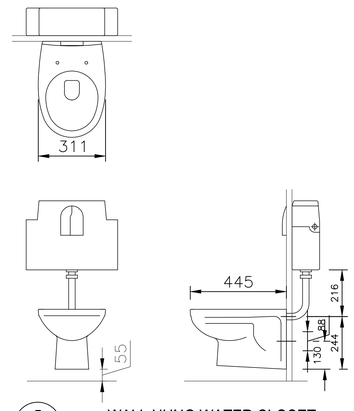

5 WALL HUNG WATER CLOSET
INSTALLATION DETAIL

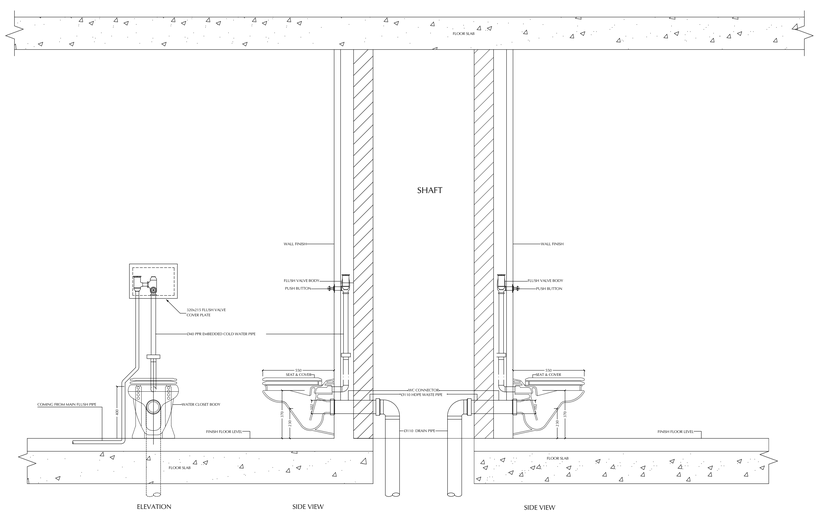

12 BACK TO BACK WATER CLOSET INSTALLATION SHOWING FLUSH VALVE IN 25 CM WALL THICKNESS

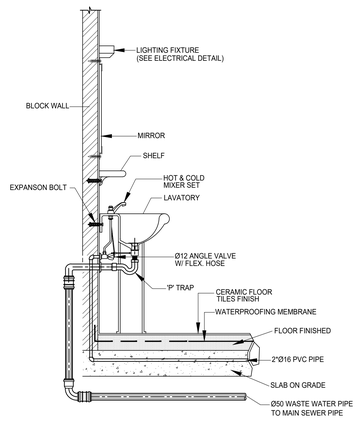

11 LAVATORY DETAIL

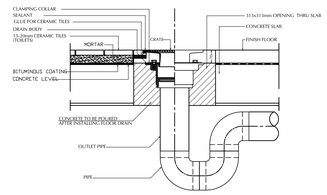

FLOOR DRAIN IN TIOLETS

10 FLOOR DRAIN DETAIL

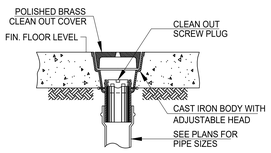

9 FLOOR CLEAN OUT DETAIL

EUROPEAN UNION — Empowered lives. Resilient nations. — UNDP 50 YEARS

PROJECT:

Securing Professional Services for the Architectural Restoration and Rehabilitation Designs, Archaeological Documentation and Orientation Training, Including Tender Documents Preparation and Site Supervision for Conservation and Rehabilitation Work: of Maqam Al-Nabi Musa in Jericho Governorate

Support to Development of Cultural Tourism

DESIGN WORKS: -Jerusalem Design Center

ELECTRICAL WORKS: -Eng .Midhat AlSharif

MECHANICAL WORKS: -Elite Mechanical Consultants

SHEET NAME: MECHANICAL DETAILS—1

SCALE: N.T.S

EDITION: MECHANICAL

- For Review
- For Approval
- For Tender
- For Construction

SHEET NO. M606

DATE: July-2016

JerusalemDesignCenter Architects, Engineers & Consultants

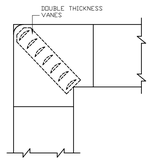

16 VANED SQUARE ELBOW

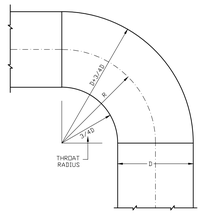

15 FULL RADIUS RECTANGULAR ELBOW

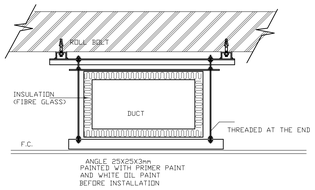

17 DUCT SUSPENSION FROM CEILING

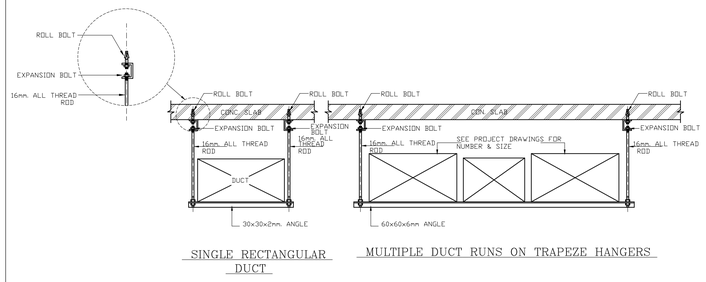

SINGLE RECTANGULAR DUCT

MULTIPLE DUCT RUNS ON TRAPEZE HANGERS

14 DETAILS OF THE INSTALLATION OF HANGERS AND SUPPORTS FOR DUCTWORK

13 CYLINDRICAL SAND FILTER

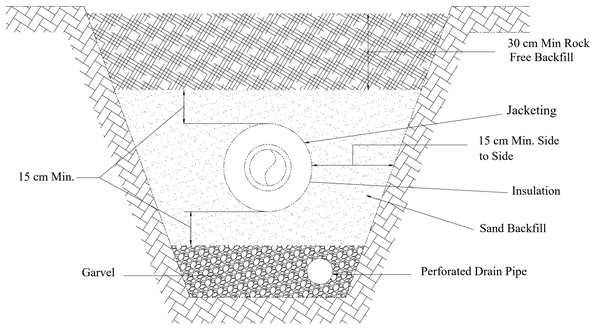

19 AC PIPING INSULATION DETAIL FOR UNDERGROUND AND UNDERTILE PIPES

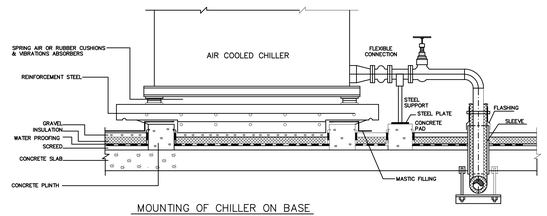

MOUNTING OF CHILLER ON BASE (TYPICAL)

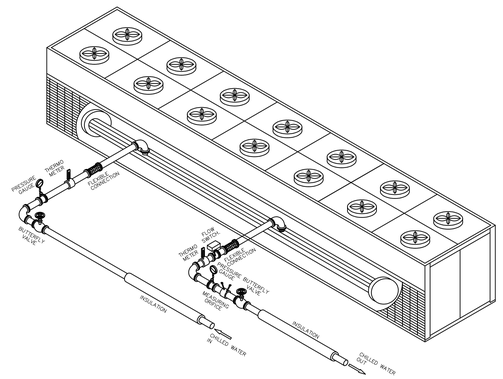

18 AIR COOLED PACKAGED WATER CHILLER CONNECTIONS(TYPICAL)

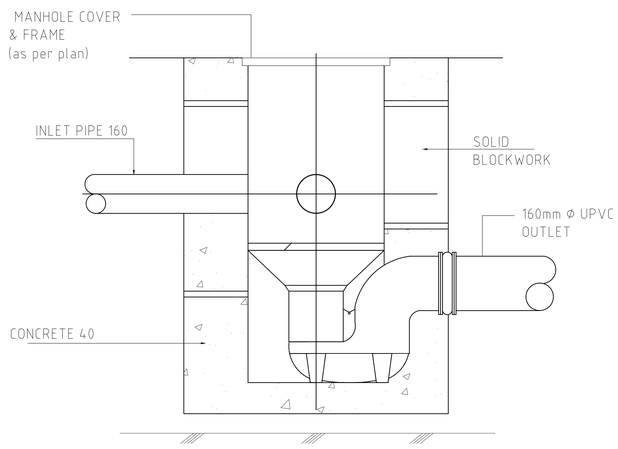

20 GULLY TRAP DETAIL

NOTES & LEGEND:

FHC-1 — FHC-1 #25 MM, 30M LONG HOSE REEL WITH COMBINED PRESSURE REDUCING TO LIMIT PRESSURE TO 4.5 BAR 4.5 POWDER FIRE EXTINGUISHER 5KG CO2 FIRE EXTINGUISHER

FHC-2 — FHC-2 #65 MM, 30M LONG HOSE RACK PRESSURE REDUCING TO LIMIT PRESSURE TO 4.5 BAR 4.5 POWDER FIRE EXTINGUISHER 5KG CO2 FIRE EXTINGUISHER

F.P. — FIRE PIPE

PRESSURE REDUCING VALVE

SHUT OFF VALVE

STRAINER

NON RETURN VALVE

EUROPEAN UNION — Empowered lives. Resilient nations.

PROJECT:

Securing Professional Services for the Architectural Restoration and Rehabilitation Designs, Archaeological Documentation and Orientation Training, Including Tender Documents Preparation and Site Supervision for Conservation and Rehabilitation Works of Maqam Al-Nabi Musa in Jericho Governorate

Support to Development of Cultural Tourism

DESIGN WORKS:

-Jerusalem Design Center

ELECTRICAL WORKS:

-Eng .Midhat AlSharif

MECHANICAL WORKS:

-Elite Mechanical Consultants

SHEET NAME:

MECHANICAL DETAILS-2

SCALE: N.T.S

EDITION: MECHANICAL

- [ ] For Review
- [ ] For Approval
- [x] For Tender
- [ ] For Construction

SHEET NO: M607

DATE: July-2016

JerusalemDesignCenter
Architects, Engineers & Consultants
Phone: 02 234 3696 | Fax: 02 234 3719 | Email: info@jdc.ps

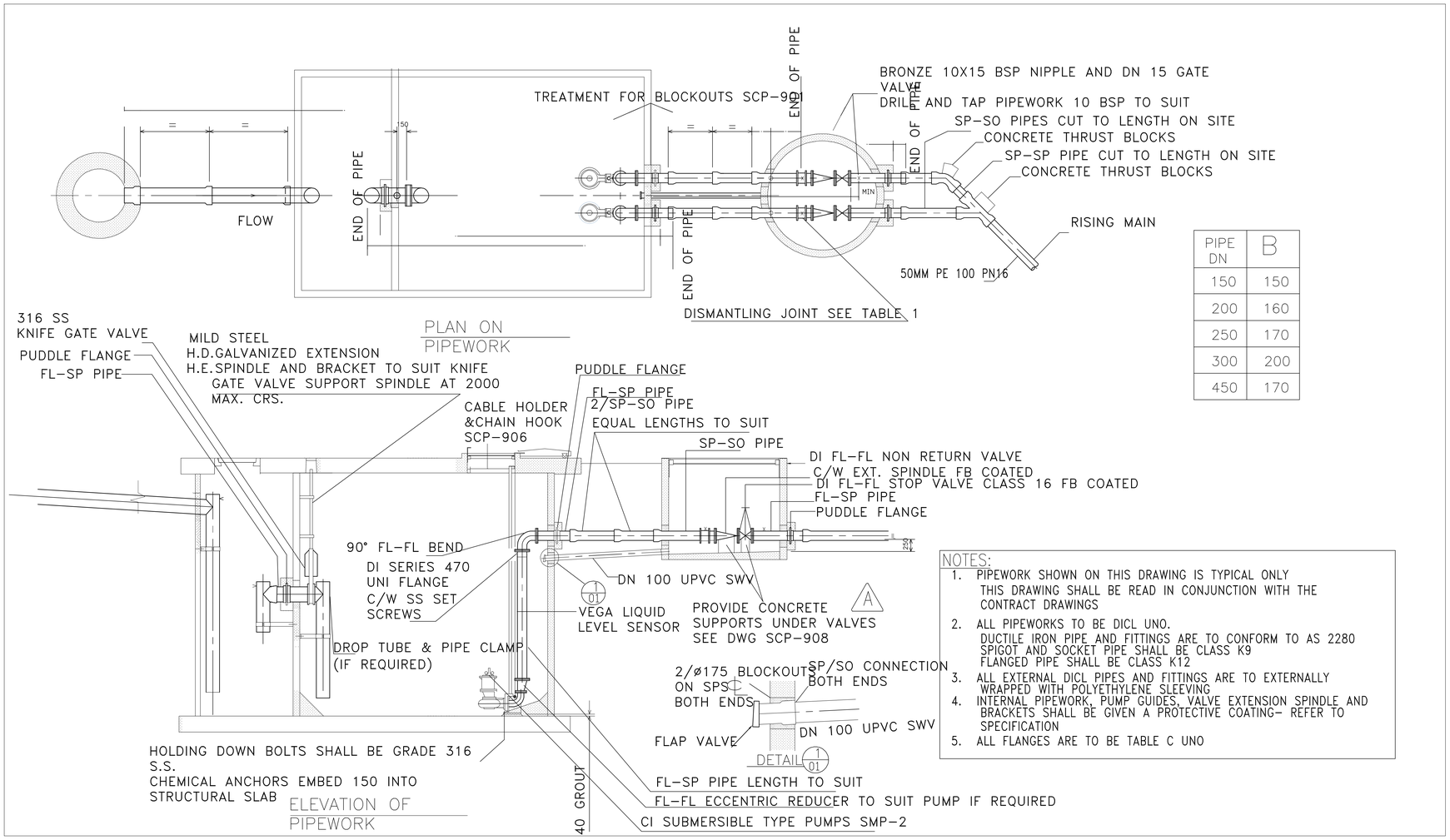

PIPE DN	B
150	150
200	160
250	170
300	200
450	170

NOTES:

1. PIPEWORK SHOWN ON THIS DRAWING IS TYPICAL ONLY THIS DRAWING SHALL BE READ IN CONJUNCTION WITH THE CONTRACT DRAWINGS
2. ALL PIPEWORKS TO BE DICL UNO. DUCTILE IRON PIPE AND FITTINGS ARE TO CONFORM TO AS 2280 SPIGOT AND SOCKET PIPE SHALL BE CLASS K9 FLANGED PIPE SHALL BE CLASS K12
3. ALL EXTERNAL DICL PIPES AND FITTINGS ARE TO EXTERNALLY WRAPPED WITH POLYETHYLENE SLEEVING
4. INTERNAL PIPEWORK, PUMP GUIDES, VALVE EXTENSION SPINDLE AND BRACKETS SHALL BE GIVEN A PROTECTIVE COATING- REFER TO SPECIFICATION
5. ALL FLANGES ARE TO BE TABLE C UNO

DETAIL-1: SEWAGE PUMPING STATIONS TYPICAL PIPEWORK ARRANGEMENT & DETAILS

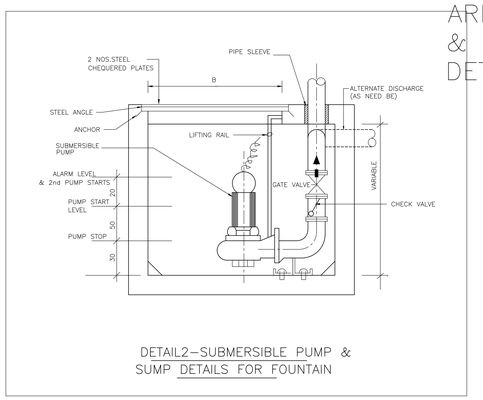

DETAIL2-SUBMERSIBLE PUMP & SUMP DETAILS FOR FOUNTAIN

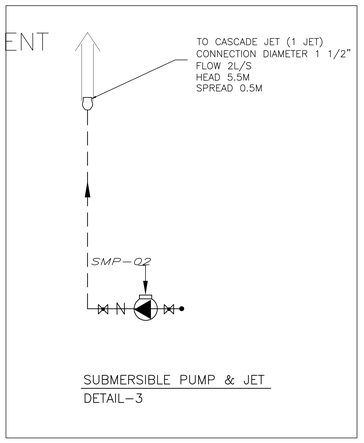

SUBMERSIBLE PUMP & JET
DETAIL-3

NOTES & LEGEND:

EUROPEAN UNION

UNDP 50 YEARS — Empowered lives. Resilient nations.

PROJECT:

Securing Professional Services for the Architectural Restoration and Rehabilitation Designs, Archaeological Documentation and Orientation Training, Including Tender Documents Preparation and Site Supervision for Conservation and Rehabilitation Works of Maqam Al-Nabi Musa in Jericho Governorate

Support to Development of Cultural Tourism

DESIGN WORKS: **-Jerusalem Design Center**

ELECTRICAL WORKS: **-Eng .Midhat AlSharif**

MECHANICAL WORKS: **-Elite Mechanical Consultants**

SHEET NAME: SEWAGE COLLECTION PIT DETAIL

SCALE: N.T.S

EDITION: MECHANICAL

- [ ] For Review
- [ ] For Approval
- [x] For Tender
- [ ] For Construction

SHEET NO. M608

DATE: July-2016

JerusalemDesignCenter
Architects, Engineers & Consultants
Phone: 02 234 3606 | Fax: 02 234 3779 | Email: info@jdc.ps

LPG TANK
QUANTITY = 1

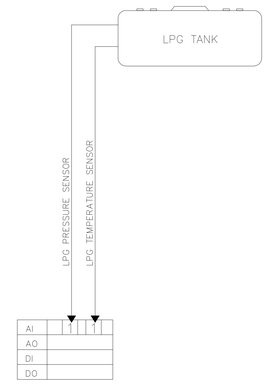

FIELD DEVICES BILL OF MATERIALS		
KEY	QTY	DESCRIPTION
LPS	1	LPG PRESSURE SENSOR
LTS	1	LPG TEMPERATURE SENSOR

DIESEL TANK
QUANTITY = 1

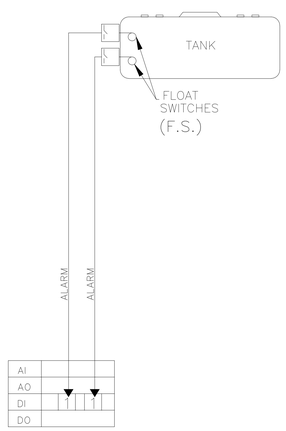

FIELD DEVICES BILL OF MATERIALS		
KEY	QTY	DESCRIPTION
FS	2	FLOAT SWITCH

WATER SOTENER

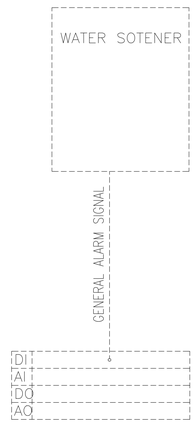

CONTROL SCHEMATIC DIAGRAM FOR HOT WATER SYSTEM

FIELD DEVICES BILL OF MATERIALS		
KEY	QTY	DESCRIPTION
DP	1	DIFFERENTIAL PRESSURE FOR WATER
T	2	IMMERSION TEMP.SENSOR
M	1	FLOW WATER METER

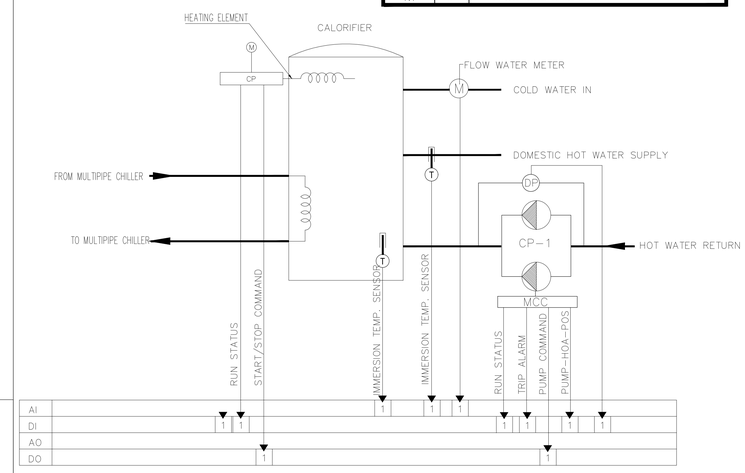

CONTROL SCHEMATIC DIAGRAM FOR GRAY WATER WELL

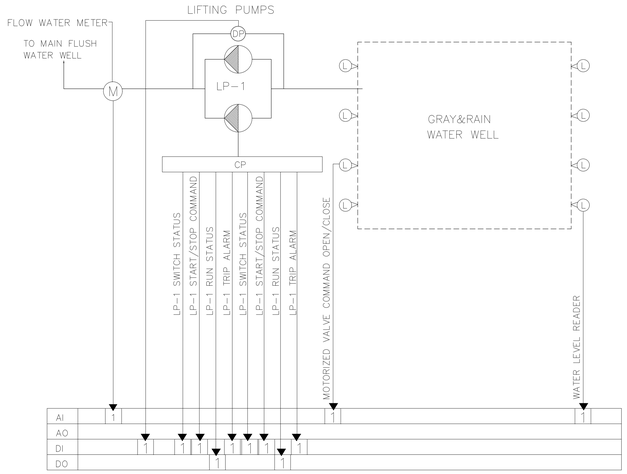

FIELD DEVICES BILL OF MATERIALS		
KEY	QTY	DESCRIPTION
DP	1	WATER DIFFERENTIAL PRESSURE SENSOR
L	1	WATER LEVEL READER
M	1	FLOW WATER METER
MV	1	32MM MOTORIZED DAMPER

CONTROL SCHEMATIC DIAGRAM FOR FLUSH WATER WELL

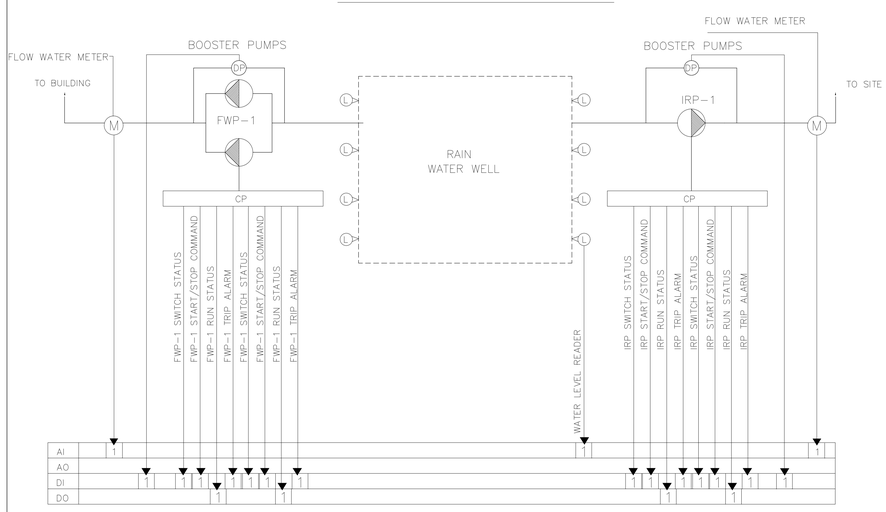

FIELD DEVICES BILL OF MATERIALS		
KEY	QTY	DESCRIPTION
DP	2	WATER DIFFERENTIAL PRESSURE SENSOR
L	1	WATER LEVEL READER
M	2	FLOW WATER METER

DOMESTIC WATER &FIRE PUMPS

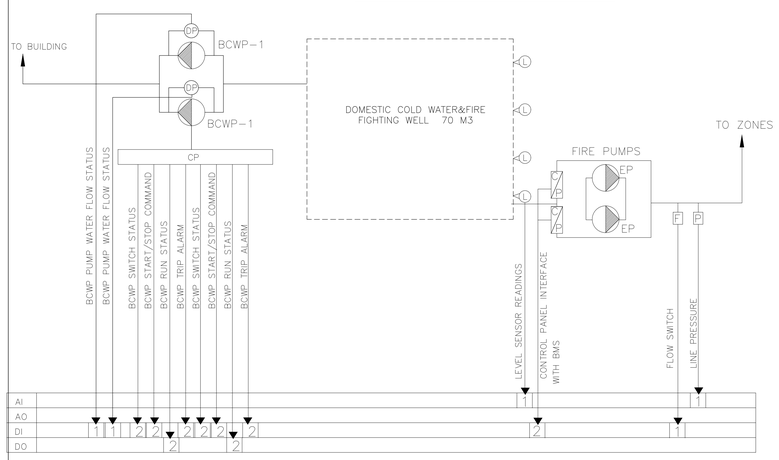

FIELD DEVICES BILL OF MATERIALS		
KEY	QTY	DESCRIPTION
DP	2	WATER DIFFERENTIAL PRESSURE SENSOR
L	1	WATER LEVEL SENSOR
F	1	FLOW SWITCH
P	1	LINE PRESSURE

BUTTERFLY VALVE WITH INDICATOR SWITCH (FIRE CABINETS)
QUANTITY = 15

FM200 SYSTEM

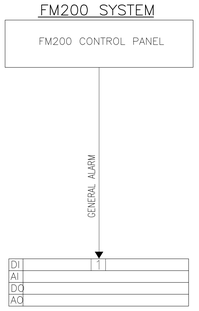

CONTROL SCHEMATIC DIAGRAM FOR LIFT SYSTEM

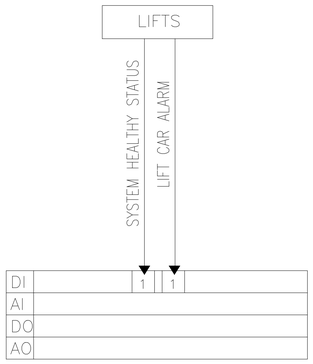

NOTES & LEGEND:

EUROPEAN UNION

Empowered lives. Resilient nations.

PROJECT:

Securing Professional Services for the Architectural Restoration and Rehabilitation Designs, Archaeological Documentation and Orientation Training, Including Tender Documents Preparation and Site Supervision for Conservation and Rehabilitation Works of Maqam Al-Nabi Musa in Jericho Governorate

Support to Development of Cultural Tourism

DESIGN WORKS:
-Jerusalem Design Center

ELECTRICAL WORKS:
-Eng .Midhat AlSharif

MECHANICAL WORKS:
-Elite Mechanical Consultants

SHEET NAME:
BMS DIAGRAM-1

SCALE: N.T.S

EDITION: MECHANICAL

- [ ] For Review
- [ ] For Approval
- [x] For Tender
- [ ] For Construction

SHEET NO. M700

DATE: July-2016

JerusalemDesignCenter
Architects, Engineers & Consultants

FANCOILS

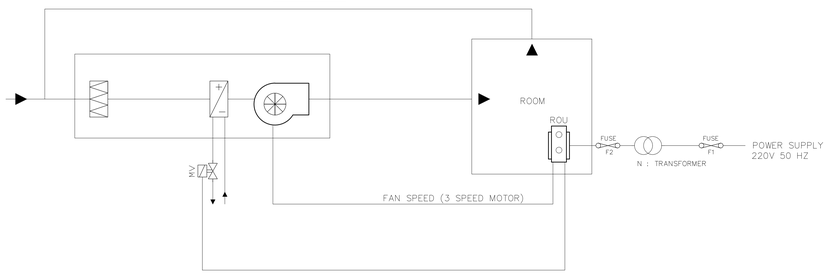

FIELD DEVICES BILL OF MATERIALS		
KEY	QTY	DESCRIPTION
MV	74	#20MM MOTORIZED 2 WAY VALVE
	29	#25MM MOTORIZED 2 WAY VALVE
ROU	103	ROOM OPERATING UNIT

TYPICAL AXIAL EXTRACT FAN

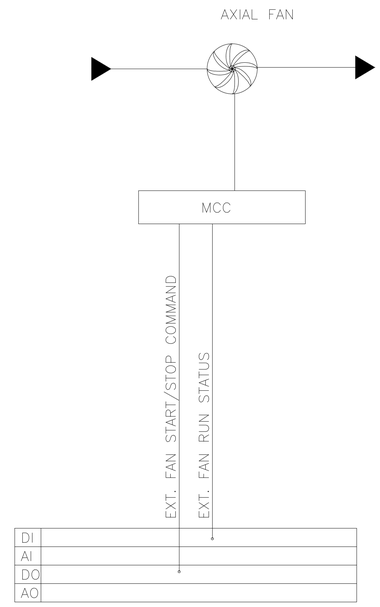

CONTROL SCHEMATIC DIAGRAM FOR DUCTED FANS

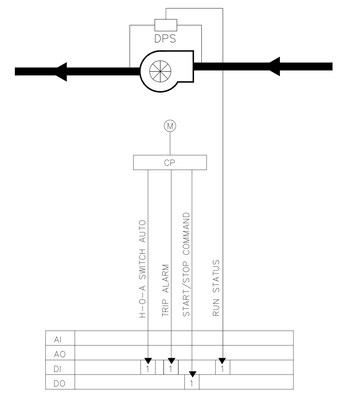

FIELD DEVICES BILL OF MATERIALS		
KEY	QTY	DESCRIPTION
DPS	4	DIFFERENTIAL PRESSURE SENSOR FOR AIR

CHILLERS CIRCUIT

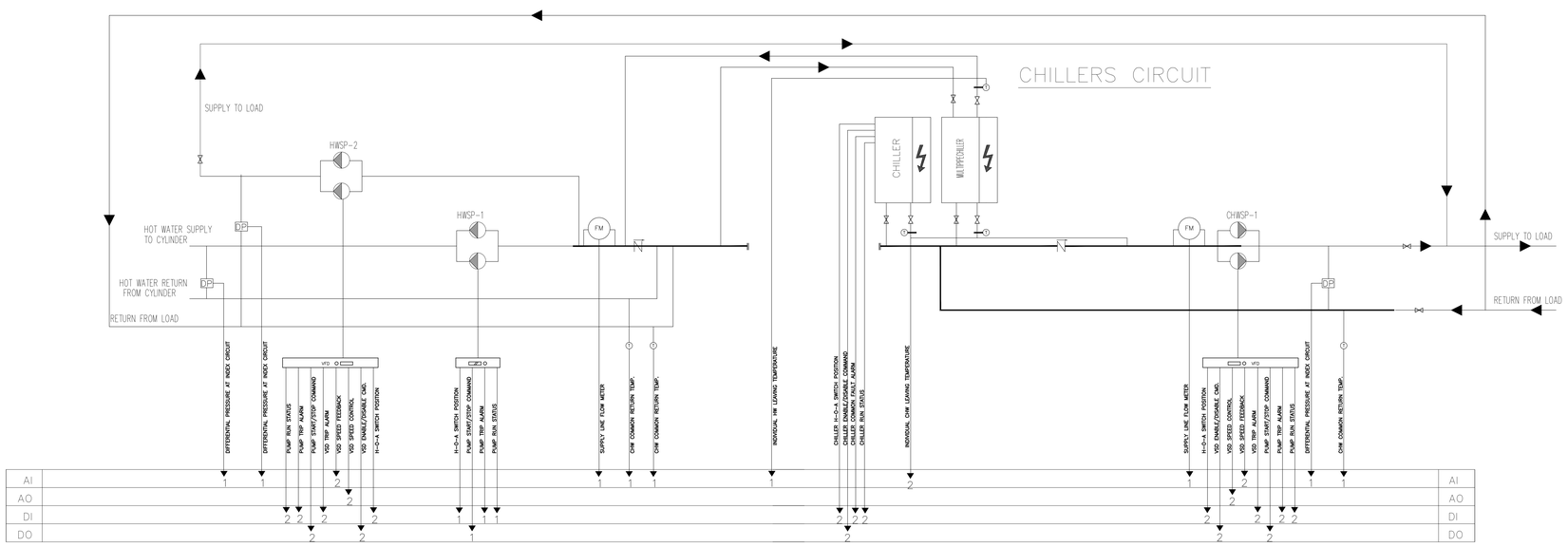

FIELD DEVICES BILL OF MATERIALS		
KEY	QTY	DESCRIPTION
T	6	IMMERSION WATER TEMPRATURE SENSOR
DP	3	DIFFERENTIAL PRESSURE SENSOR
FM	2	FLOW METER

CONTROL SCHEMATIC DIAGRAM DRAINAGE PUMPS / SUMP PUMPS(2*SUMP PITS)

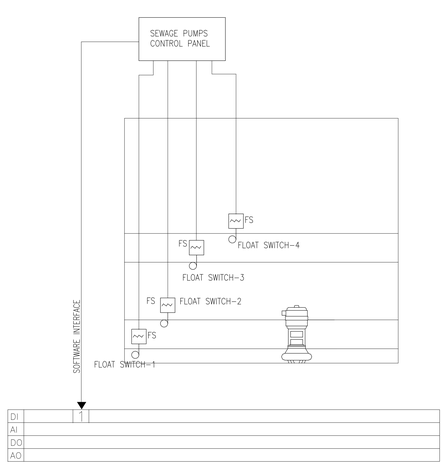

a. FOR FLOAT SWITCH-1; A LOW LEVEL ALARM IS INITIATED
b. FOR FLOAT SWITCH-2; PUMP STOPS
c. FOR FLOAT SWITCH-3; PUMP STARTS
d. FOR FLOAT SWITCH-4; A HIGH LEVEL ALARM IS INITIATED

FIELD DEVICES BILL OF MATERIALS		
KEY	QTY	DESCRIPTION
FS	8	FLOAT SWITCH

NOTES & LEGEND:

EUROPEAN UNION

Empowered lives. Resilient nations.

PROJECT:

Securing Professional Services for the Architectural Restoration and Rehabilitation Designs, Archaeological Documentation and Orientation Training, Including Tender Documents Preparation and Site Supervision for Conservation and Rehabilitation Works of Maqam Al-Nabi Musa in Jericho Governorate

Support to Development of Cultural Tourism

DESIGN WORKS:

-Jerusalem Design Center

ELECTRICAL WORKS:

-Eng .Midhat AlSharif

MECHANICAL WORKS:

-Elite Mechanical Consultants

SHEET NAME:

BMS DIAGRAM-2

SCALE: N.T.S

EDITION: MECHANICAL

- [ ] For Review
- [ ] For Approval
- [x] For Tender
- [ ] For Construction

SHEET NO. M701

DATE: July-2016

JerusalemDesignCenter
Architects, Engineers & Consultants
Phone: 02 234 3696 | Fax: 02 234 3779 | Email: info@jdc.ps

FANCOILS

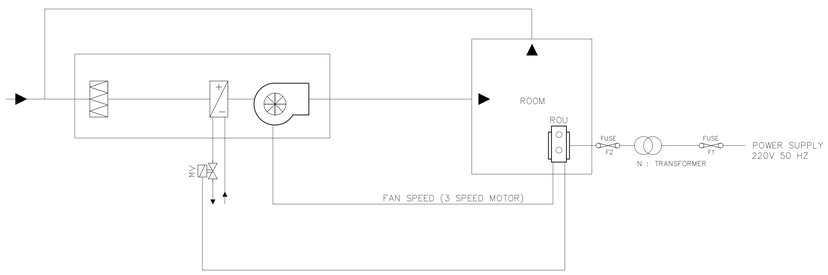

FIELD DEVICES BILL OF MATERIALS		
KEY	QTY	DESCRIPTION
MV	74	#20MM MOTORIZED 2 WAY VALVE
	29	#25MM MOTORIZED 2 WAY VALVE
ROU	103	ROOM OPERATING UNIT

TYPICAL AXIAL EXTRACT FAN

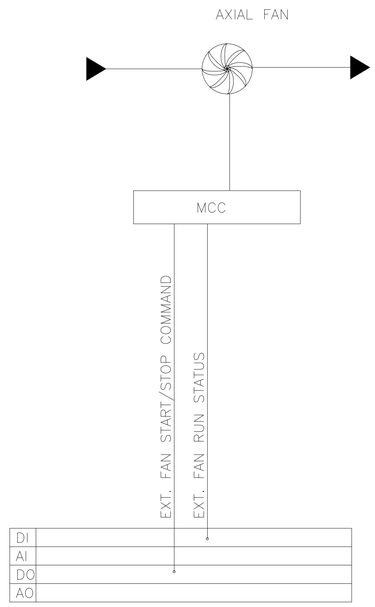

CONTROL SCHEMATIC DIAGRAM FOR DUCTED FANS

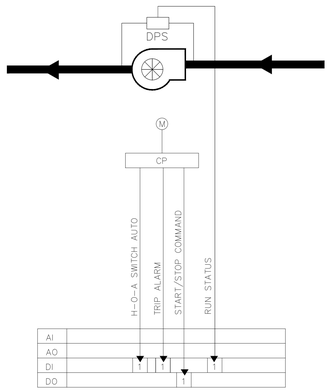

FIELD DEVICES BILL OF MATERIALS		
KEY	QTY	DESCRIPTION
DPS	4	DIFFERENTIAL PRESSURE SENSOR FOR AIR

CHILLERS CIRCUIT

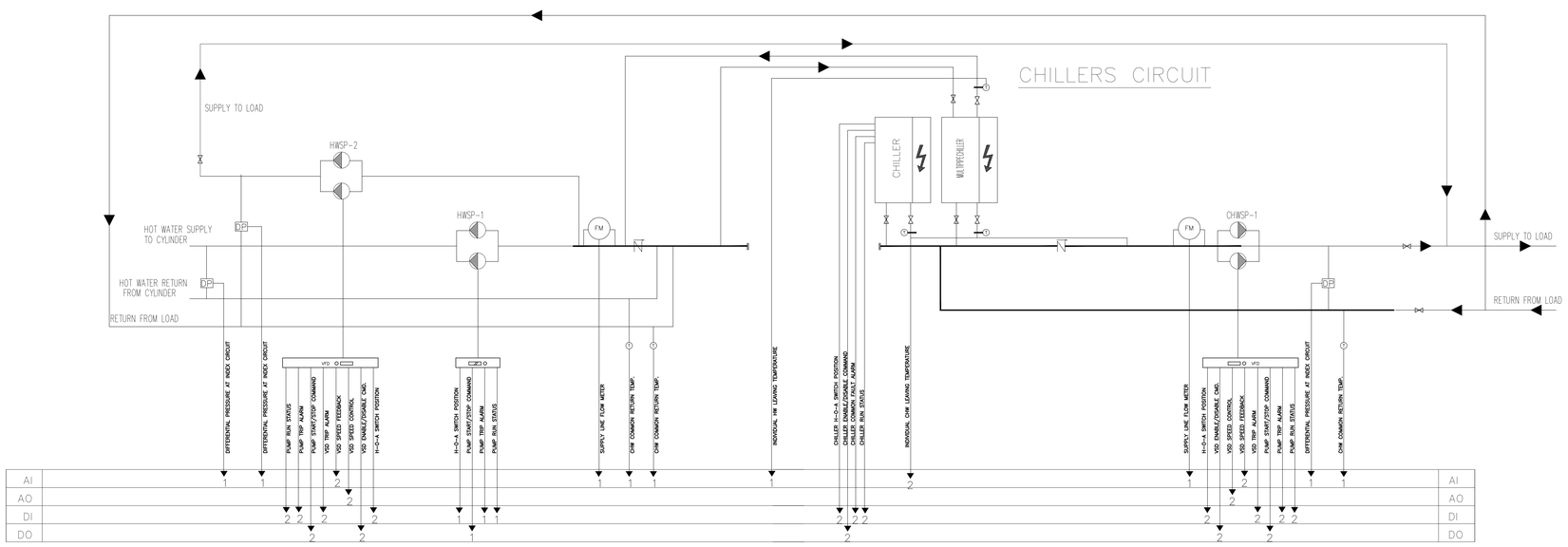

FIELD DEVICES BILL OF MATERIALS		
KEY	QTY	DESCRIPTION
T	6	IMMERSION WATER TEMPRATURE SENSOR
DP	3	DIFFERENTIAL PRESSURE SENSOR
FM	2	FLOW METER

CONTROL SCHEMATIC DIAGRAM DRAINAGE PUMPS / SUMP PUMPS(2*SUMP PITS)

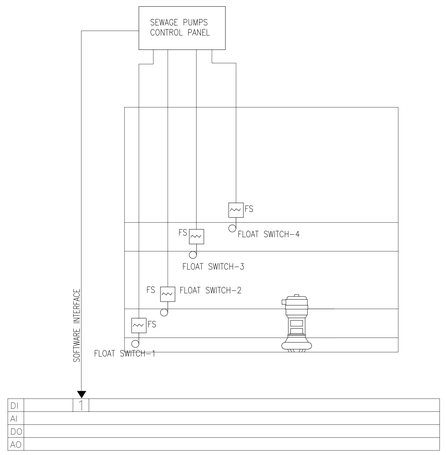

a. FOR FLOAT SWITCH-1; A LOW LEVEL ALARM IS INITIATED
b. FOR FLOAT SWITCH-2; PUMP STOPS
c. FOR FLOAT SWITCH-3; PUMP STARTS
d. FOR FLOAT SWITCH-4; A HIGH LEVEL ALARM IS INITIATED

FIELD DEVICES BILL OF MATERIALS		
KEY	QTY	DESCRIPTION
FS	8	FLOAT SWITCH

NOTES & LEGEND:

EUROPEAN UNION

Empowered lives. Resilient nations.

PROJECT:

Securing Professional Services for the Architectural Restoration and Rehabilitation Designs, Archaeological Documentation and Orientation Training, Including Tender Documents Preparation and Site Supervision for Conservation and Rehabilitation Works of Maqam Al-Nabi Musa in Jericho Governorate

Support to Development of Cultural Tourism

DESIGN WORKS:

-Jerusalem Design Center

ELECTRICAL WORKS:

-Eng .Midhat AlSharif

MECHANICAL WORKS:

-Elite Mechanical Consultants

SHEET NAME:

SCHEMATIC FOR BMS CONTROL

SCALE: N.T.S

EDITION: MECHANICAL

- [ ] For Review
- [ ] For Approval
- [x] For Tender
- [ ] For Construction

SHEET NO. M702

DATE: July-2016

JerusalemDesignCenter
Architects, Engineers & Consultants
Phone: 02 234 3696 | Fax: 02 234 3779 | Email: info@jdc.ps