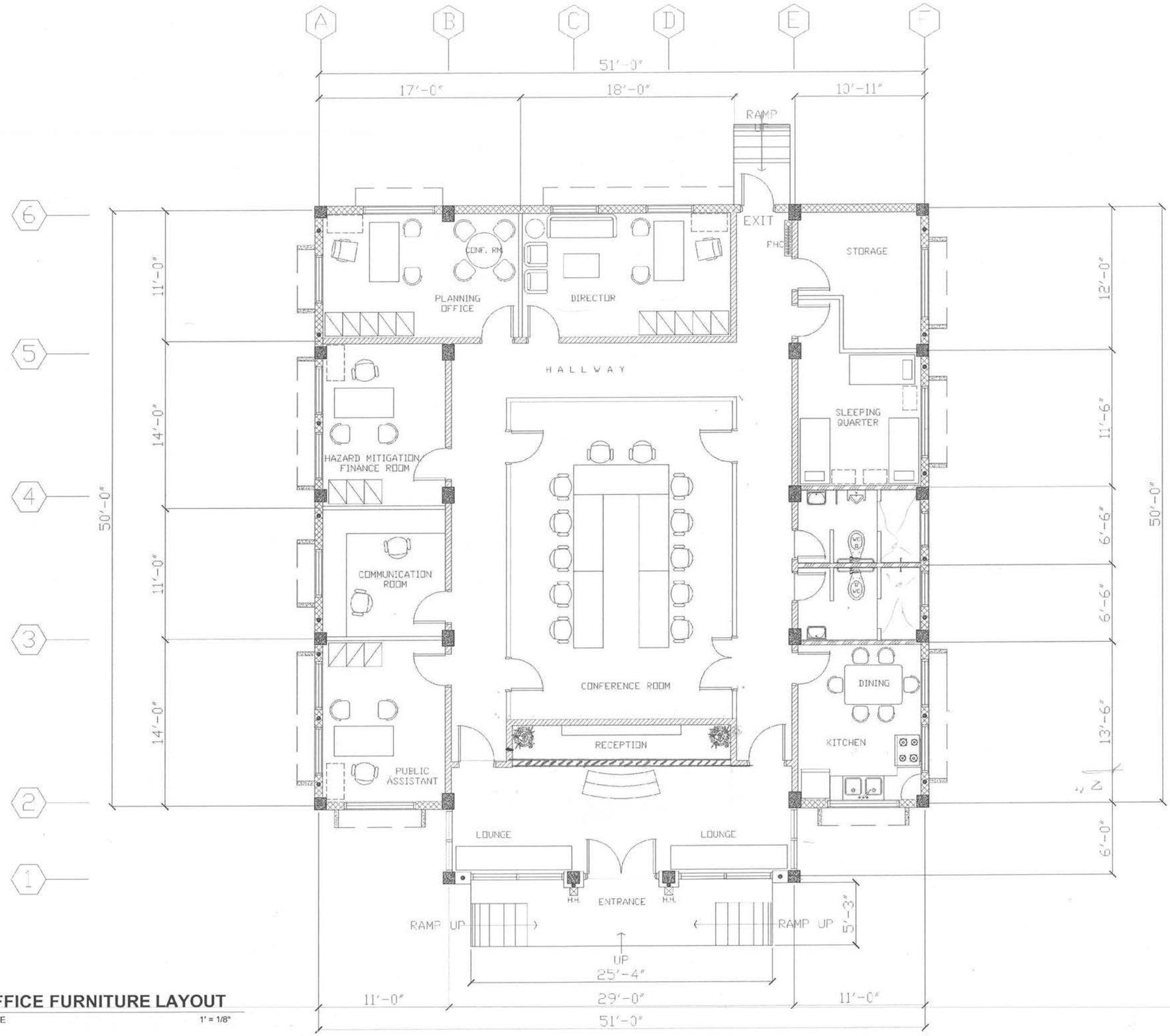

1 A100 **OFFICE FURNITURE LAYOUT**

SCALE 1' = 1/8"

E.O.C. Bldg.

R. S. ROQUE
ARCHITECTS

P.O. Box 6
Kolonia, POHNPEI
FSM 96941
Tel. (691) 320-2966
email add.:
archrsroque@yahoo.com
rai_roque@yahoo.com

CONSULTANT

RYAN SALAS ROQUE
REG. NO. 00040
PHILIPPINES
REGISTERED ARCHITECT

Proposed F.S.M./Office of Environment and Emergency Management Bldg.

Palikir, Pohnpei

CONTENTS
FLOOR PLAN

Approved

Approved

REVISION	BY

DATE: Feb., 2011
SCALE: AS SHOWN
DRAWN:
JOB:
SHEET
A-100

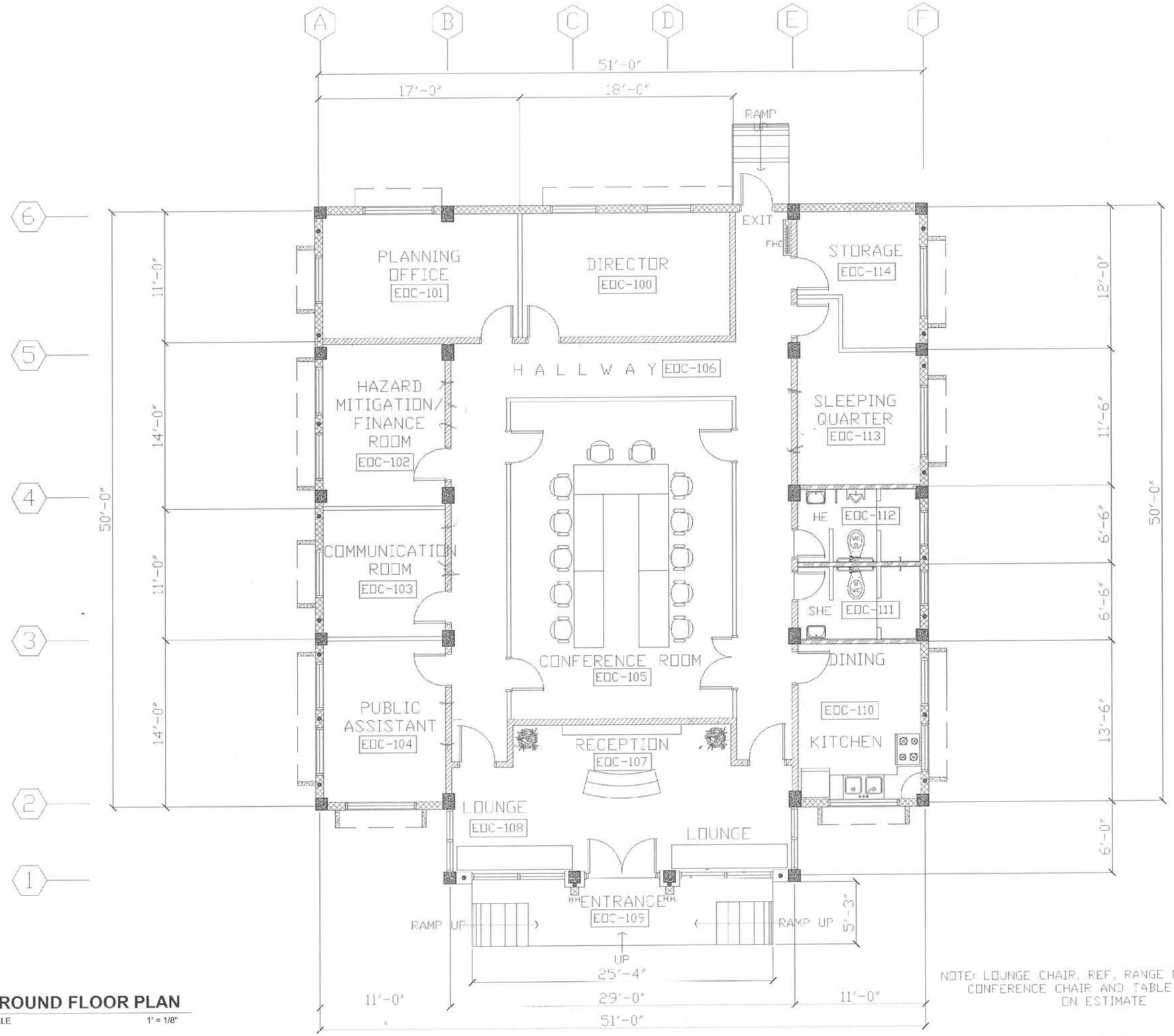

NOTE: LOUNGE CHAIR, REF. RANGE NOT INCLUDED.
CONFERENCE CHAIR AND TABLE INCLUDED
ON ESTIMATE

1 / A101 **GROUND FLOOR PLAN**
SCALE 1' = 1/8"

E.O.C. Bldg.

R. S. ROQUE
ARCHITECTS
P.O. Box 6
Kolonia, POHNPEI
FSM 96941
Tel. (691) 320-2966
email add.:
archrsroque@yahoo.com
rai_roque@yahoo.com

CONSULTANT

RIAN SALAS ROQUE
PRC-EL-0002021
PHILIPPINES
REGISTERED ARCHITECT

Proposed F.S.M./Office of Environment and Emergency Management Bldg.

Palikir, Pohnpei

CONTENTS
FLOOR PLAN

Approved

Approved

REVISION	BY

DATE: Feb., 2011
SCALE: AS SHOWN
DRAWN:
JOB:
SHEET
A-101

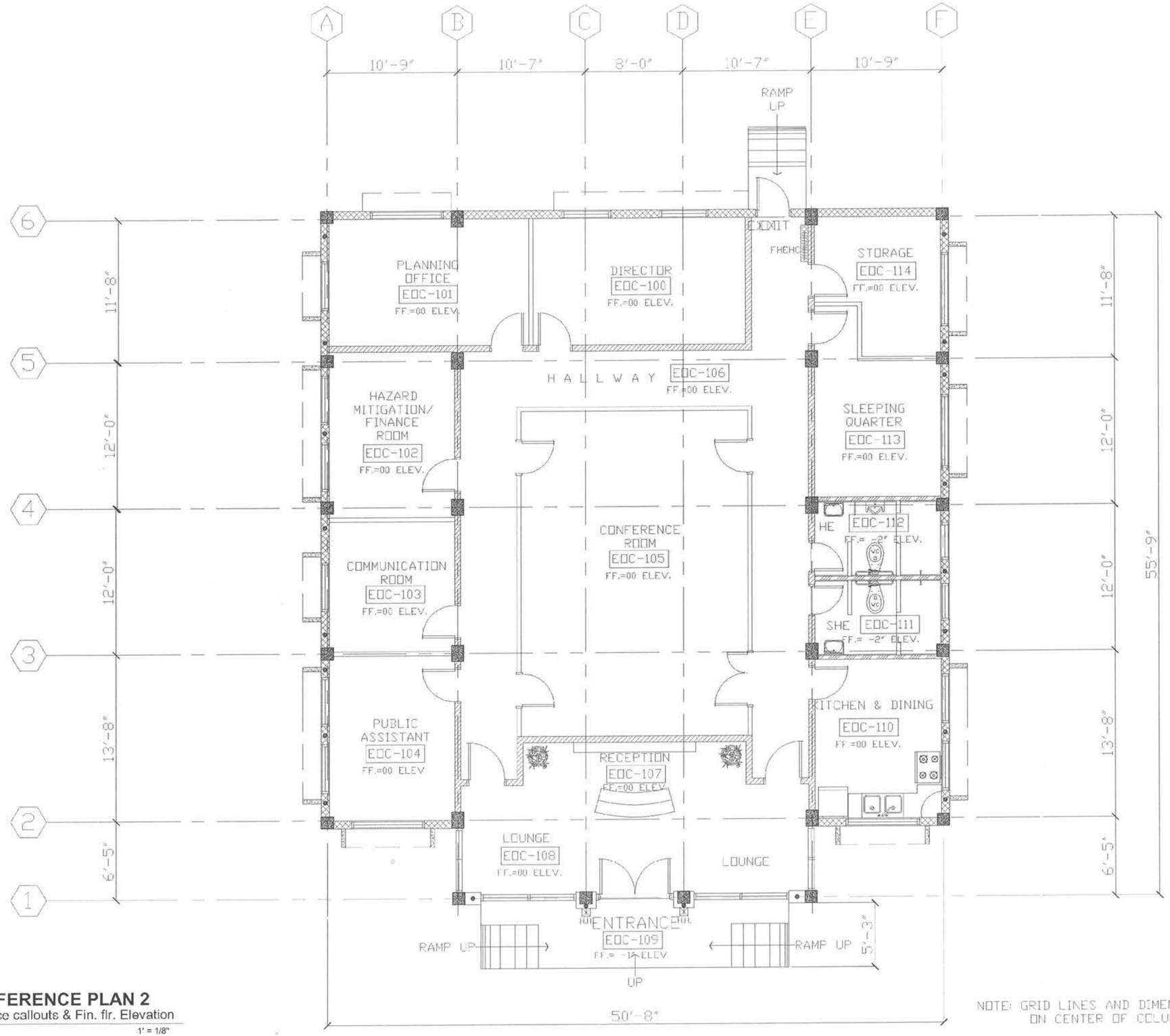

NOTE: GRID LINES AND DIMENSIONS ARE ON CENTER OF COLUMNS

REFERENCE PLAN 2

1 / A102 Space callouts & Fin. flr. Elevation

SCALE 1' = 1/8"

E.O.C. Bldg.

R. S. ROQUE
ARCHITECTS
P.O. Box 6
Kolonia, POHNPEI
FSM 96941
Tel. (691) 320-2966
email add.:
archrsroque@yahoo.com
ral_roque@yahoo.com

CONSULTANT

RYAN SALAS ROQUE
PRC NO 0024015
PHILIPPINES
(REGISTERED ARCHITECT)

Proposed F.S.M./Office of Environment and Emergency Management Bldg.

Palikir, Pohnpei

CONTENTS

REFERENCE PLAN

Approved

Approved

REVISION	BY

DATE: Feb., 2011

SCALE: AS SHOWN

DRAWN:

JOB:

SHEET

A-102

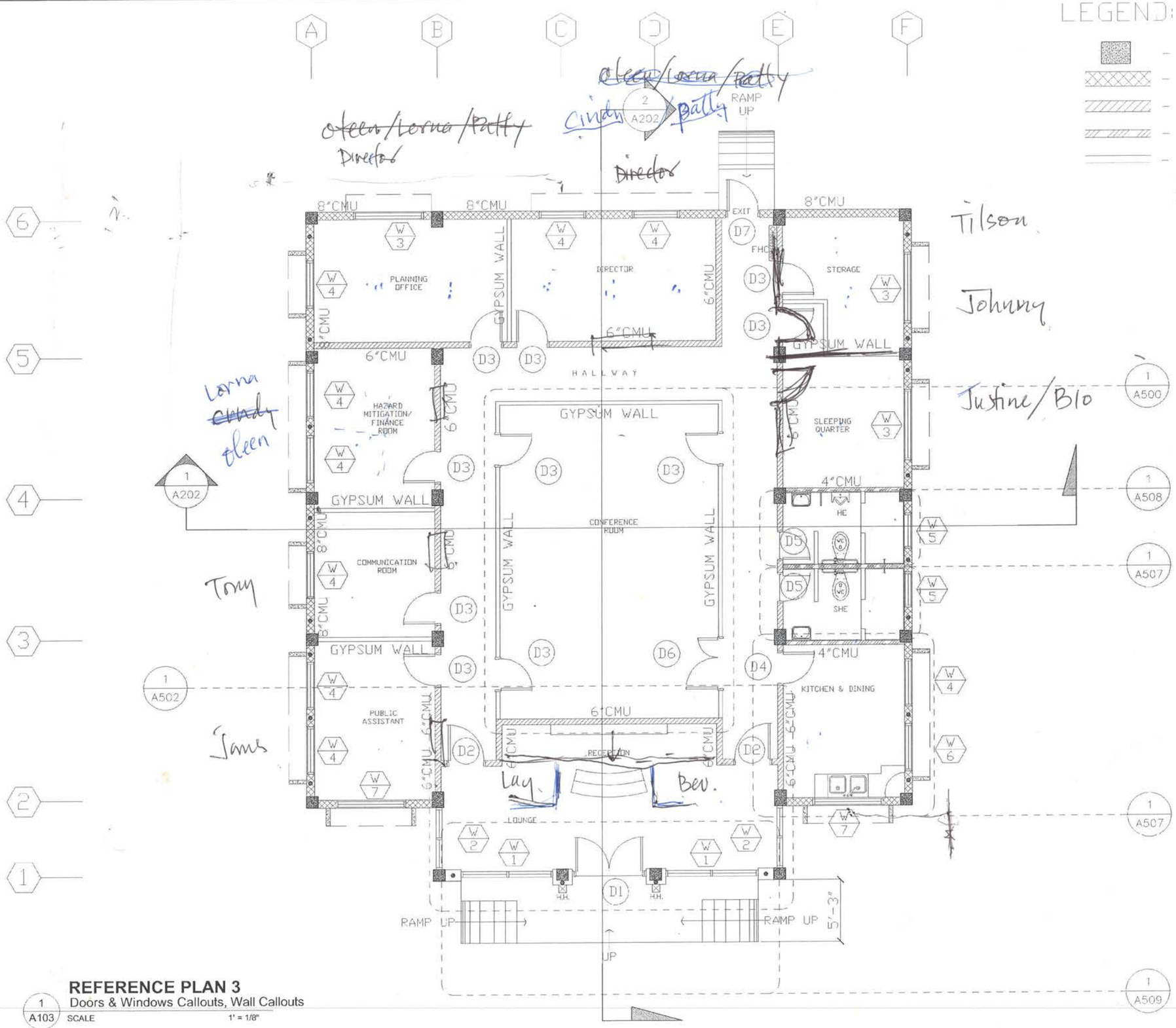

REFERENCE PLAN 3

1 / A103 Doors & Windows Callouts, Wall Callouts

SCALE 1' = 1/8"

R. S. ROQUE
ARCHITECTS
P.O. Box 6
Kolonia, POHNPEI
FSM 96941
Tel. (691) 320-2966
email add.:
archrsroque@yahoo.com
rsl_roque@yahoo.com

CONSULTANT

RYAN SALAS ROQUE
TIN: 43.0.0.0.0.0.3
PHILLIPPINES
REGISTERED ARCHITECT

Proposed F.S.M./Office of Environment and Emergency Management Bldg.

Palikir, Pohnpei

CONTENTS
REFERENCE PLAN

Approved

Approved

REVISION	BY

DATE: Feb., 2011
SCALE: AS SHOWN
DRAWN:
JOB:
SHEET
A-103

E.O.C. Bldg.

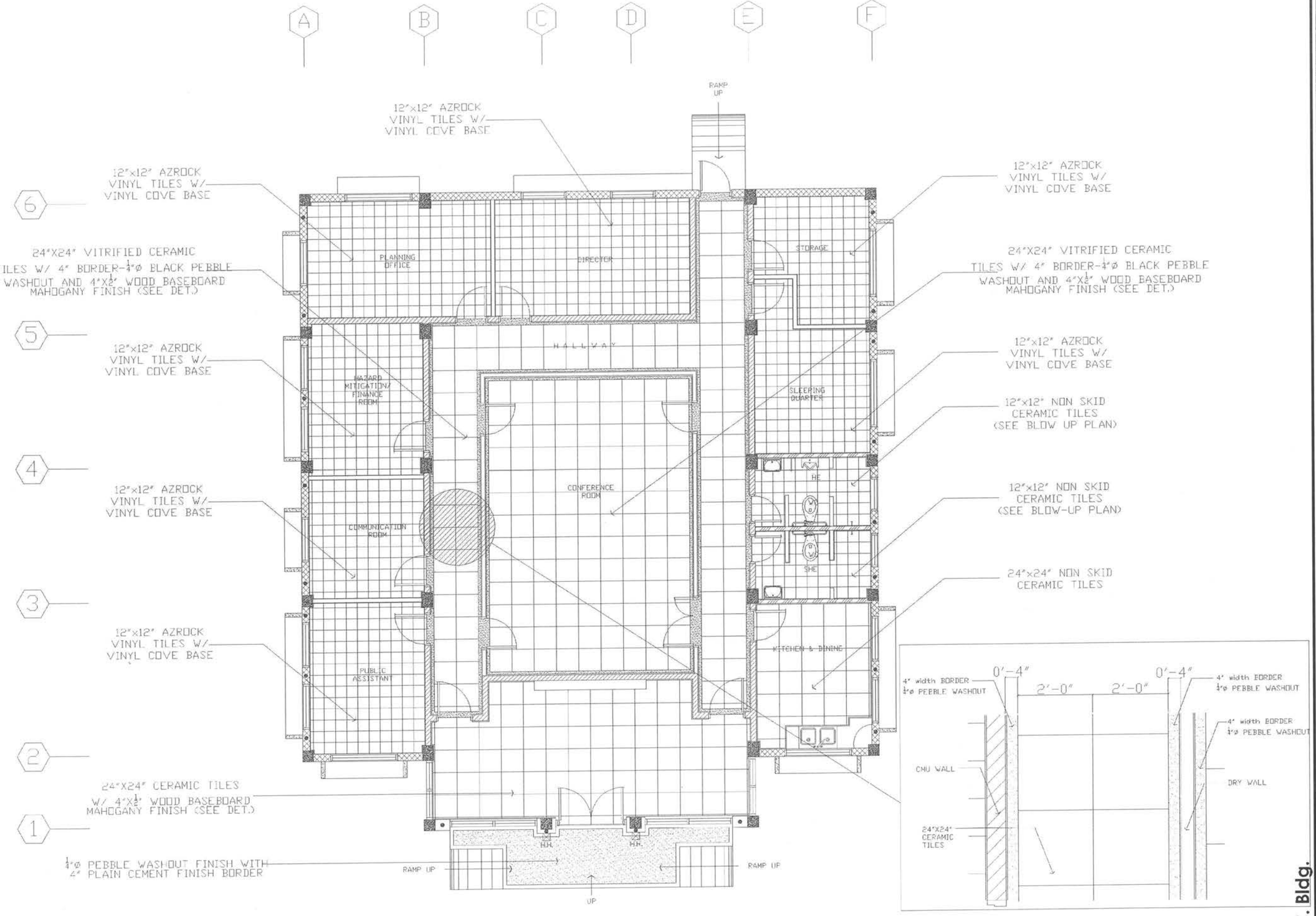

1 A120 **FINISH FLOOR PATTERN**
SCALE 1' = 1/8"

E.O.C. Bldg.

R. S. ROQUE
ARCHITECTS
P.O. Box 6
Kolonia, POHNPEI
FSM 96941
Tel. (691) 320-2966
email add.:
archrsroque@yahoo.com
rai_roque@yahoo.com

CONSULTANT

RYAN SALAS ROQUE
PHILIPPINES
REGISTERED ARCHITECT

Proposed F.S.M./Office of Environment and Emergency Management Bldg.
Palikir, Pohnpei

CONTENTS
FLOOR PATTERN

Approved

Approved

REVISION	BY

DATE: Feb., 2011
SCALE: AS SHOWN
DRAWN:
JOB:
SHEET
A-120

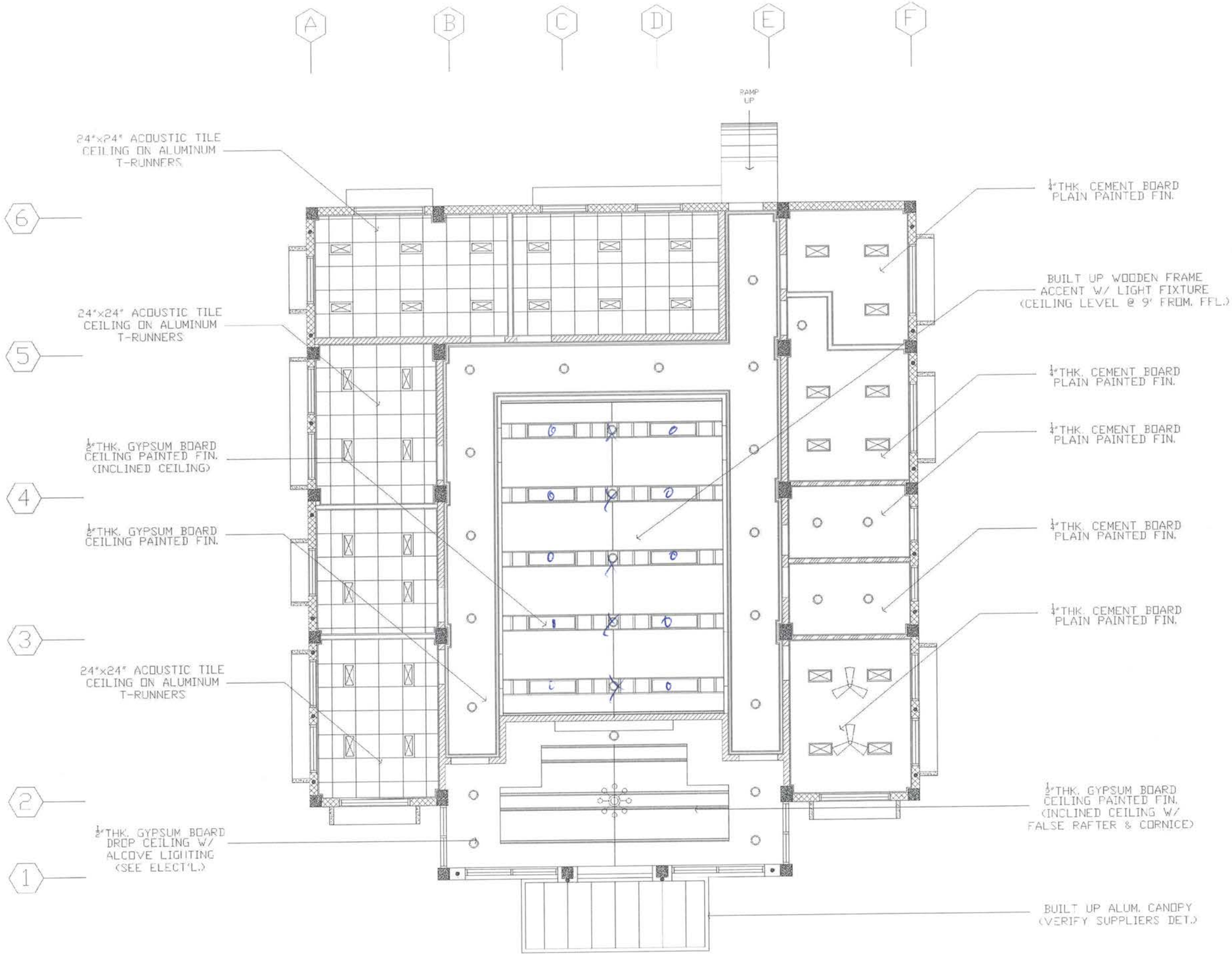

1 / A130 **REFLECTED CEILING PLAN**
SCALE 1' = 1/8"

E.O.C. Bldg.

R. S. ROQUE
ARCHITECTS
P.O. Box 6
Kolonia, POHNPEI
FSM 96941
Tel. (691) 320-2966
e-mail add.:
archrsroque@yahoo.com
ral_roque@yahoo.com

CONSULTANT

RYAN SALAS ROQUE
PRC NO. 002401
PHILIPPINES
REGISTERED ARCHITECT

Proposed F.S.M./Office of Environment and Emergency Management Bldg.

Palikir, Pohnpei

CONTENTS

REFLECTED CEILING PLAN

Approved

Approved

REVISION	BY

DATE: Feb., 2011

SCALE: AS SHOWN

DRAWN:

JOB:

SHEET

A-130

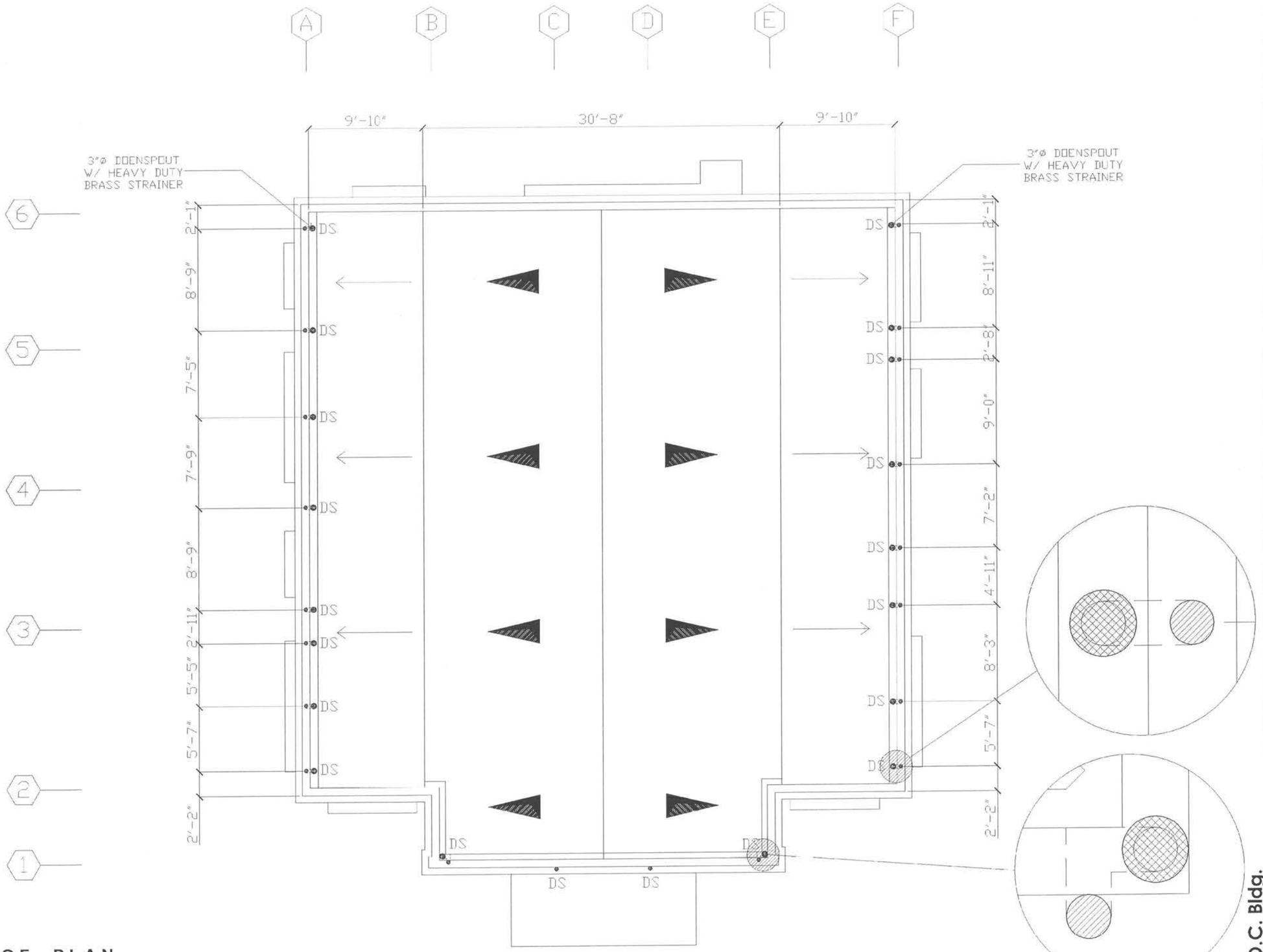

1 A140 **ROOF PLAN**
SCALE 1' = 1/8"

E.O.C. Bldg.

R. S. ROQUE
ARCHITECTS
P.O. Box 9
Kolonia, POHNPEI
FSM 96941
Tel. (691) 320-2966
email add.:
archrsroque@yahoo.com
rsl_roque@yahoo.com

CONSULTANT

RYAN SALAS ROQUE
PSC NO. 002403
PROFESSIONAL ENGINEER
PROFESSIONAL ARCHITECT

Proposed F.S.M./Office of Environment and Emergency Management Bldg.

Palikir, Pohnpei

CONTENTS
ROOF PLAN

Approved

Approved

REVISION	BY

DATE: Feb., 2011
SCALE: AS SHOWN
DRAWN:
JOB:
SHEET
A-140

1 A200 **FRONT ELEVATION**
SCALE 1" = 1/8"

2 A200 **LEFT SIDE ELEVATION**
SCALE 1" = 1/8"

R. S. ROQUE
ARCHITECTS
P.O. Box 6
Kolonia, POHNPEI
FSM 96941
Tel. (691) 320-2966
email add.:
archrsroque@yahoo.com
ral_roque@yahoo.com

CONSULTANT

RYAN SALAS ROQUE
PNC NO 00001
PREC. PP. XXX
REGISTERED ARCHITECT

Proposed F.S.M./Office of Environment and Emergency Management Bldg.

Palikir, Pohnpei

CONTENTS
ELEVATIONS

Approved

Approved

REVISION	BY

DATE: Feb., 2011
SCALE: AS SHOWN
DRAWN:
JOB:
SHEET
A-200

E.O.C. Bldg.

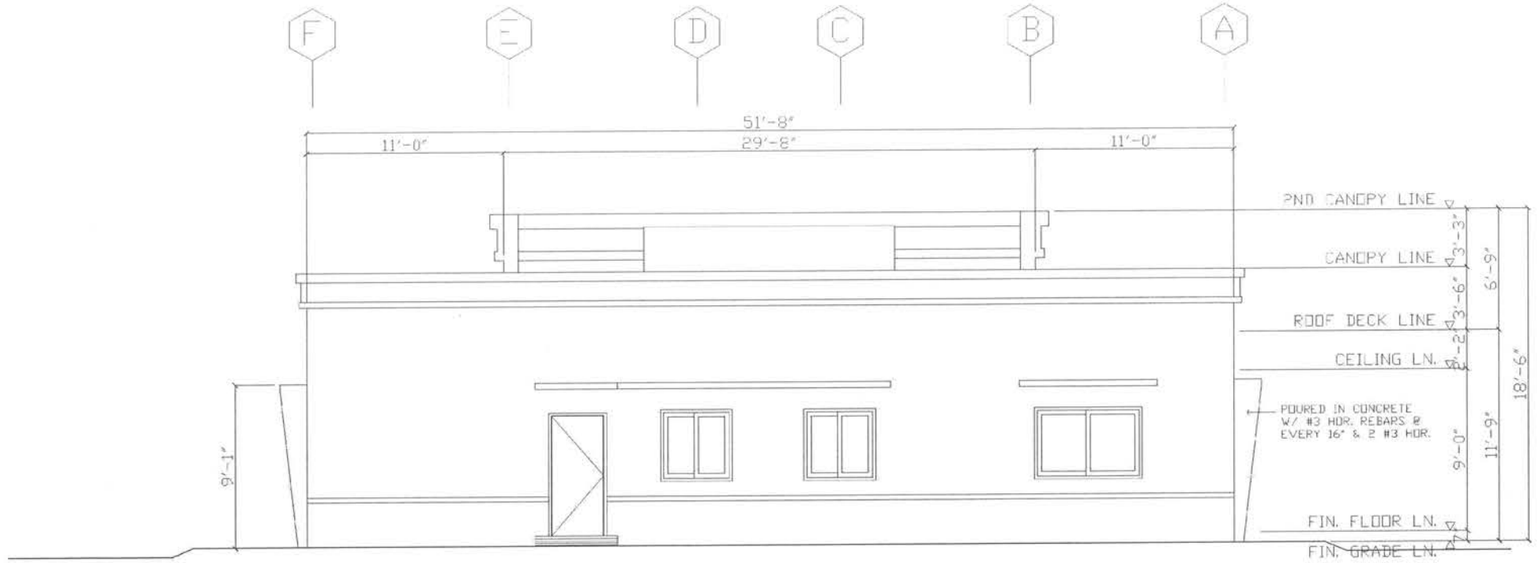

1 A201 **REAR ELEVATION**
SCALE 1' = 1/8"

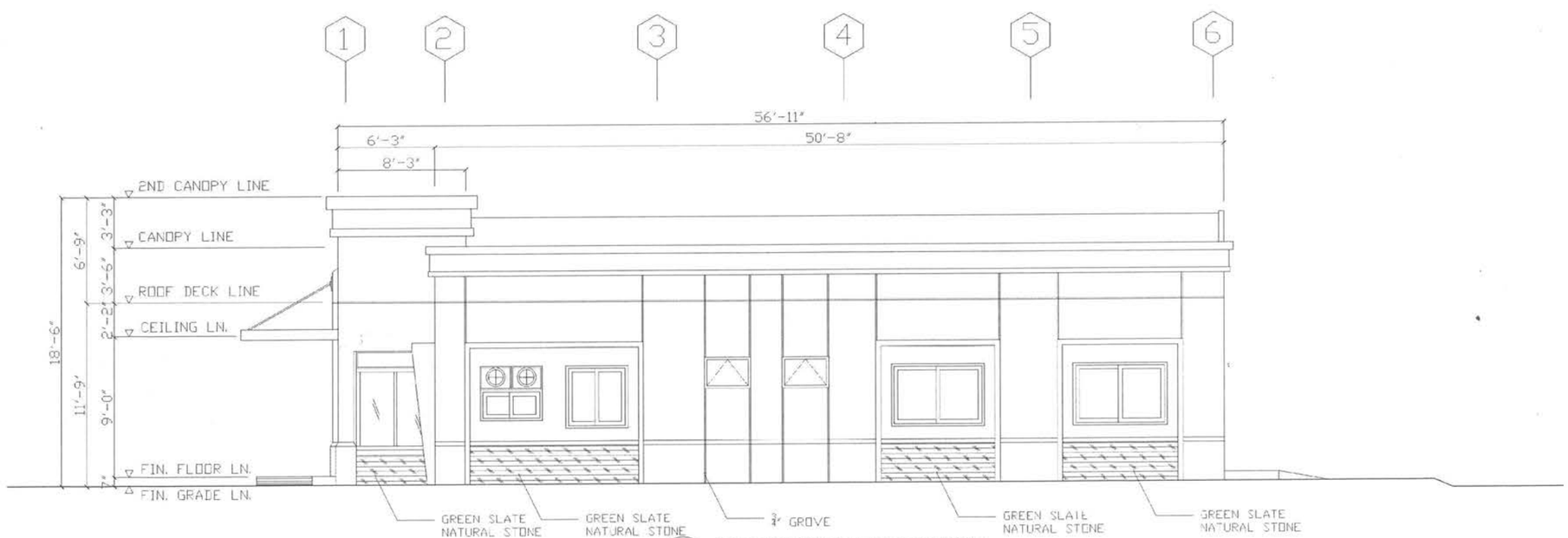

2 A201 **RIGHT SIDE ELEVATION**
SCALE 1' = 1/8"

R. S. ROQUE
ARCHITECTS
P.O. Box 6
Kolonia, POHNPEI
FSM 96941
Tel. (691) 320-2966
email add.:
archrsroque@yahoo.com
rai_roque@yahoo.com

CONSULTANT

RAN SALAS ROQUE
REGISTERED ARCHITECT
PHILIPPINES

Proposed F.S.M./Office of Environment and Emergency Management Bldg.

Palikir, Pohnpei

CONTENTS
ELEVATIONS

Approved

Approved

REVISION	BY

DATE: Feb., 2011
SCALE: AS SHOWN
DRAWN:
JOB:
SHEET
A-201

E.O.C. Bldg.

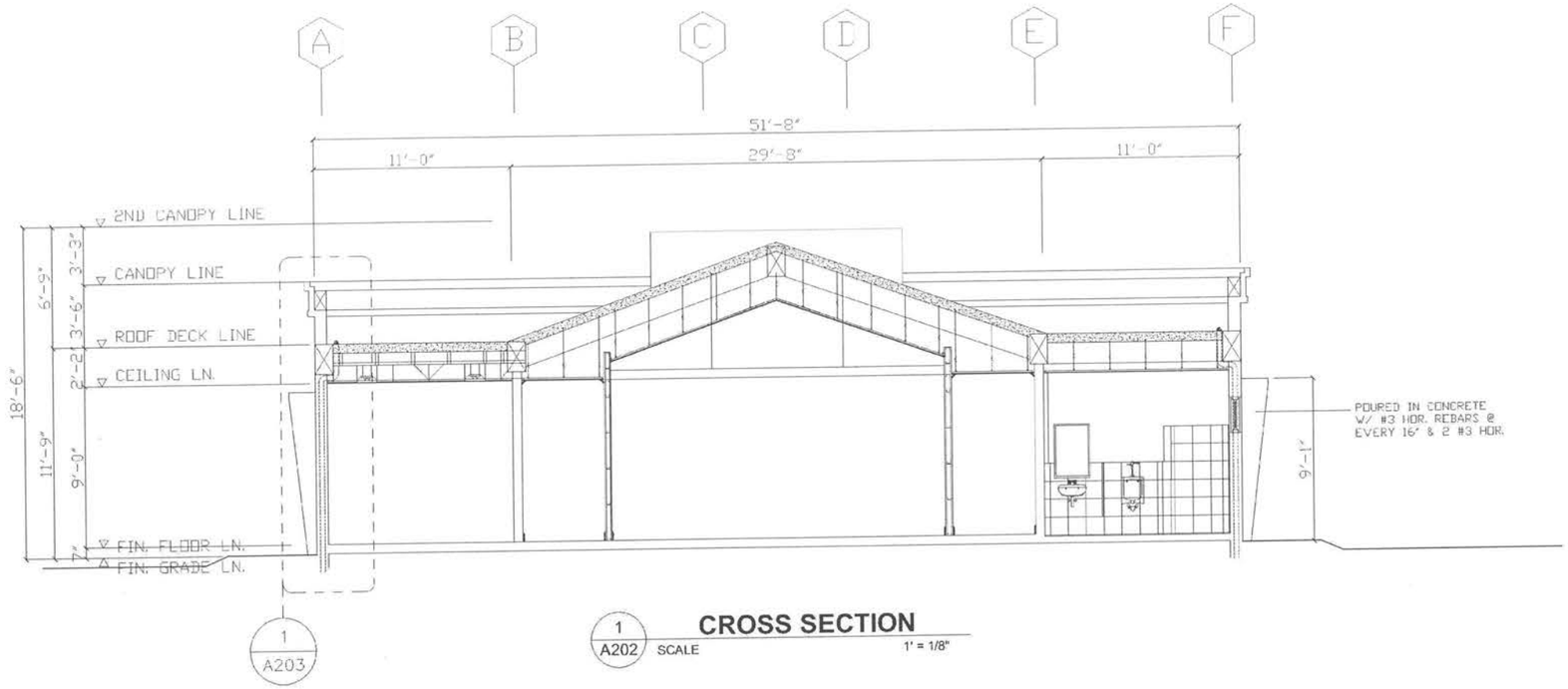

1 A202 **CROSS SECTION**
SCALE 1' = 1/8"

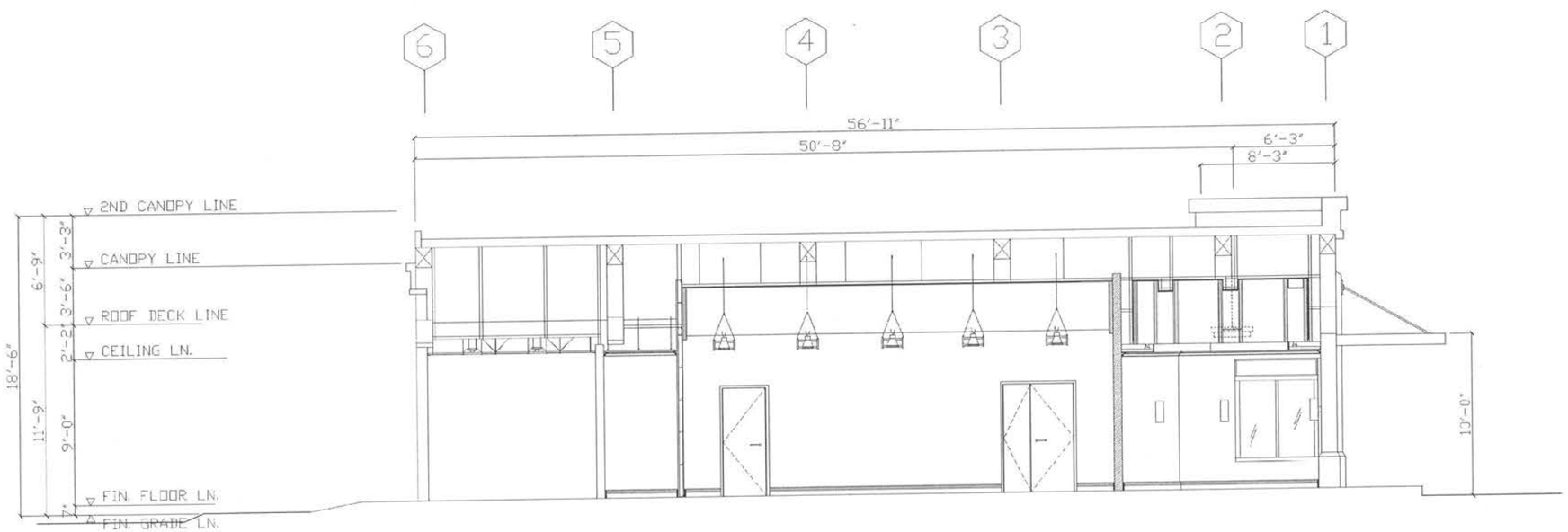

2 A202 **LONGITUDINALSECTION**
SCALE 1' = 1/8"

R. S. ROQUE
ARCHITECTS
P.O. Box 6
Kolonia, POHNPEI
FSM 96941
Tel. (691) 320-2966
email add.:
archrsroque@yahoo.com
rai_roque@yahoo.com
CONSULTANT
RYAN SALAS ROQUE
PHILIPPINES
REGISTERED ARCHITECT

Proposed F.S.M./Office of Environment and Emergency Management Bldg.

Palikir, Pohnpei

CONTENTS
SECTIONS

Approved

Approved

REVISION	BY

DATE: Feb., 2011
SCALE: AS SHOWN
DRAWN:
JOB:
SHEET
A-202

E.O.C. Bldg.

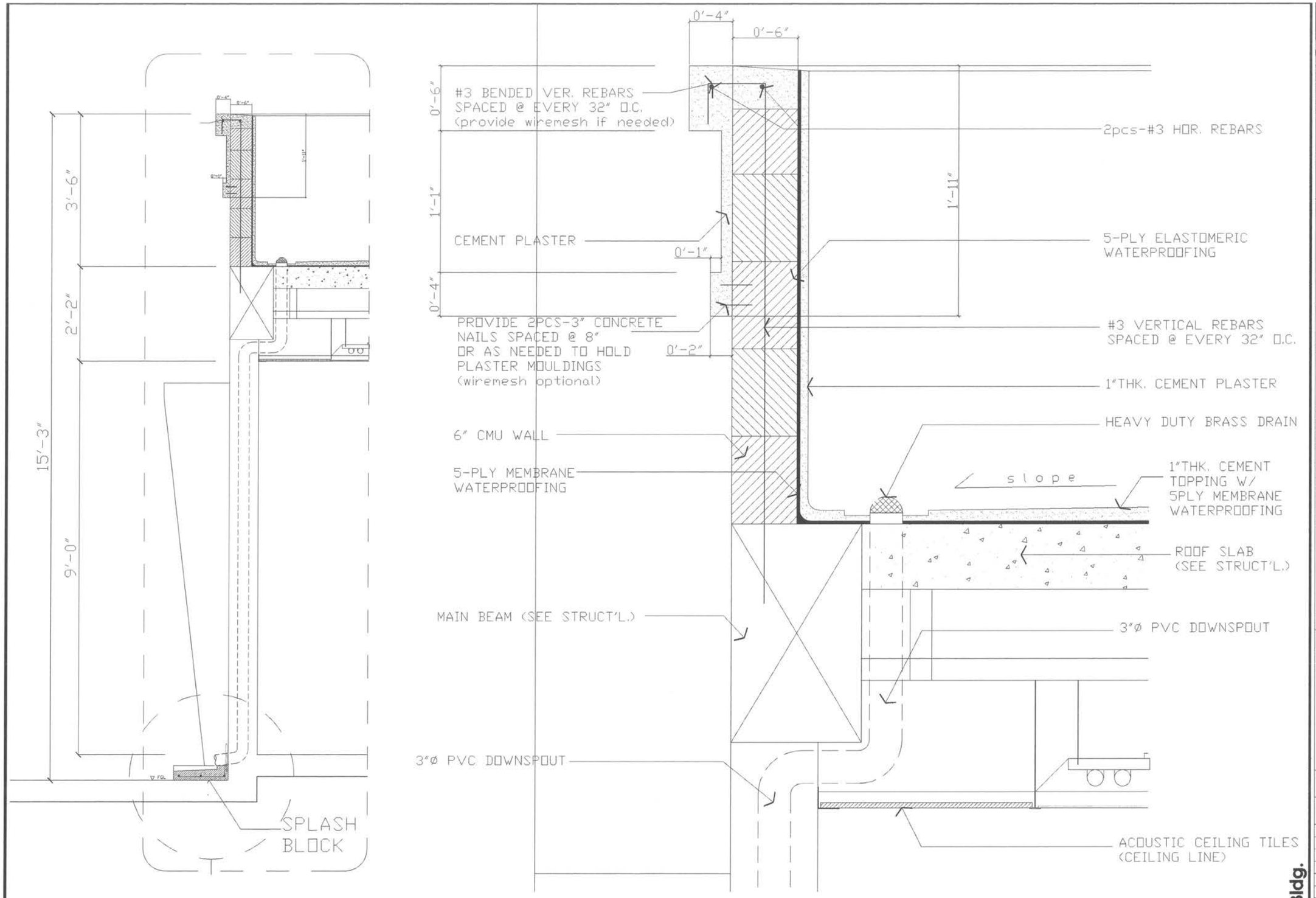

1 A203 **BAY SECTION** SCALE 1' = 1/2"

2 A203 **BLOW UP DETAIL OF PARAPET** SCALE 1' = 1-1/2"

E.O.C. Bldg.

R. S. ROQUE
ARCHITECTS
P.O. Box 6
Kolonia, POHNPEI
FSM 96941
Tel. (691) 320-2866
email add.:
srchrroque@yahoo.com
rsl_roque@yahoo.com

CONSULTANT

RYAN SALAS ROQUE
PRC NO. 0020035
THIS IMPRESSION
REGISTERED ARCHITECT

Proposed F.S.M./Office of Environment and Emergency Management Bldg.
Palikir, Pohnpei

CONTENTS
BAY SECTION
DETAIL

Approved

Approved

REVISION	BY

DATE: Feb., 2011
SCALE: AS SHOWN
DRAWN:
JOB:
SHEET
A-203

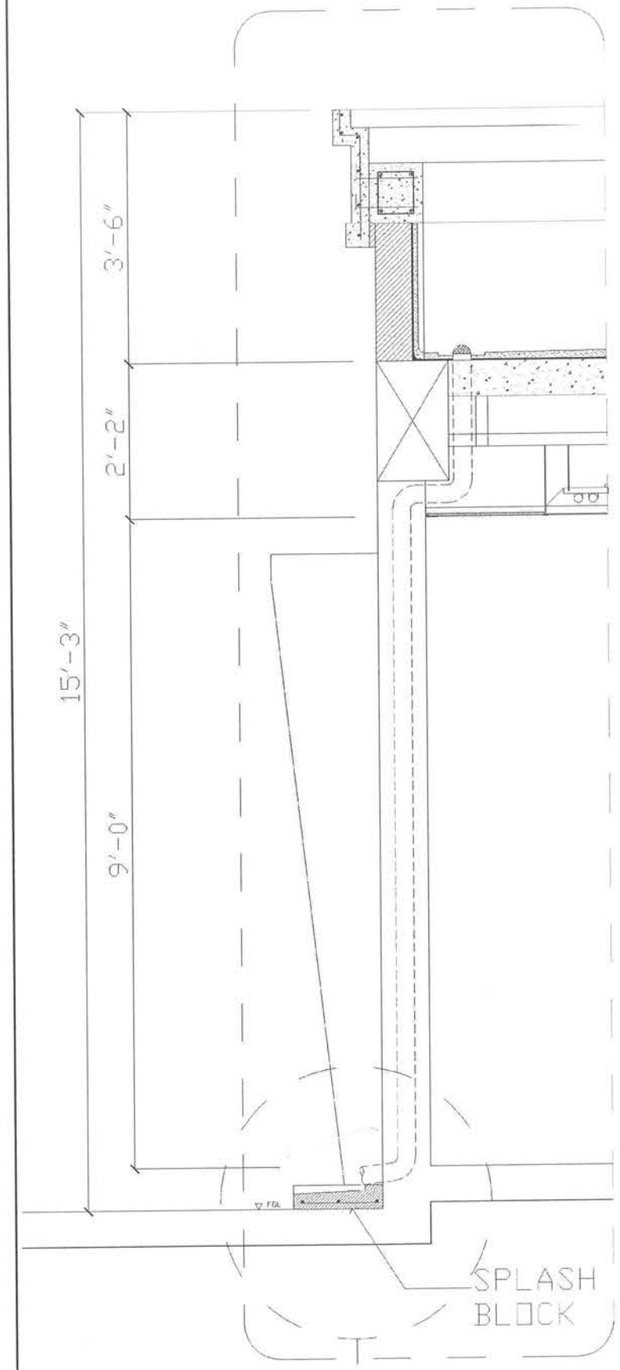

1 A203 **BAY SECTION**
SCALE 1' = 1/2"

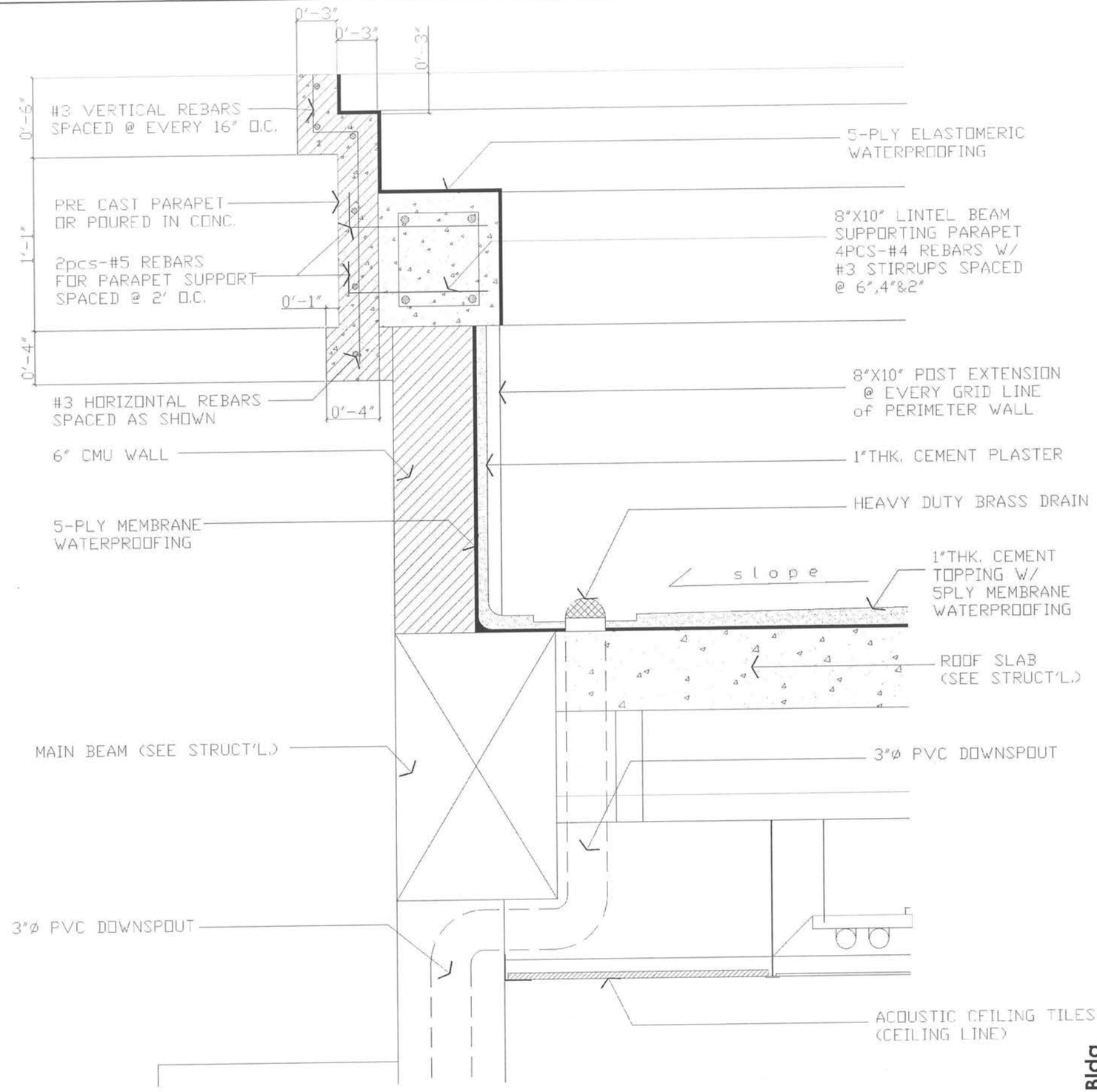

2 A203 **BLOW UP DETAIL OF PARAPET**
SCALE 1' = 1-1/2"

E.O.C. Bldg.

R. S. ROQUE
ARCHITECTS
P.O. Box 6
Kolonia, POHNPEI
FSM 96941
Tel. (691) 320-2966
email add.:
archrsroque@yahoo.com
rsi_roque@yahoo.com

CONSULTANT

RIAN SALAS ROQUE
FSM NO. 002401
REGISTERED ARCHITECT

Proposed F.S.M./Office of Environment and Emergency Management Bldg.

Palikir, Pohnpei

CONTENTS

BAY SECTION

DETAIL

Approved

Approved

REVISION	BY

DATE: Feb., 2011

SCALE: AS SHOWN

DRAWN:

JOB:

SHEET

A-203

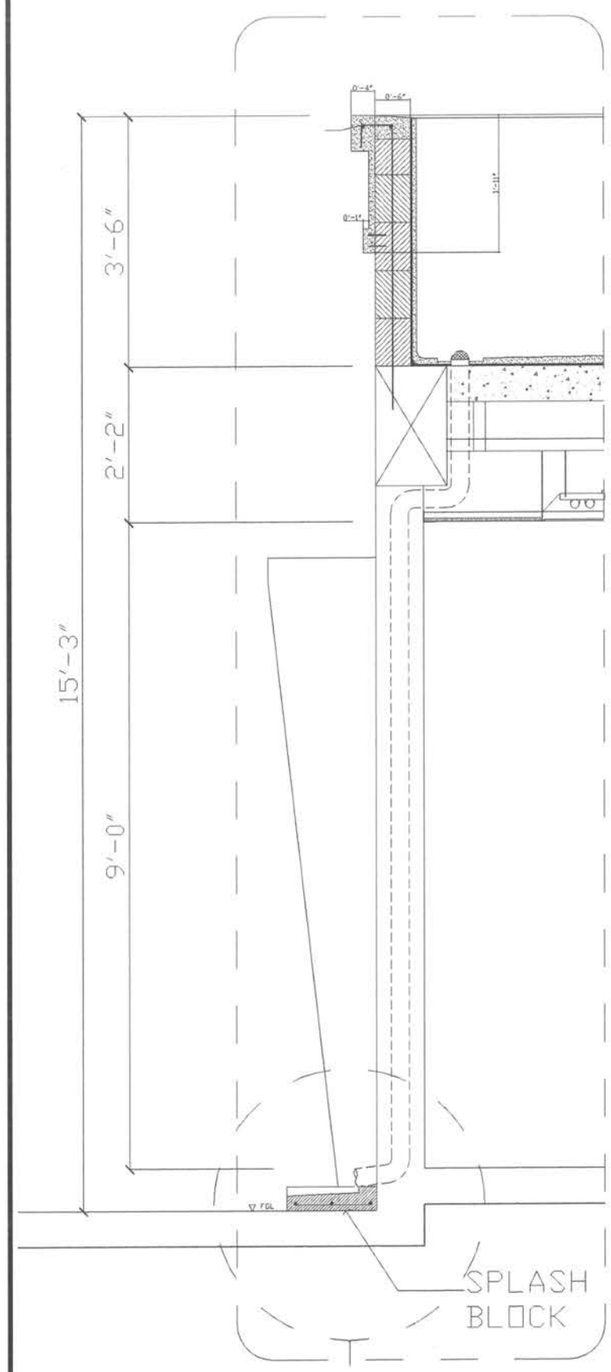

1 A203 **BAY SECTION**
SCALE 1' = 1/2"

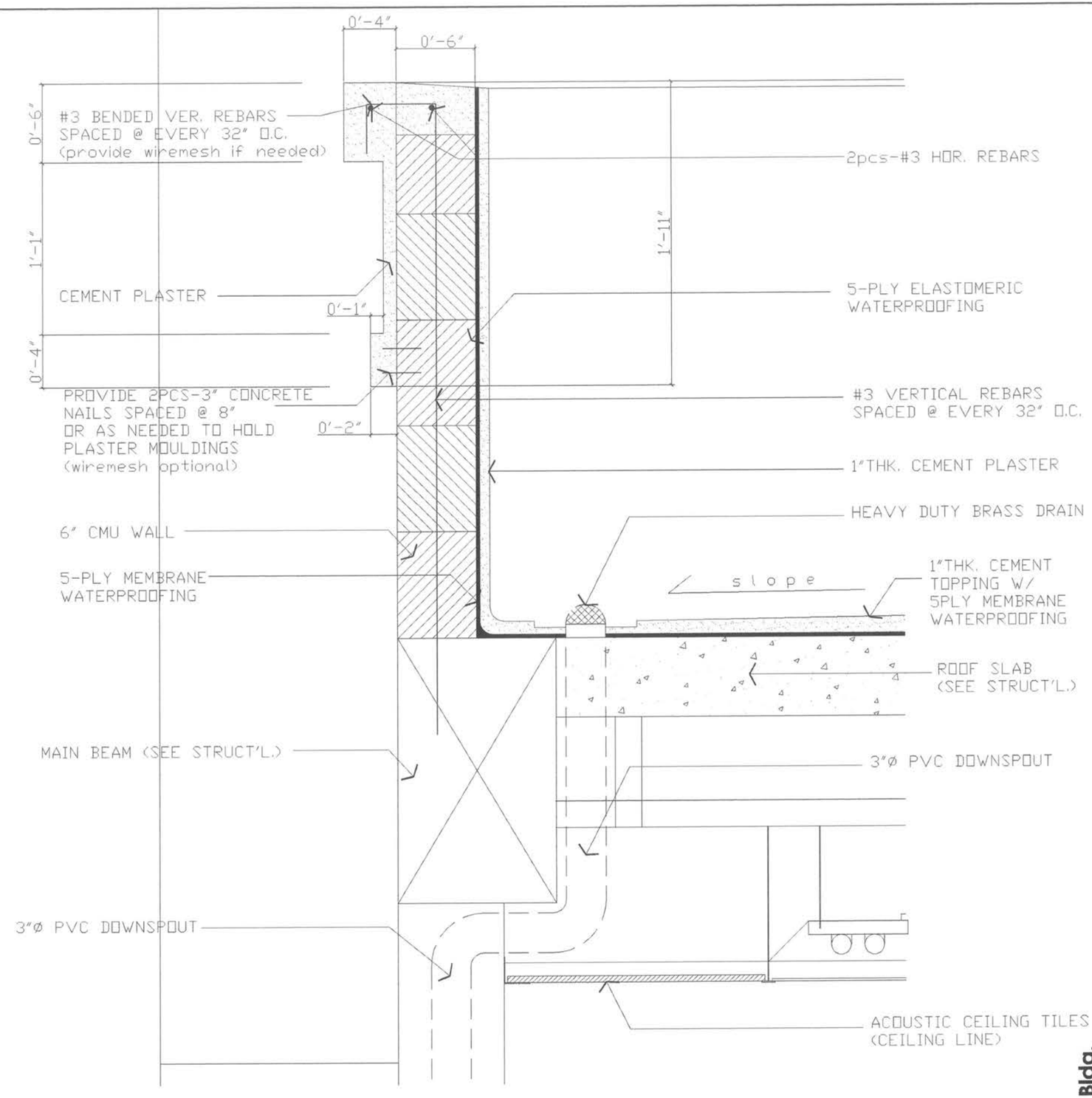

2 A203 **BLOW UP DETAIL OF PARAPET**
SCALE 1' = 1-1/2"

R. S. ROQUE
ARCHITECTS
P.O. Box 6
Kolonia, POHNPEI
FSM 96941
Tel. (691) 320-2966
email add.:
archrsroque@yahoo.com
rsi_roque@yahoo.com
CONSULTANT
RYAN SALAS ROQUE
REGISTERED ARCHITECT

Proposed F.S.M./Office of Environment and Emergency Management Bldg.
Palikir, Pohnpei

CONTENTS
BAY SECTION
DETAIL

Approved
Approved

REVISION	BY

DATE: Feb., 2011
SCALE: AS SHOWN
DRAWN:
JOB:
SHEET
A-203

E.O.C. Bldg.

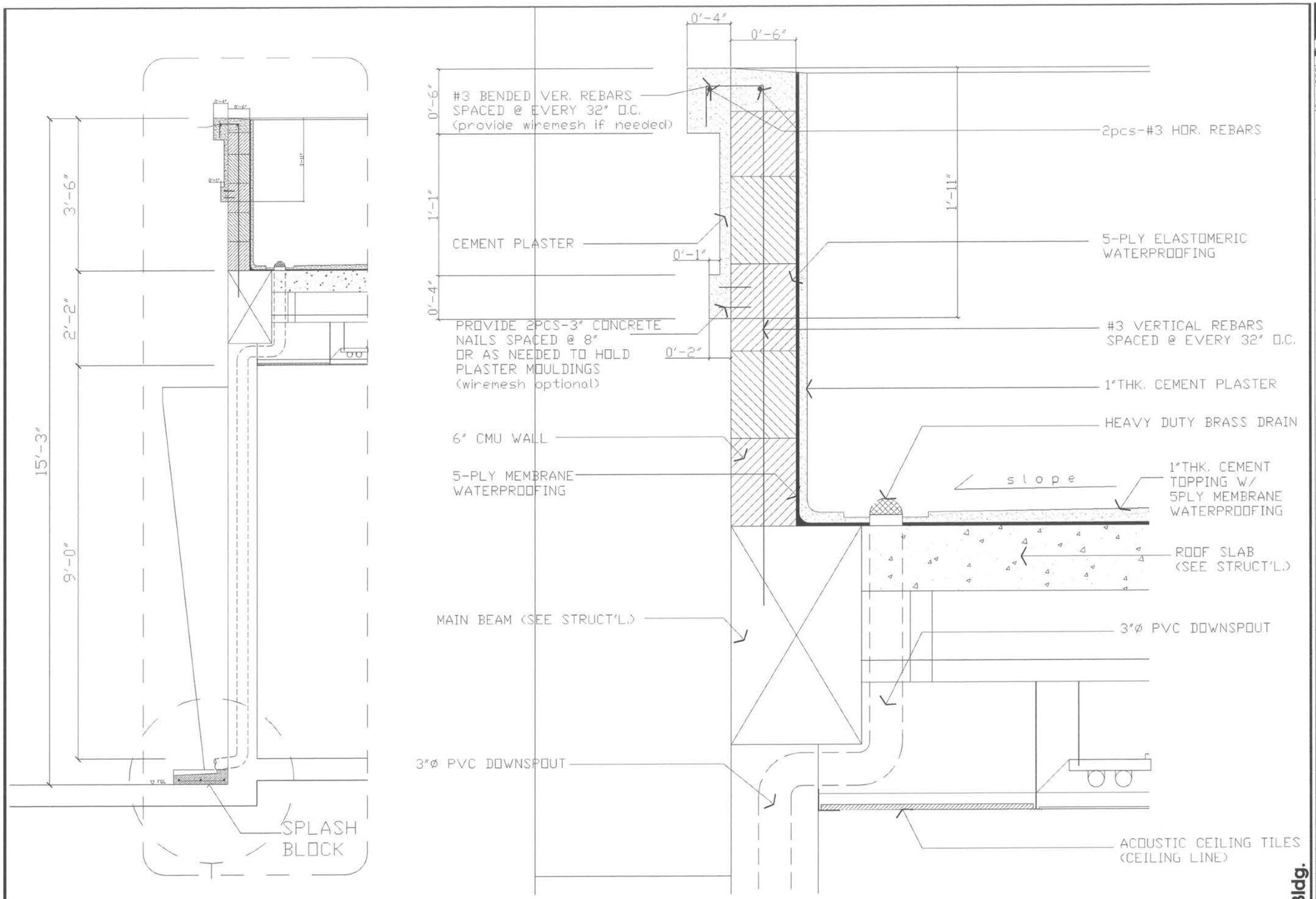

1 A203 **BAY SECTION** SCALE 1' = 1/2"

2 A203 **BLOW UP DETAIL OF PARAPET** SCALE 1' = 1-1/2"

E.O.C. Bldg.

R. S. ROQUE
ARCHITECTS
P.O. Box 6
Kolonia, POHNPEI
FSM 96941
Tel. (691) 320-2966
email add.:
srchrroque@yahoo.com
rsi_roque@yahoo.com

CONSULTANT

RYAN SALAS ROQUE
PRC NO. 0020015
PHILIPPINES
REGISTERED ARCHITECT

Proposed F.S.M./Office of Environment and Emergency Management Bldg.

Palikir, Pohnpei

CONTENTS

BAY SECTION

DETAIL

Approved

Approved

REVISION	BY

DATE: Feb., 2011

SCALE: AS SHOWN

DRAWN:

JOB:

SHEET

A-203

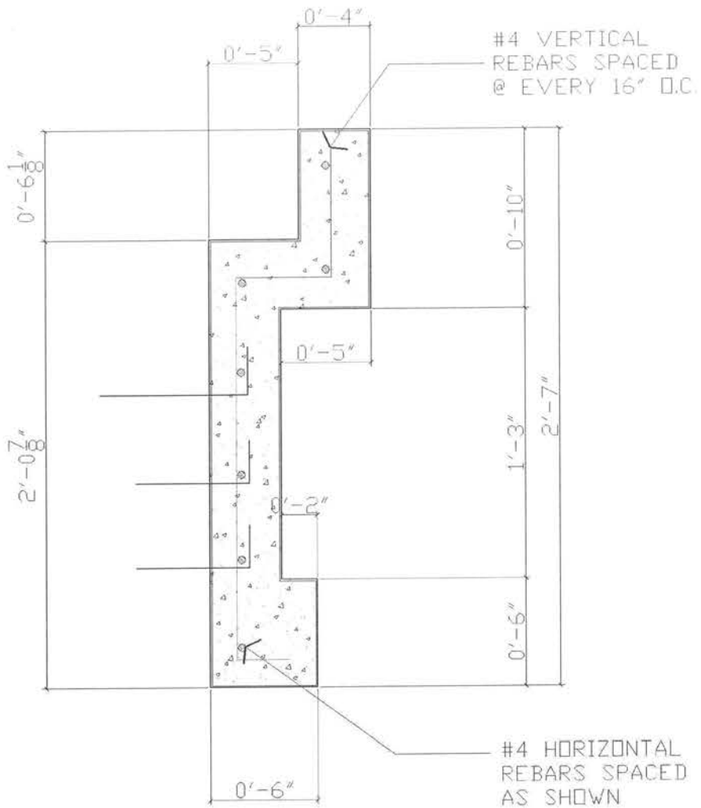

1 / A204 **PARAPET PROFILE 1**
SCALE 1' = 1-1/2"

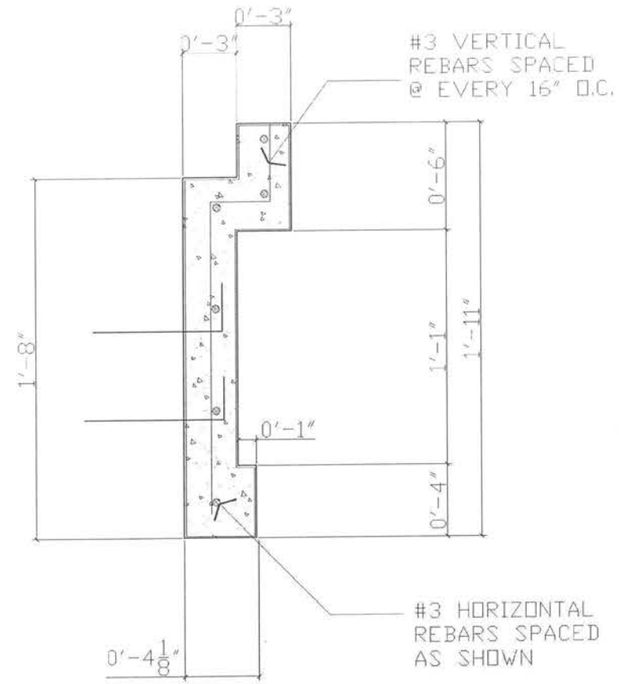

2 / A204 **PARAPET PROFILE 2**
SCALE 1' = 1-1/2"

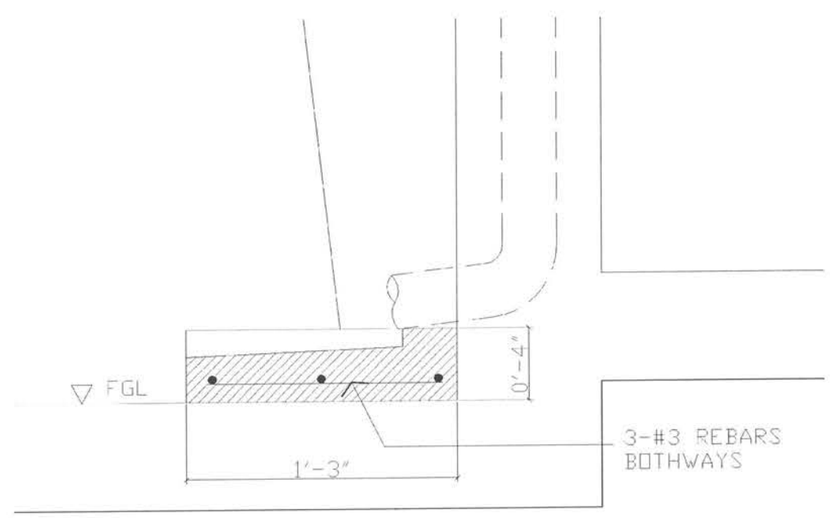

3 / A204 **SECTION OF SPLASH BLOCK**
SCALE 1' - 1-1/2"

R. S. ROQUE
ARCHITECTS
P.O. Box 6
Kolonia, POHNPEI
FSM 96941
Tel. (691) 320-2966
email add.:
archrsroque@yahoo.com
ral_roque@yahoo.com

CONSULTANT

RYAN SALAS ROQUE
PSC NO. 002401

Proposed F.S.M./Office of Environment and Emergency Management Bldg.

Palikir, Pohnpei

CONTENTS

SECTION

DETAIL

Approved

Approved

REVISION	BY

DATE: Feb., 2011

SCALE: AS SHOWN

DRAWN:

JOB:

SHEET

A-204

E.O.C. Bldg.

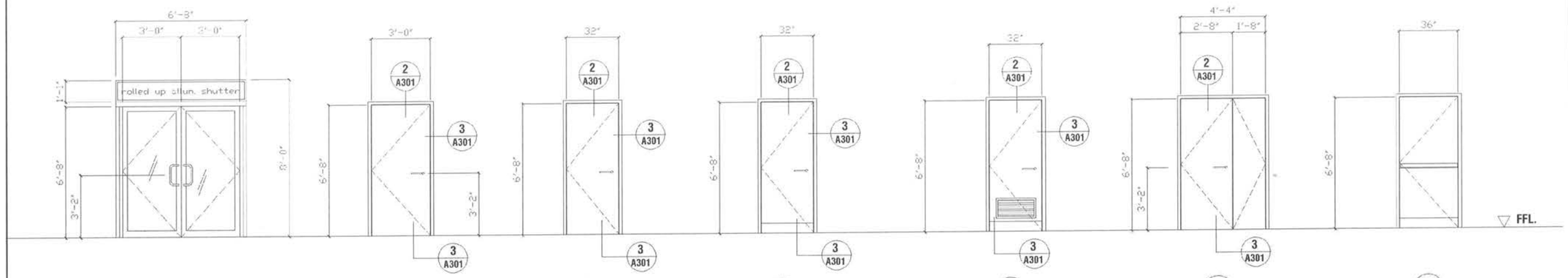

D1

ALUMINUM GLASS DOOR DOUBLE LEAF WITH ROLLED UP DOOR ON TOP
(1 pc.)

D2

SOLID WOOD FLUSH DOOR WOOD JAMB (HARDWOOD)
(2 pcs.)

D3

HOLLOW CORE FLUSH DOOR WOOD JAMB (HARDWOOD)
(10 pcs.)

D4

SOLID WOOD FLUSH DOOR W/ $\frac{1}{8}$"THK.x6" ALUM. KICK PLATE WOOD JAMB (HARDWOOD)
(1 pcs.)

D5

HOLLOW CORE WOOD FLUSH DOOR (WITH WOOD LOUVERS ON BOTTOM & $\frac{1}{8}$"THK.x6" ALUM. KICK PLATE)
(2 pcs.)

D6

SOLID WOOD FLUSH DOOR WOOD JAMB (HARDWOOD)
(1 pc.)

D7

EMERGENCY EXIT PANIC DOOR ACCESS ON 1 SIDE ONLY
(1 pcs.)

1 / A300 **SCHEDULE OF DOORS**
SCALE 1' = 3/16"

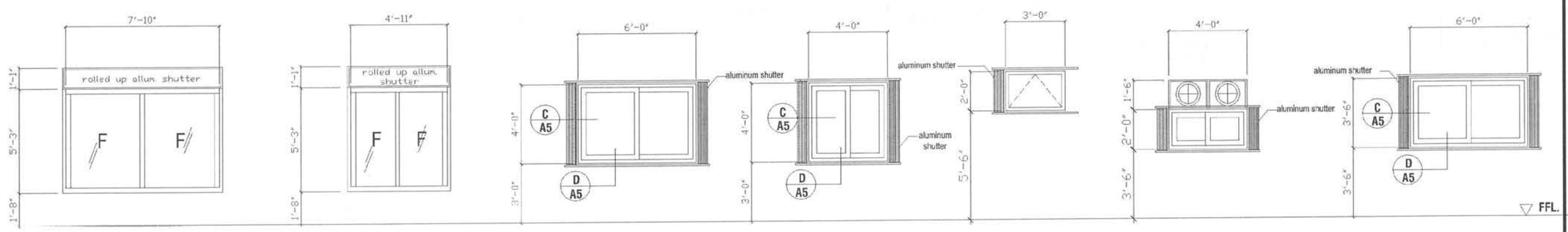

W 1

$\frac{1}{4}$"THK. LAMINATED GLASS FIXED WINDOW ALUMINUM SECTION W/ ROLLED UP ALUM. SHUTTER ON TOP
(2 pcs.)

W 2

$\frac{1}{4}$"THK. LAMINATED GLASS FIXED WINDOW ALUMINUM SECTION W/ ROLLED UP ALUM. SHUTTER ON TOP
(2 pcs.)

W 3

SLIDING GLASS WINDOW ALUMINUM SECTION PROVIDE ALUMINUM SHUTTER
(3 pcs.)

W 4

SLIDING GLASS WINDOW ALUMINUM SECTION PROVIDE ALUMINUM SHUTTER
(9 pcs.)

W 5

AWNING WINDOW, ALUMINUM SECTION
(2 pcs.)

W 6

SLIDING GLASS WINDOW ALUMINUM SECTION W/ 2PCS. EXHAUST FAN ON TOP PROVIDE ALUMINUM SHUTTER
(1 pc.)

W 7

SLIDING GLASS WINDOW ALUMINUM SECTION PROVIDE ALUMINUM SHUTTER
(2 pcs.)

2 / A300 **SCHEDULE OF WINDOWS**
SCALE 1' = 3/16"

E.O.C. Bldg.

R. S. ROQUE
ARCHITECTS
P.O. Box 6
Kolonia, POHNPEI
FSM 96941
Tel. (691) 320-2966
email add.:
archrsroque@yahoo.com
rai_roque@yahoo.com

CONSULTANT

RAI SALAS ROQUE
PHILIPPINES
REGISTERED ARCHITECT

Proposed F.S.M./Office of Environment and Emergency Management Bldg.

Palikir, Pohnpei

CONTENTS
SCHEDULES

Approved

Approved

REVISION	BY

DATE: Feb., 2011
SCALE: AS SHOWN
DRAWN:
JOB:
SHEET
A-300

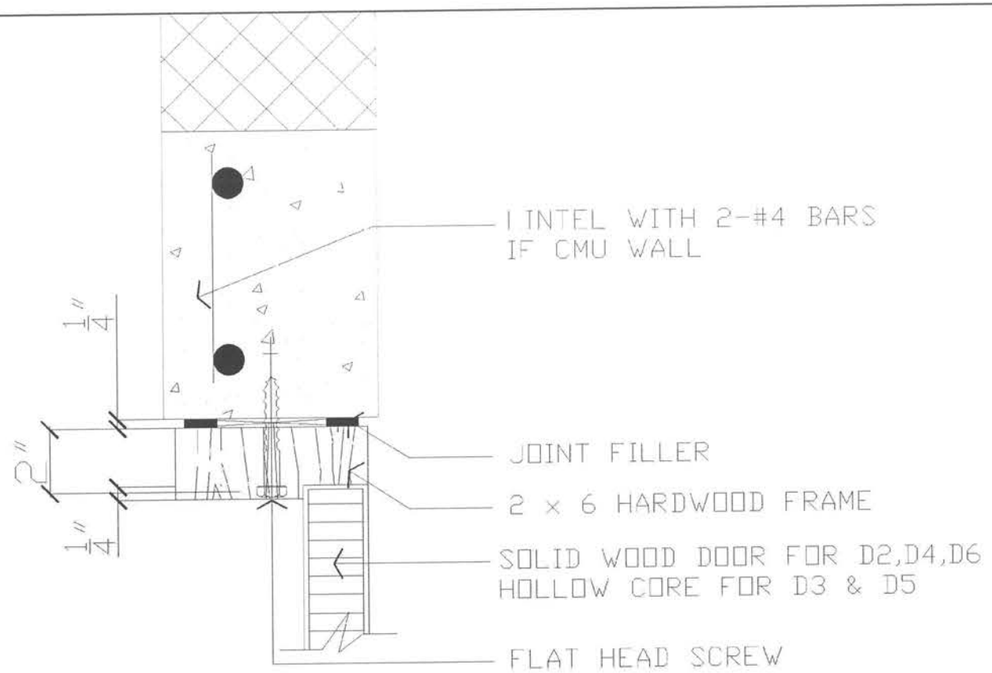

2 A301 **DETAIL** SCALE 1' = 3"

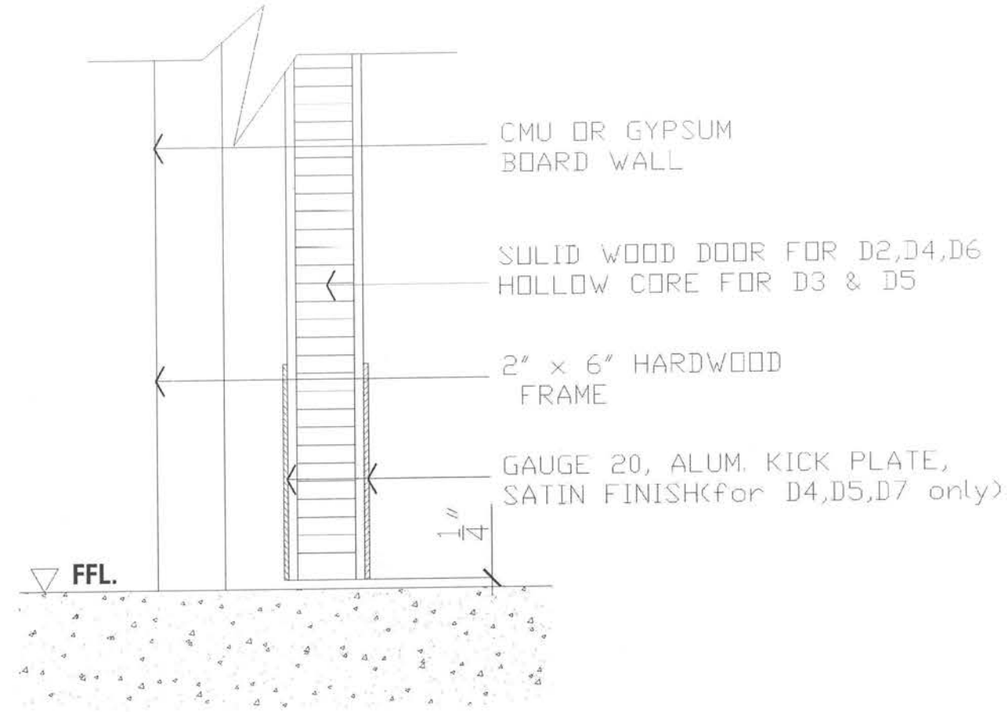

4 A301 **DETAIL** SCALE 1' = 3"

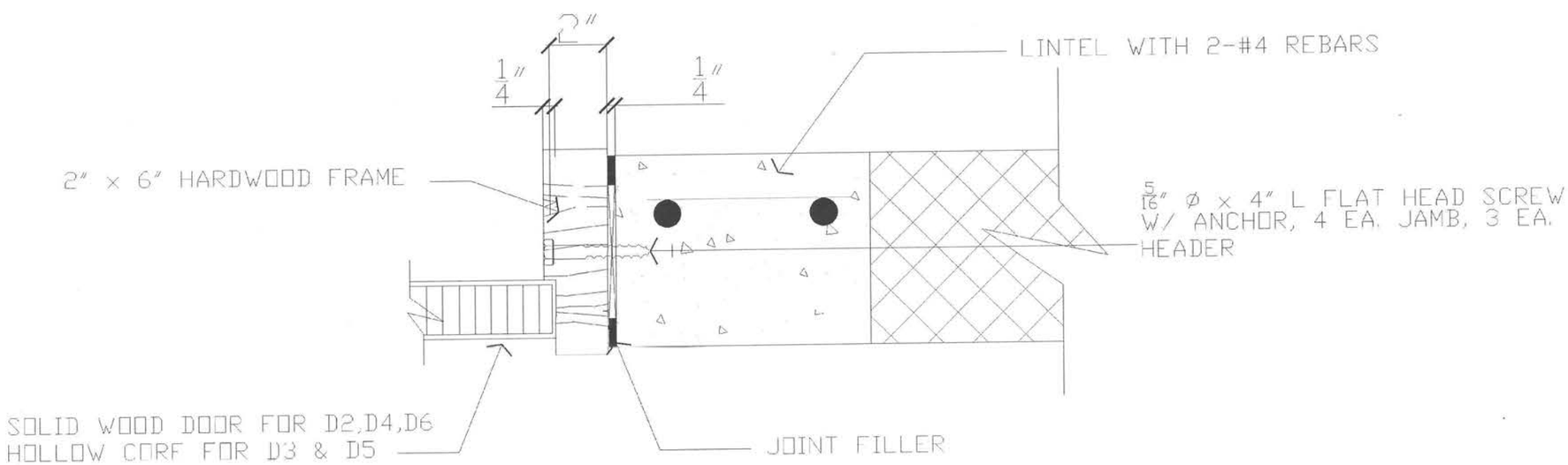

3 A301 **DETAIL** SCALE 1' = 3"

1 A301 **TYPICAL DETAIL OF WOOD DOOR** SCALE 1' = 3"

R. S. ROQUE
ARCHITECTS
P.O. Box 5
Kolonia, POHNPEI
FSM 96941
Tel. (691) 320-2966
email add.:
archrsroque@yahoo.com
rai_roque@yahoo.com
CONSULTANT
RYAN SALAS ROQUE
REGISTERED ARCHITECT

Proposed F.S.M./Office of Environment and Emergency Management Bldg.
Palikir, Pohnpei

CONTENTS
DOOR DET.

Approved

Approved

REVISION	BY

DATE: Feb., 2011
SCALE: AS SHOWN
DRAWN:
JOB:
SHEET
A-301

E.O.C. Bldg.

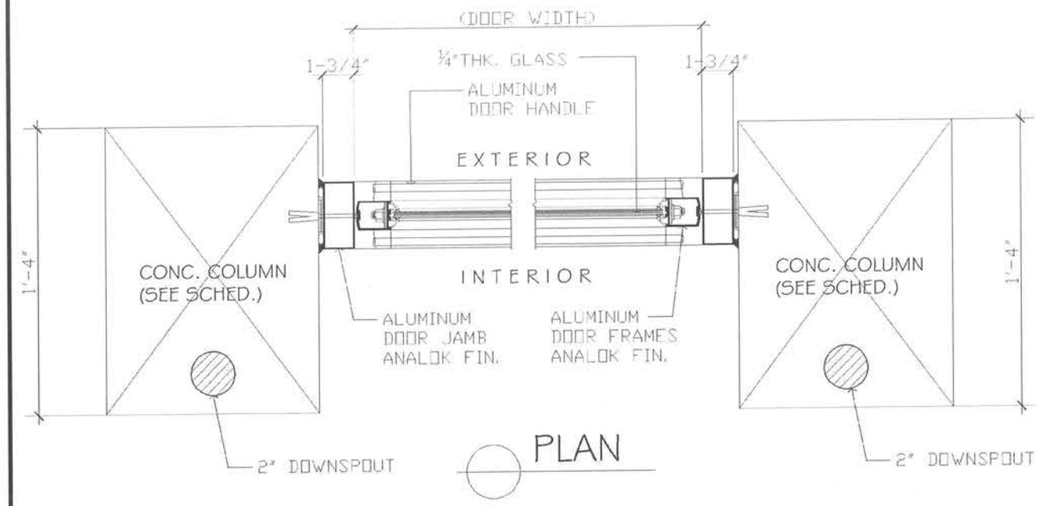

PLAN

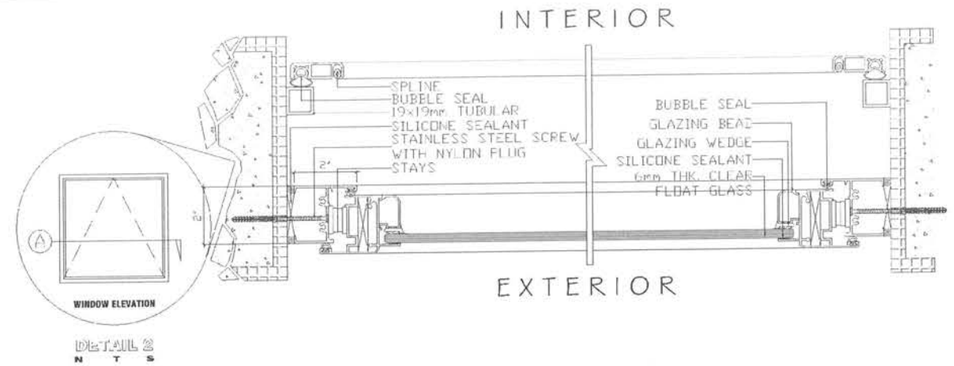

DETAIL 2
N T S

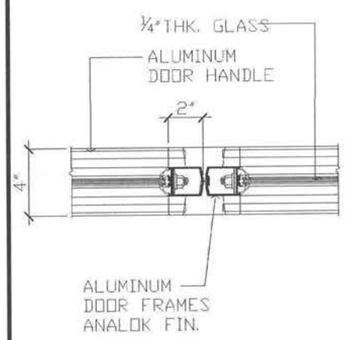

SECTION

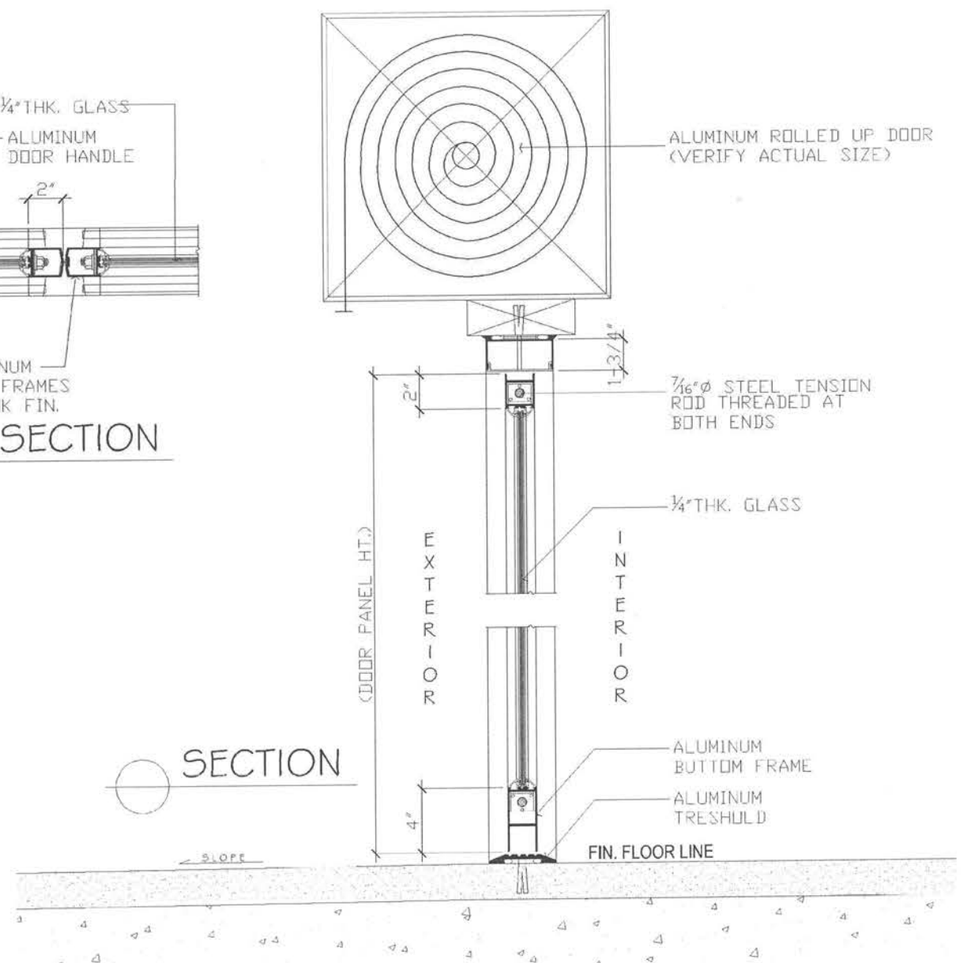

SECTION

1 A302 **DETAIL OF D1 DOUBLE SWING**
SCALE 1' = 1-1/2"

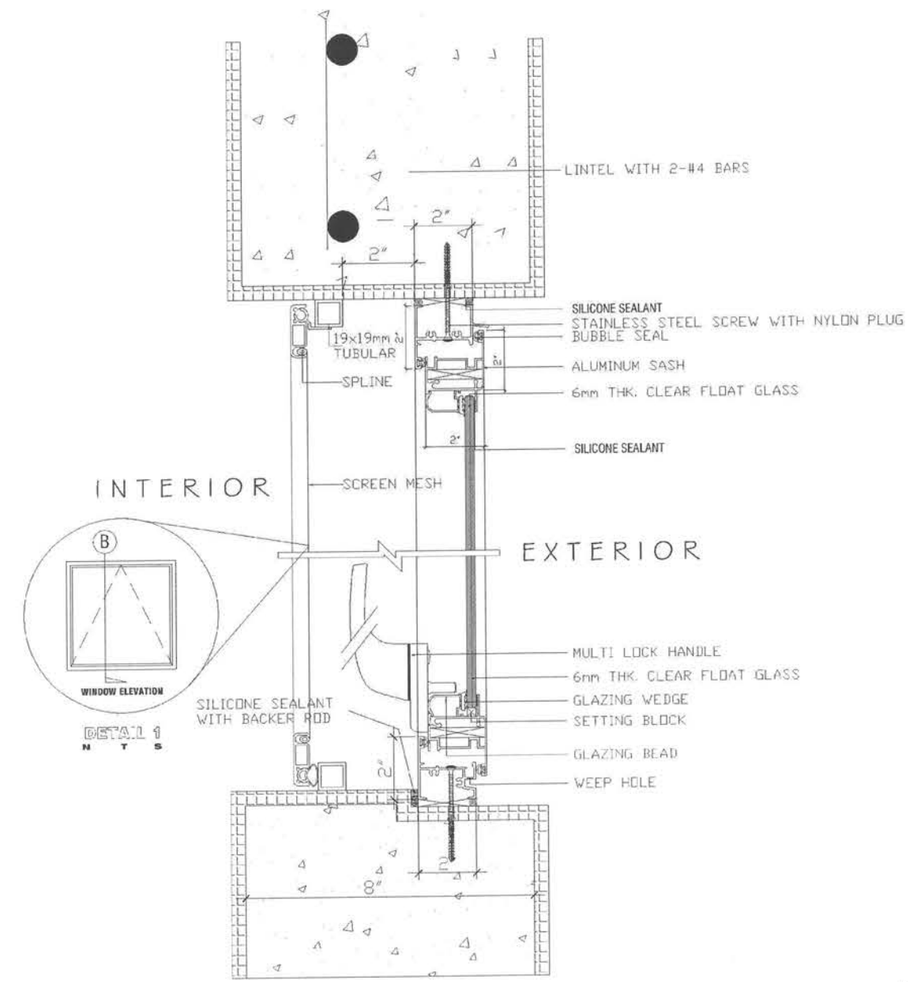

DETAIL 1
N T S

2 A302 **AWNING WINDOW DETAIL**
SCALE 1' = 3"

R. S. ROQUE
ARCHITECTS
P.O. Box 6
Kolonia, POHNPEI
FSM 96941
Tel. (691) 320-2966
email add.:
archrsroque@yahoo.com
rsl_roque@yahoo.com
CONSULTANT
RYAN SALAS ROQUE
PHILIPPINES
REGISTERED ARCHITECT

Proposed F.S.M./Office of Environment and Emergency Management Bldg.

Palikir, Pohnpei

CONTENTS

D1 DETAIL

DETAILS

Approved

Approved

REVISION	BY

DATE: Feb., 2011

SCALE: AS SHOWN

DRAWN:

JOB:

SHEET

A-302

E.O.C. Bldg.

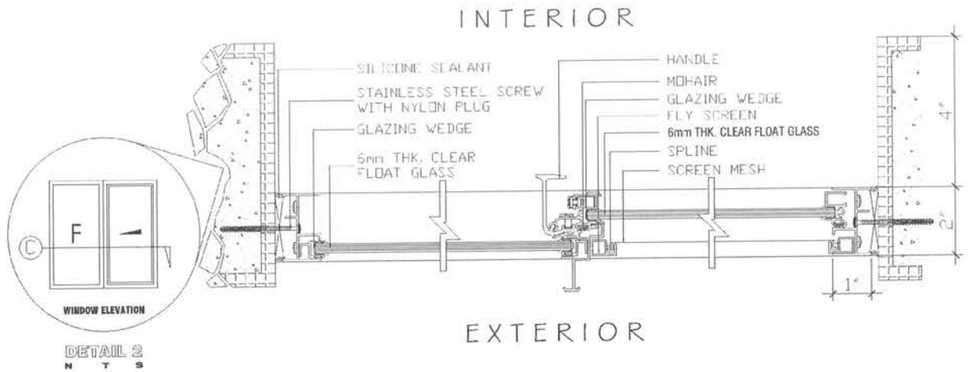

DETAIL 2
N T S

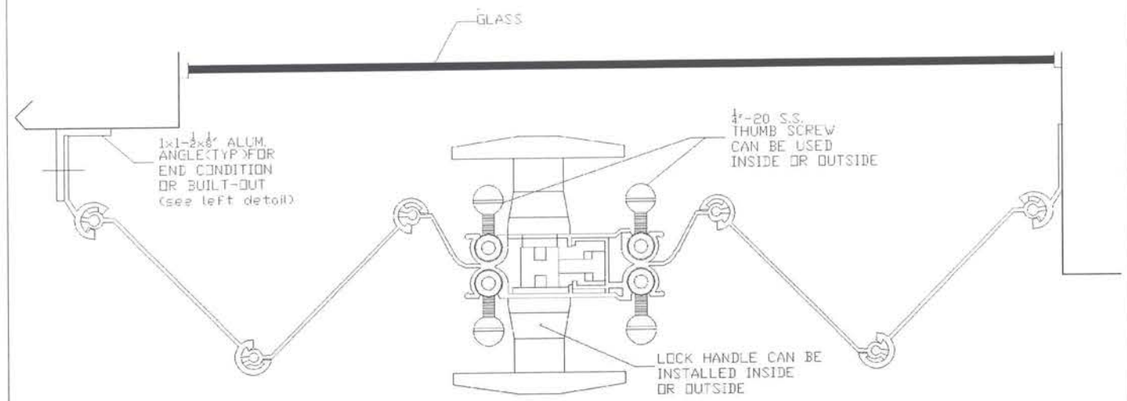

2 / A303 **PLAN**
ALUMINUM TYPHOON SHUTTER
SCALE NTS

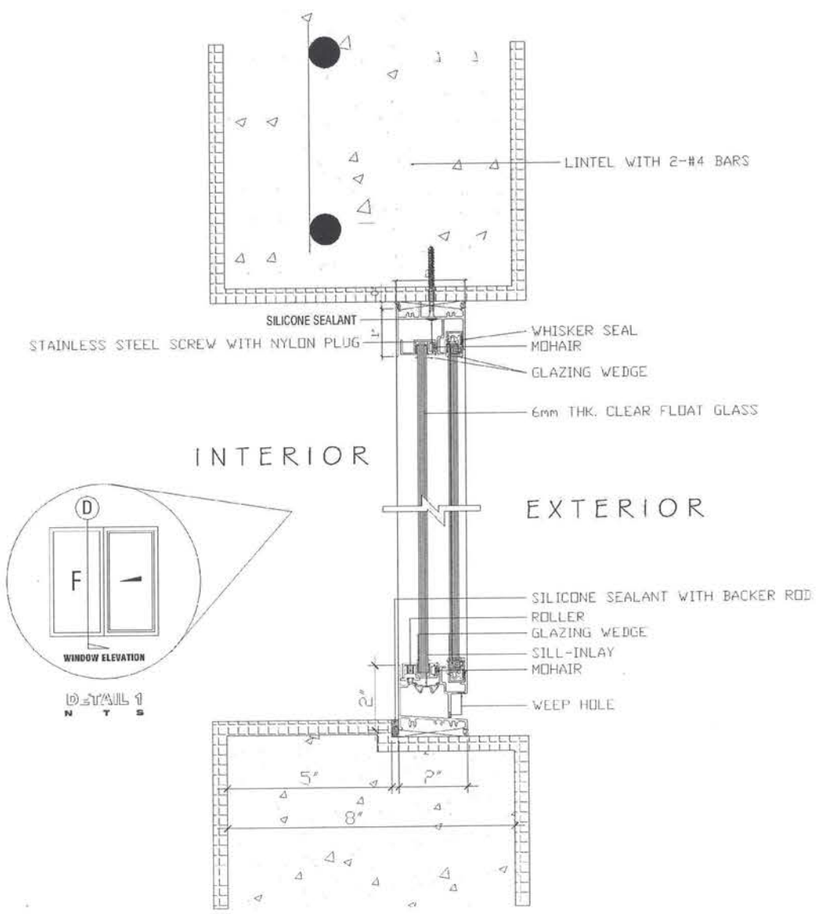

DETAIL 1
N T S

2 / A303 **ALUMINUM SLIDING WINDOW DET.**
SCALE 1' = 3"

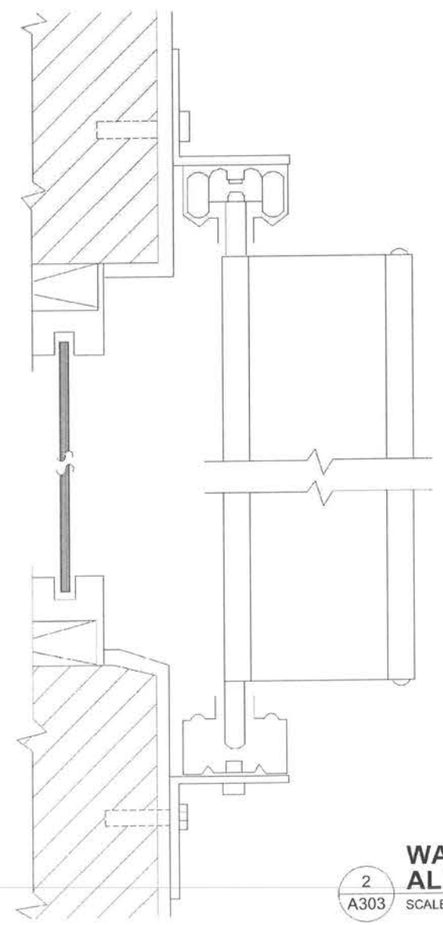

2 / A303 **WALL SECTION**
ALUMINUM TYPHOON SHUTTER
SCALE NTS

E.O.C. Bldg.

R. S. ROQUE
ARCHITECTS
P.O. Box 6
Kolonia, POHNPEI
FSM 96941
Tel. (691) 320-2966
email add.:
archrsroque@yahoo.com
rai_roque@yahoo.com
CONSULTANT
RAN SALAS ROQUE
PHILIPPINES
REGISTERED ARCHITECT

Proposed F.S.M./Office of Environment and Emergency Management Bldg.
Palikir, Pohnpei

CONTENTS
WINDOW DET.

Approved

Approved

REVISION	BY

DATE: Feb., 2011
SCALE: AS SHOWN
DRAWN:
JOB:
SHEET
A-303

ROOM NO.	FINISHES / ROOM NAME	FLOOR						WALL				CEILING						BASE				
		Vinyl Tiles	Plain Cement Smooth Finish	Non -skid Paint	Non-skid Ceramic tiles	24"x24" Ceramic tiles	$\frac{1}{8}$Ø black pebble washout	Cement Plaster Painted Finish	Cement Board Painted Finish	$\frac{3}{4}$"thk. Gypsum Board	Ceramic tiles	Gypsum Board Painted Finish	Concrete Painted Finish	Ordinary Ply Painted Finish	Cement board plain painted fin.	2'x2'x$\frac{1}{2}$"thk. Acoustic tile on alum. T-runners	1"x4" wooden Cornice design	Painted Finish	Vinyl Cove Base	1 Tile up	ceramic tiles	1"x4" Wooden Baseboard
EOC-100	DIRECTORS OFFICE	●						●		●						●			●			
EOC-101	PLANNING OFFICE	●						●		●						●			●			
EOC-102	HAZARD MITIGATION/ FINANCE ROOM	●						●		●						●			●			
EOC-103	COMMUNICATION ROOM	●						●		●						●			●			
EOC-104	PUBLIC ASSITANT	●						●		●						●			●			
EOC-105	CONFERENCE ROOM					●	●			●		●	see design & detail									●
EOC-106	HALLWAY					●	●			●		●					●					●
EOC-107	RECEPTION					●		●				●	see design & detail				●					●
EOC-108	LOUNGE					●		●				●	see design & detail				●					●
EOC-109	ENTRANCE						●															
EOC-110	KITCHEN & DINING				●			●							●					●		
EOC-111	FEMALE TOILET				●			●			●				●							
EOC-112	MALE TOILET				●			●			●				●							
EOC-113	SLEEPING QUARTERS	●						●		●					●			●				
EOC-114	STORAGE	●						●		●					●			●				

1 / A400 SCALE

SCHEDULE OF FINISHES

NTS

R. S. ROQUE
ARCHITECTS
P.O. Box 6
Kolonia, POHNPEI
FSM 96941
Tel.:(691) 320-2966
email add.:
archrsroque@yahoo.com
rsl_roque@yahoo.com
CONSULTANT
RUAN SALAS ROQUE
REGISTERED ARCHITECT

Proposed F.S.M./Office of Environment and Emergency Management Bldg.

Palikir, Pohnpei

E.O.C. Bldg.

CONTENTS

SCHEDULE OF FINISHES

Approved

Approved

REVISION	BY

DATE: Feb., 2011

SCALE: AS SHOWN

DRAWN:

JOB:

SHEET

A-400

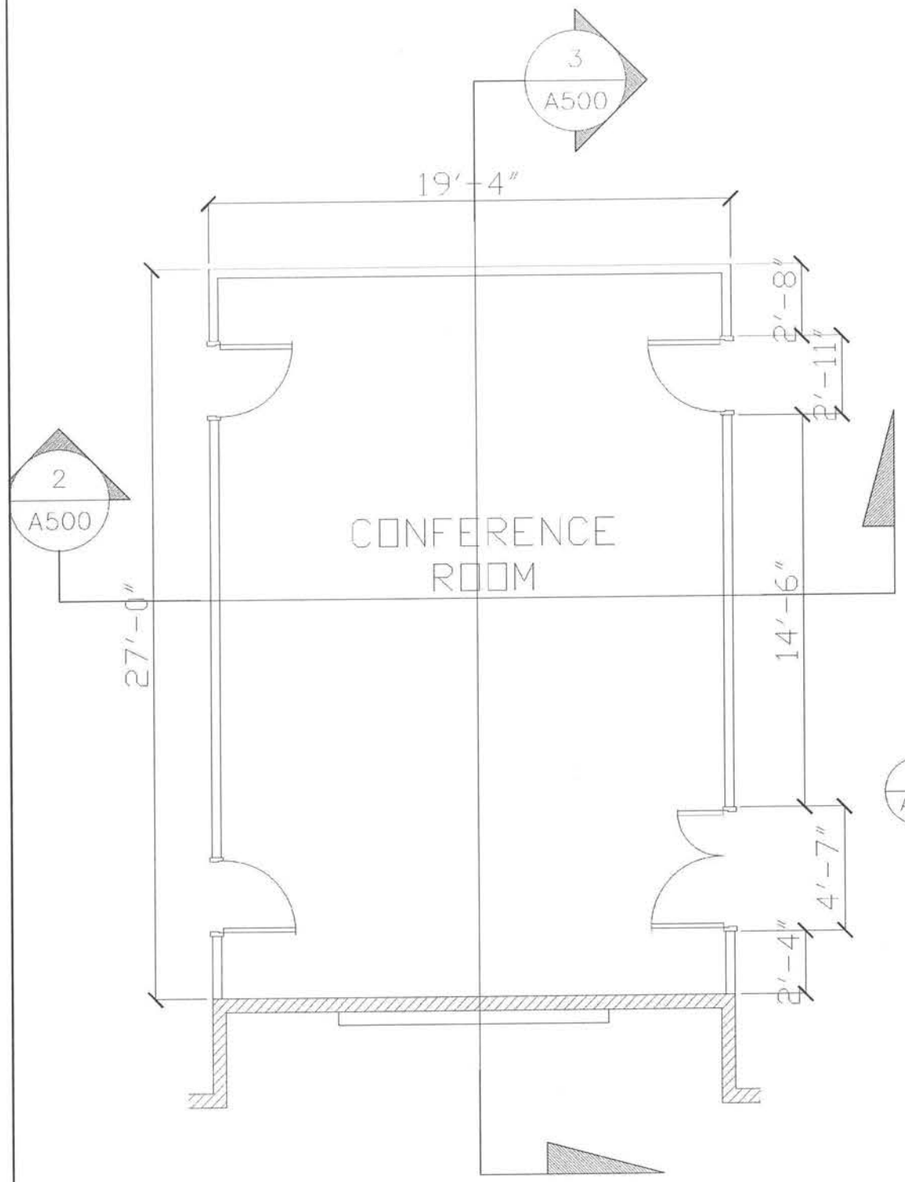

1 A500 **CONFERENCE ROOM (blow up plan)**
SCALE 1" : 3/16"

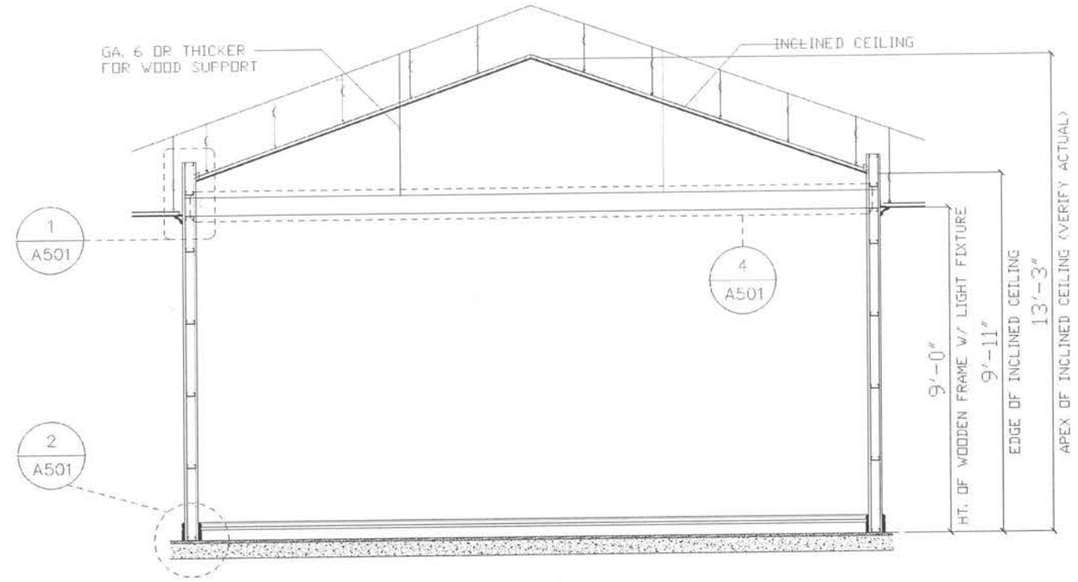

2 A500 **CROSS SECTION**
SCALE 1" : 1/4"

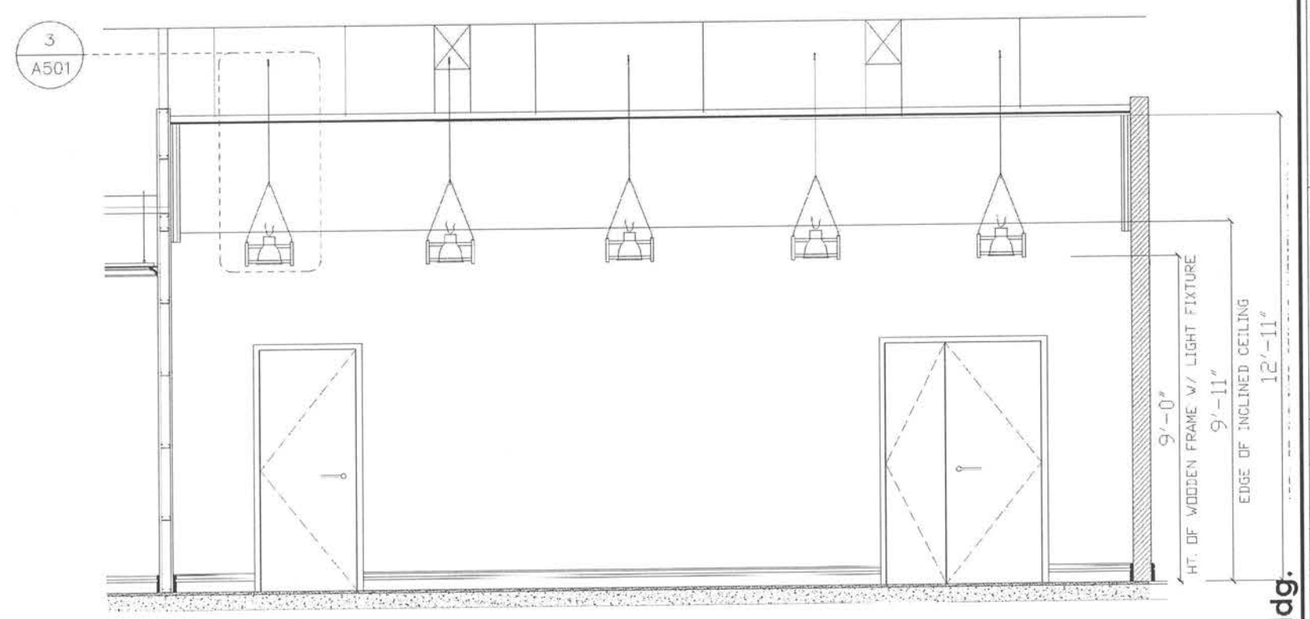

3 A500 **LONGITUDINAL SECTION**
SCALE 1" : 1/4"

R. S. ROQUE
ARCHITECTS
P.O. Box 6
Kolonia, POHNPEI
FSM 96941
Tel. (691) 320-2966
email add.:
archrsroque@yahoo.com
rsa_roque@yahoo.com
CONSULTANT
RIAN SALAS ROQUE
PRC NO. 0024001
REGISTERED ARCHITECT

Proposed F.S.M./Office of Environment and Emergency Management Bldg.

Palikir, Pohnpei

CONTENTS
BLOW UP DET.

Approved

Approved

REVISION	BY

DATE: Feb., 2011
SCALE: AS SHOWN
DRAWN:
JOB:
SHEET
A-500

E.O.C. Bldg.

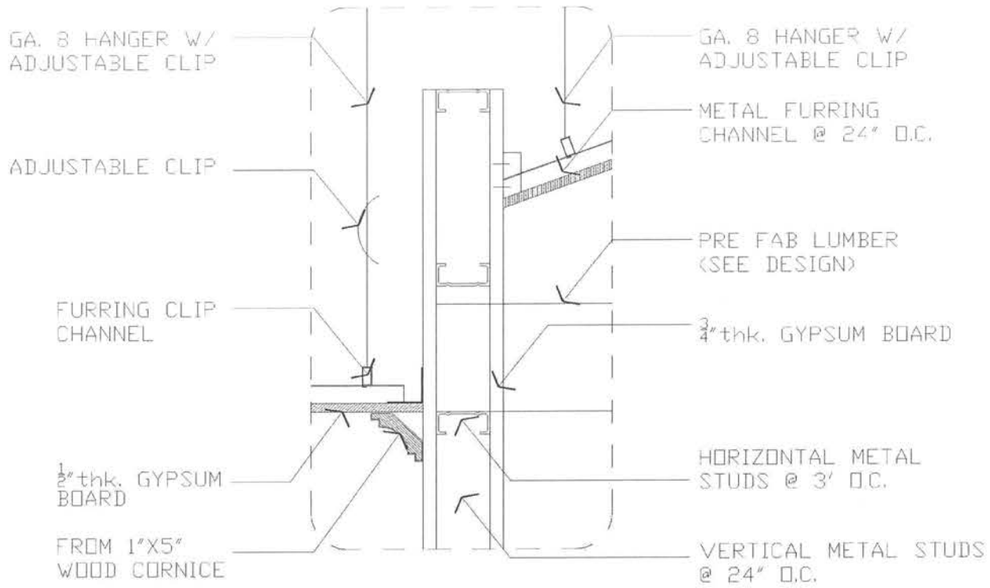

1 A501 **BLOW UP DETAIL 1**
SCALE 1' : 1-1/2"

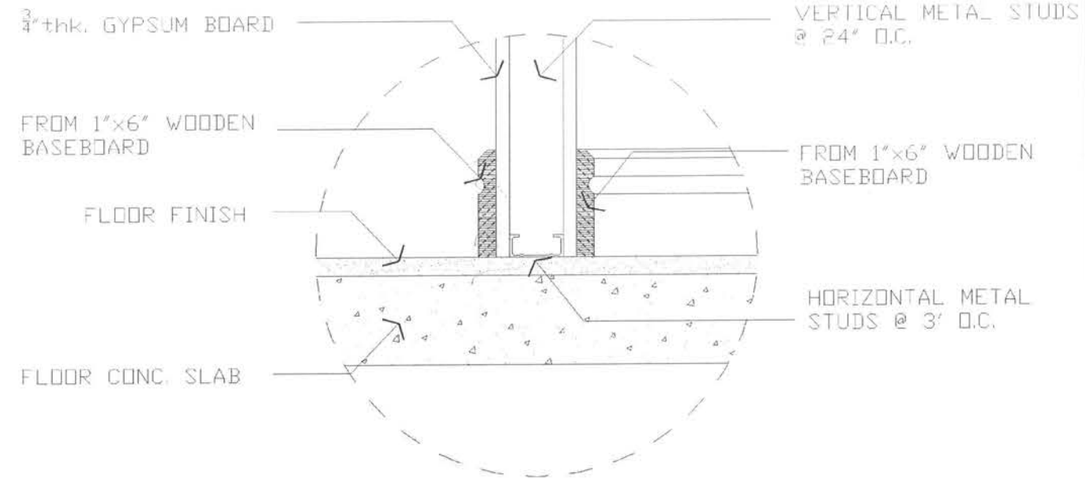

2 A501 **BLOW UP DETAIL 2**
SCALE 1' : 1-1/2"

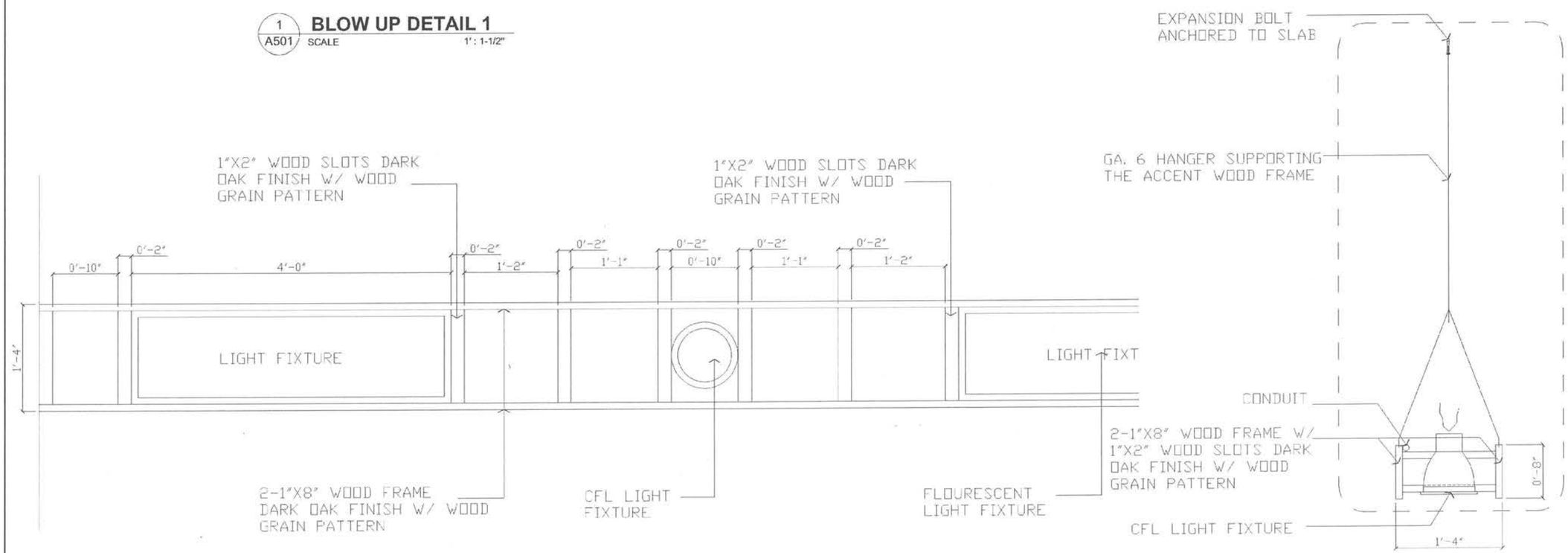

4 A501 **BLOW UP REFLECTED PLAN**
SCALE 1' : 3/4"

3 A501 **BLOW UP DETAIL 3**
SCALE 1' : 3/4"

E.O.C. Bldg.

R. S. ROQUE
ARCHITECTS
P.O. Box 6
Kolonia, POHNPEI
FSM 96941
Tel. (691) 320-2966
email add.:
archrsroque@yahoo.com
ral_roque@yahoo.com

CONSULTANT

RYAN SALAS ROQUE
PROF. NO. 102 9015
PHILIPPINES
REGISTERED ARCHITECT

Proposed F.S.M./Office of Environment and Emergency Management Bldg.

Palikir, Pohnpei

CONTENTS
DETAILS

Approved

Approved

REVISION	BY

DRAWN:
DATE: Feb., 2011
SCALE: AS SHOWN
JOB:
SHEET
A-501

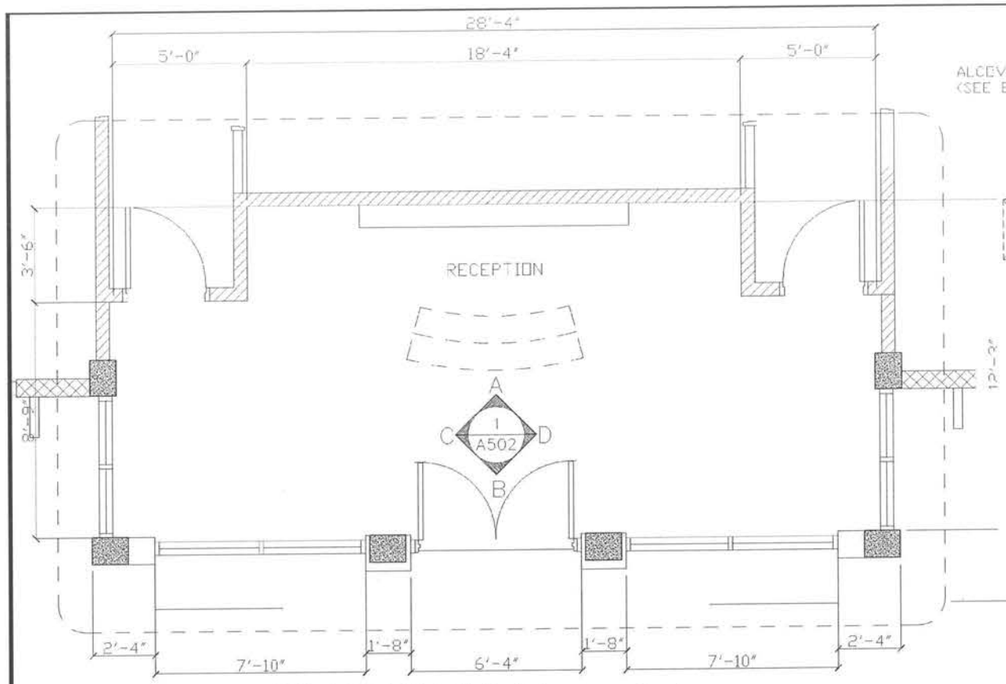

1 A502 **LOBBY AREA (blow up plan)**
SCALE 1' : 3/16"

1 A504

2 A502 **INTERIOR ELEVATION "A"**
SCALE 1' : 1/4"

3 A502 **INTERIOR ELEVATION "D"**
3SCALE 1' : 1/4"

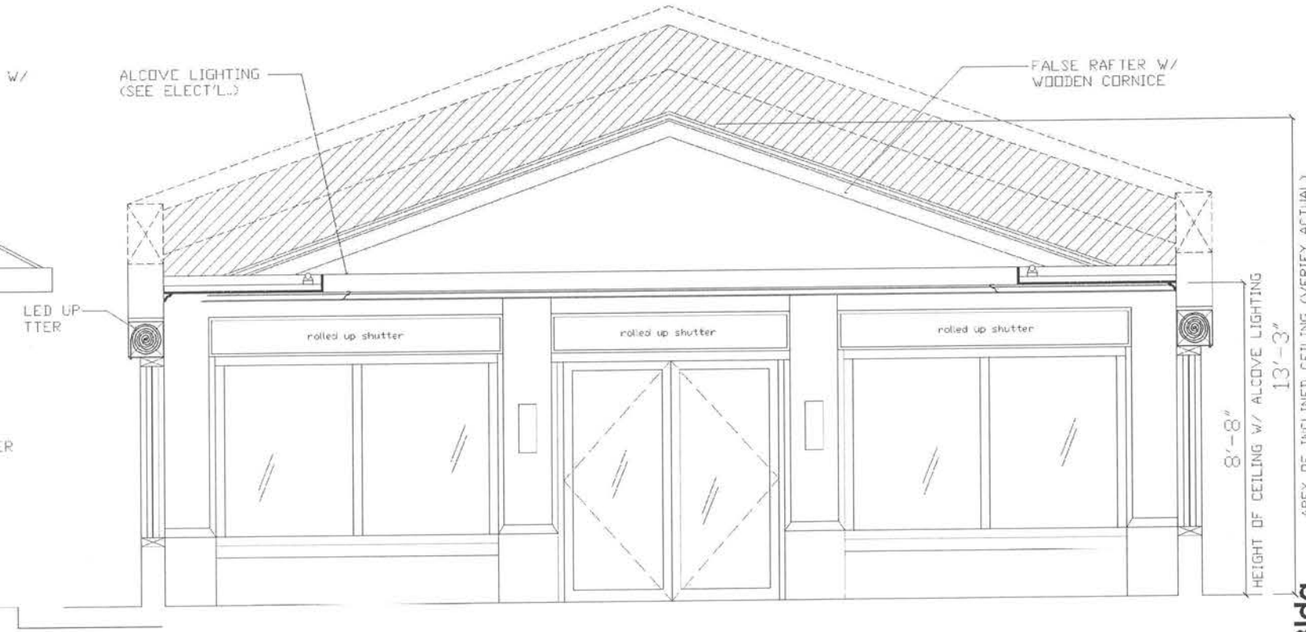

2 A502 **INTERIOR ELEVATION "B"**
SCALE 1' : 1/4"

R. S. ROQUE
ARCHITECTS
P.O. Box 6
Kolonia, POHNPEI
FSM 96941
Tel. (691) 320-2966
email add.:
archrsroque@yahoo.com
rai_roque@yahoo.com
CONSULTANT
RYAN SALAS ROQUE
PRC REG. 0024015
PHILIPPINES
REGISTERED ARCHITECT

Proposed F.S.M./Office of Environment and Emergency Management Bldg.

Palikir, Pohnpei

CONTENTS
INT. ELEV.

Approved

Approved

REVISION	BY

DATE: Feb., 2011
SCALE: AS SHOWN
DRAWN:
JOB:
SHEET
A-502

E.O.C. Bldg.

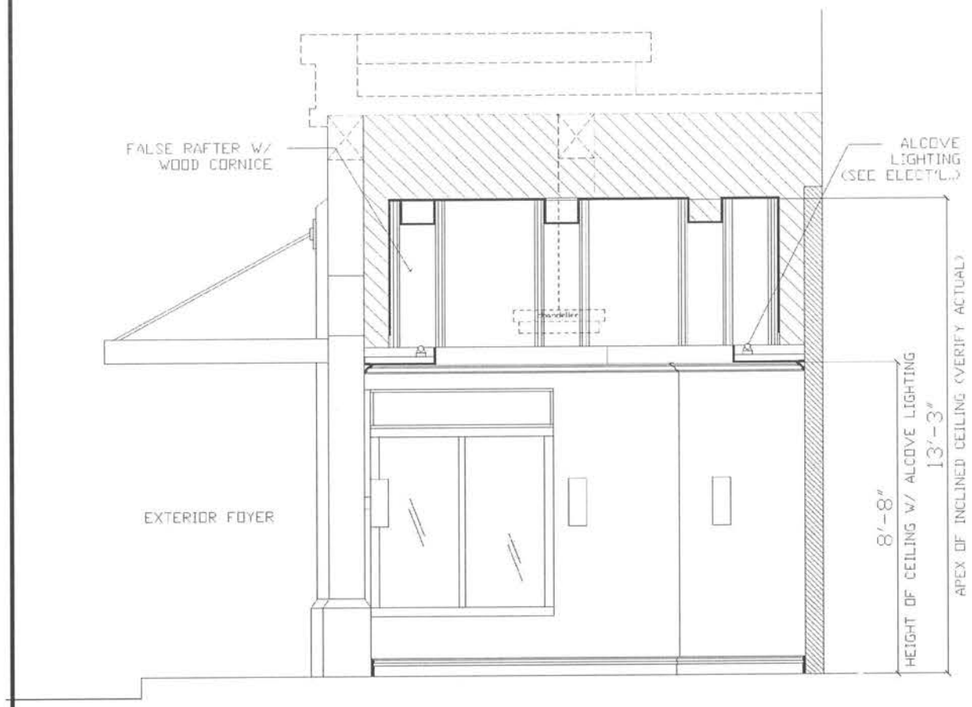

1 / A503 **INTERIOR ELEVATION "C"**
SCALE 1": 1/4"

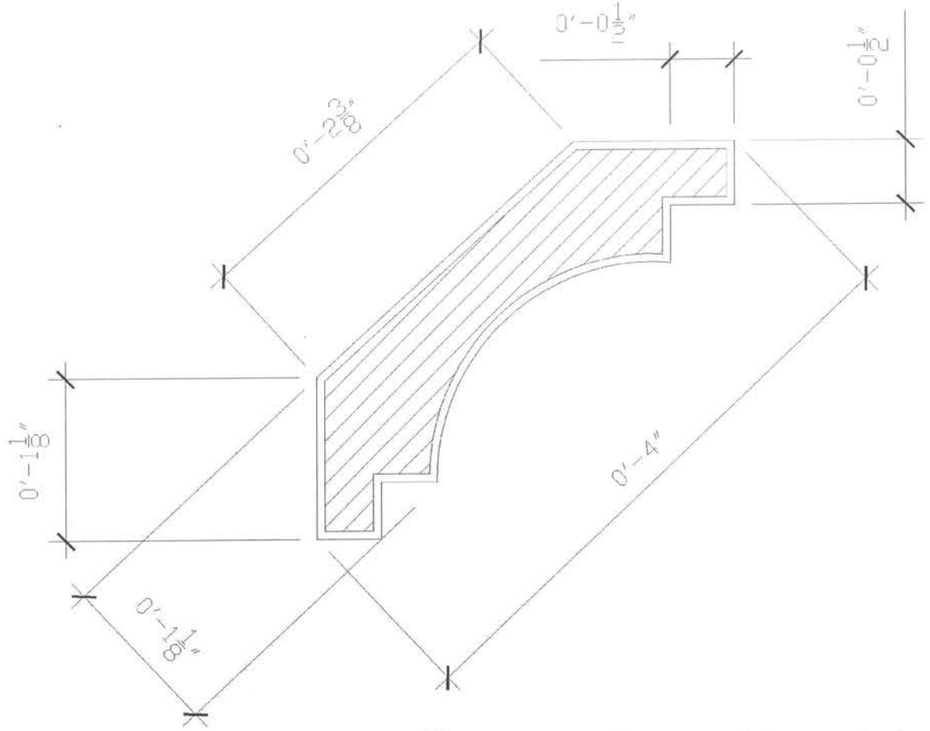

1 / A503 **WOOD CORNICE DET. (actual size)**
SCALE 1": 1'

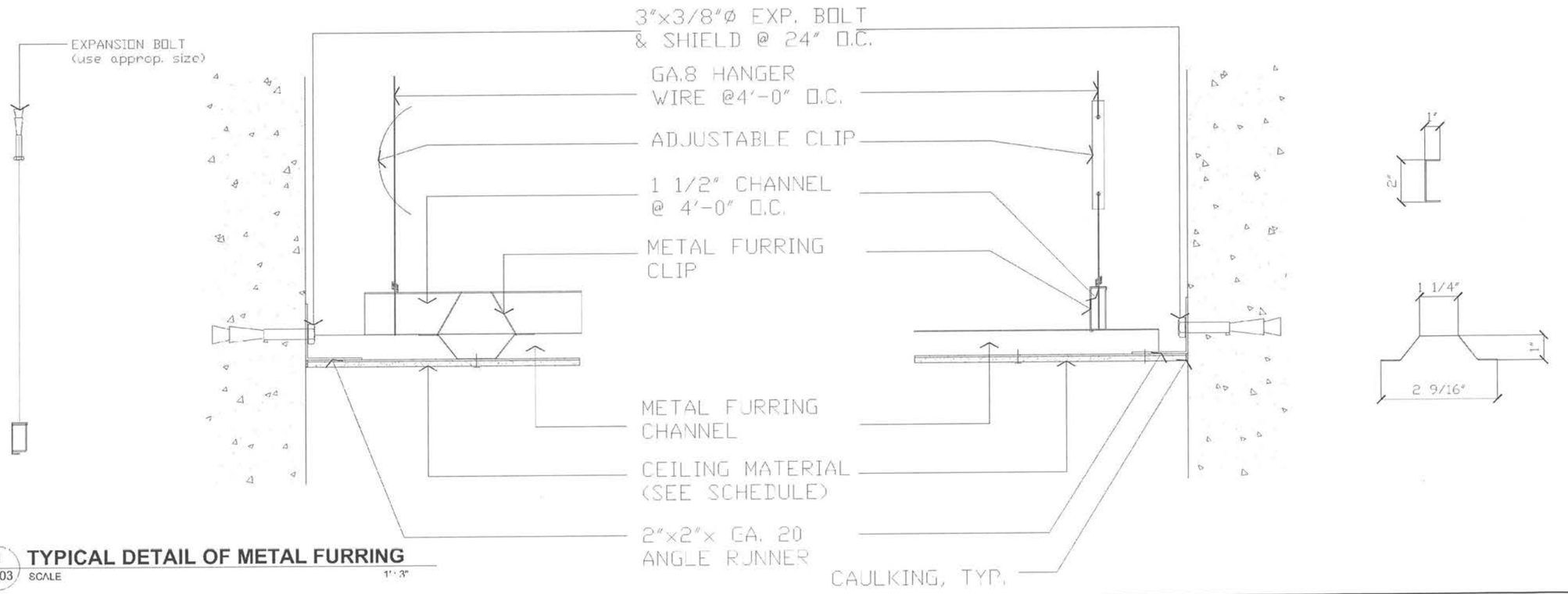

1 / A503 **TYPICAL DETAIL OF METAL FURRING**
SCALE 1": 3"

E.O.C. Bldg.

R. S. ROQUE
ARCHITECTS
P.O. Box 6
Kolonia, POHNPEI
FSM 96941
Tel. (691) 320-2966
email add.:
archrsroque@yahoo.com
rsl_roque@yahoo.com

CONSULTANT

RYAN SALAS ROQUE
PHILIPPINES
REGISTERED ARCHITECT

Proposed F.S.M./Office of Environment and Emergency Management Bldg.

Palikir, Pohnpei

CONTENTS
DETAILS

Approved

Approved

REVISION	BY

DATE: Feb., 2011
SCALE: AS SHOWN
DRAWN:
JOB:
SHEET
A-503

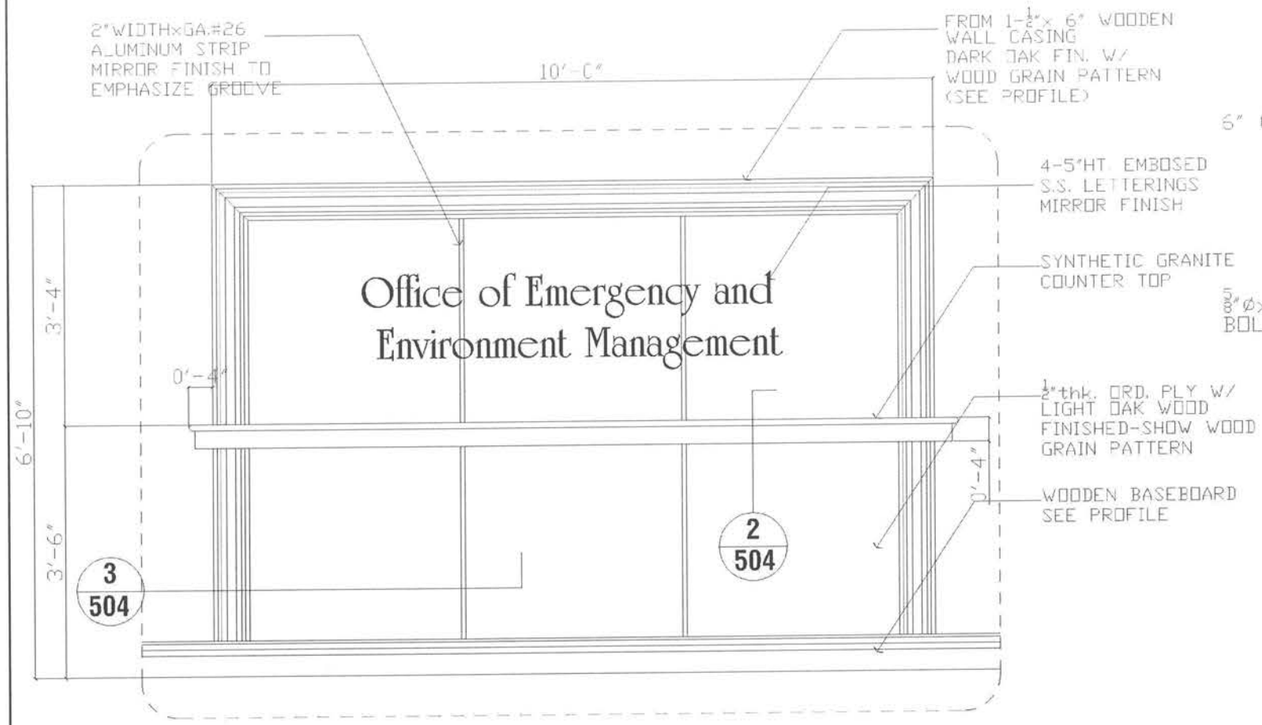

1 A504 **BLOW UP ELEVATION OF ACCENT WALL**
SCALE 1' : 1/2"

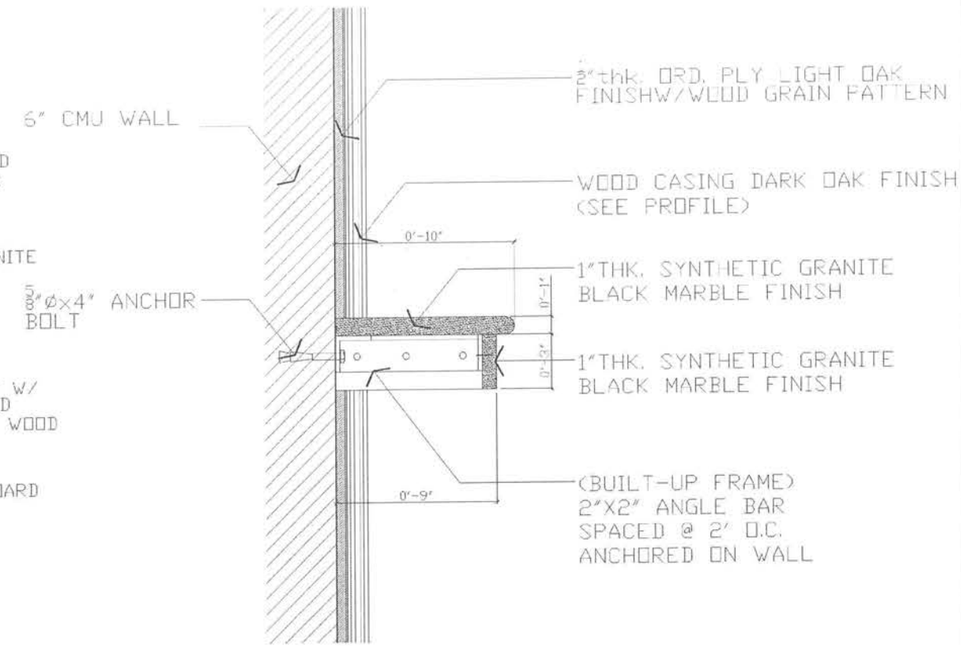

2 A504 **SPOT DETAIL**
SCALE 1' : 1-1/2"

NOTE: WOOD CASING SHOULD BE DARK OAK FINISHED
WITH WOOD GRAIN PATTERN

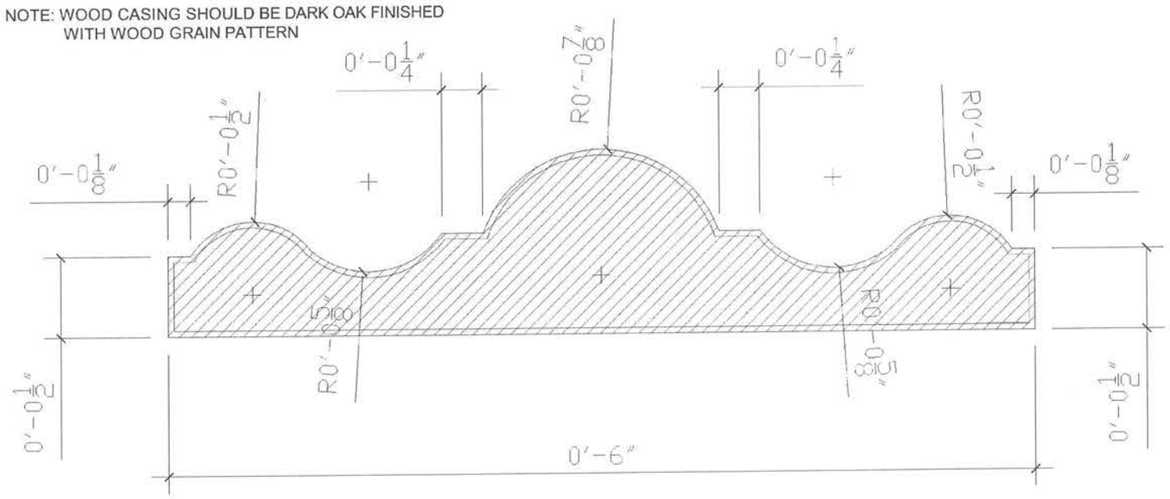

4 A504 **WOOD CASING (actual size)**
SCALE 1' : 1'

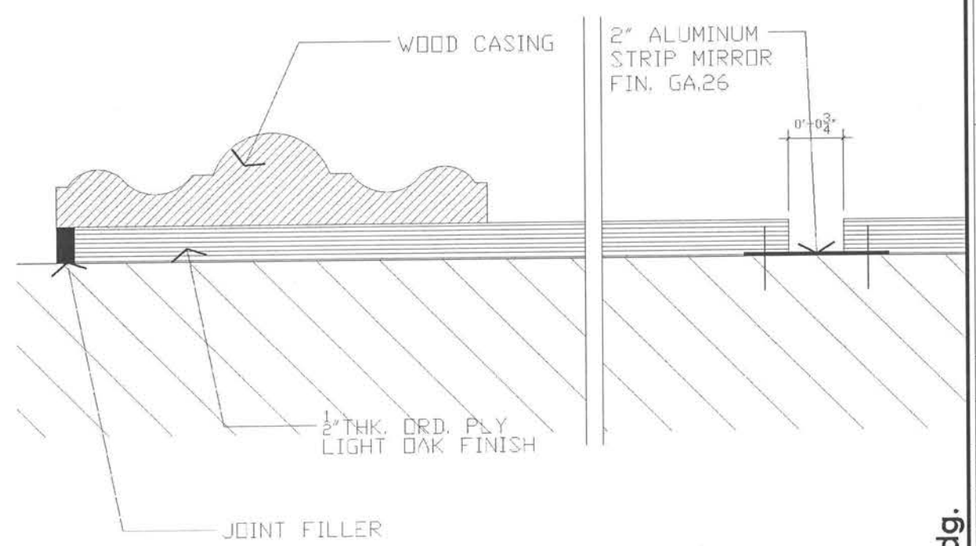

3 A504 **SPOT DETAIL**
SCALE NTS

R. S. ROQUE
ARCHITECTS
P.O. Box 6
Kolonia, POHNPEI
FSM 96941
Tel. (691) 320-2966
email add.:
archrsroque@yahoo.com
ral_roque@yahoo.com

CONSULTANT

RYAN SALAS ROQUE
PRC NO. 0024015
REGISTERED ARCHITECT

Proposed F.S.M./Office of Environment and Emergency Management Bldg.

Palikir, Pohnpei

CONTENTS
DETAILS

Approved

Approved

REVISION	BY

DATE: Feb., 2011
SCALE: AS SHOWN
DRAWN:
JOB:
SHEET
A-504

E.O.C. Bldg.

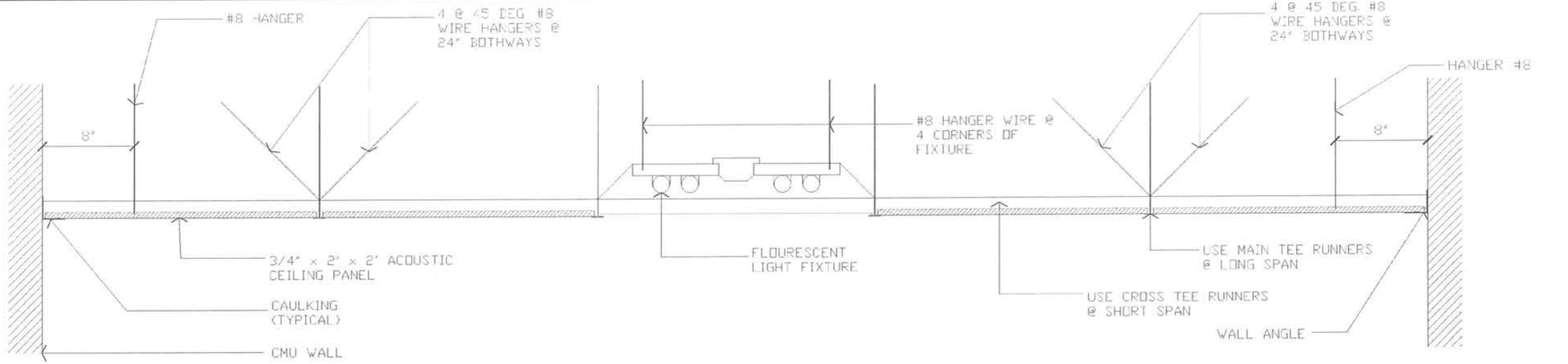

1 A505 **TYPICAL DETAIL OF ACOUSTIC TILES ON T RUNNER**
SCALE NTS

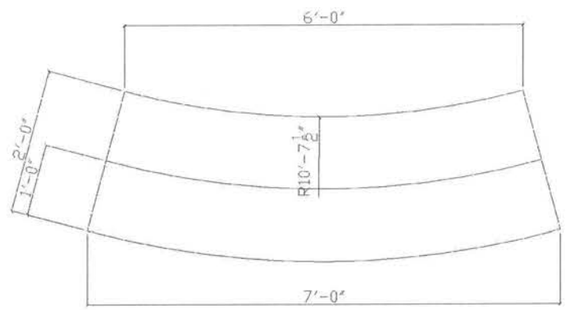

2 A505 **PLAN**
SCALE 1" : 1/2"

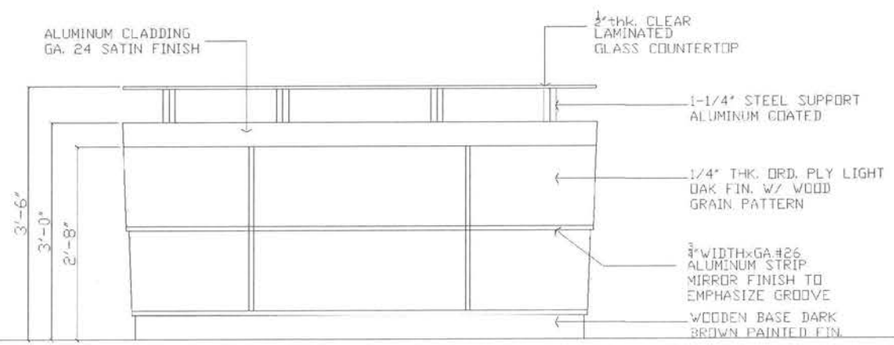

3 A505 **OUTSIDE ELEVATION**
SCALE 1" : 1/2"

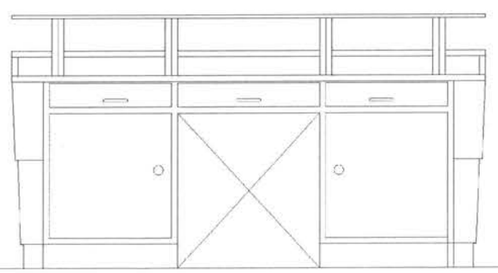

4 A505 **INSIDE ELEVATION**
SCALE 1" : 1/2"

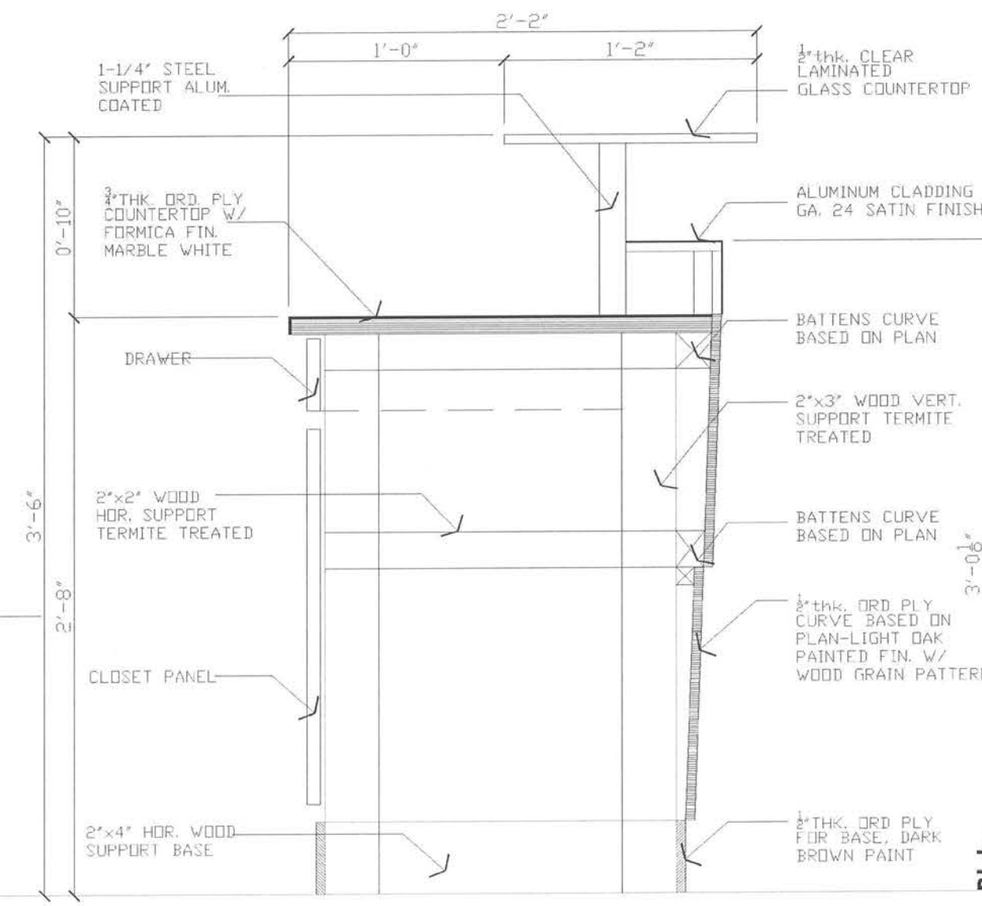

5 A505 **SECTION OF RECEPTIONIST TABLE**
SCALE 1" : 1-1/2"

E.O.C. Bldg.

R. S. ROQUE
ARCHITECTS
P.O. Box 6
Kolonia, POHNPEI
FSM 96941
Tel. (691) 320-2966
e-mail add.:
archr.roque@yahoo.com
rai_roque@yahoo.com
CONSULTANT
RYAN SALAS ROQUE
PHILIPPINES
REGISTERED ARCHITECT

Proposed F.S.M./Office of Environment and Emergency Management Bldg.

Palikir, Pohnpei

CONTENTS
DETAILS

Approved
Approved

REVISION	BY

DATE: Feb., 2011
SCALE: AS SHOWN
DRAWN:
JOB:
SHEET
A-505

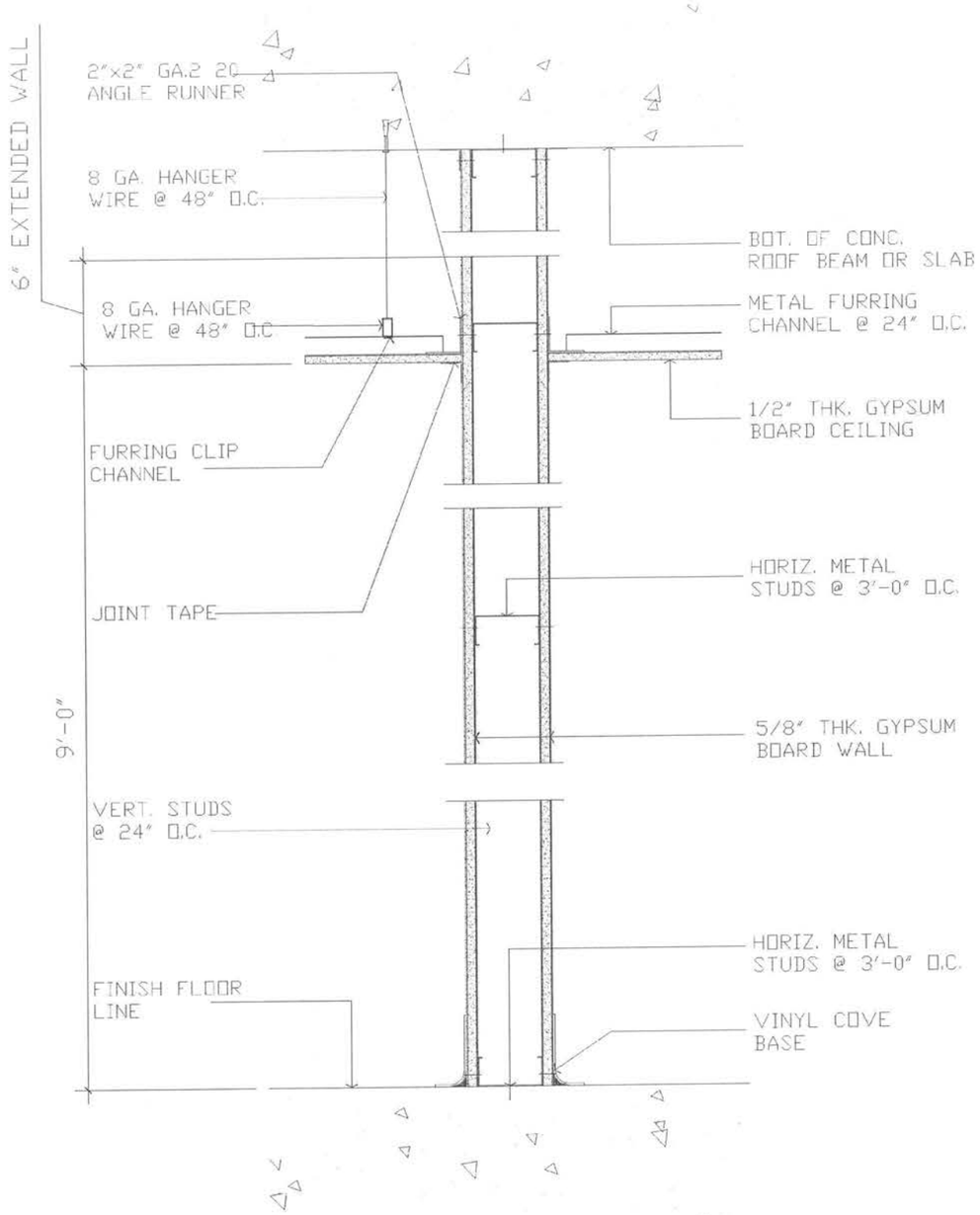

1 A506 **TYPICAL DETAIL OF DRY WALL PARTITION**
SCALE 1'. 1-1/2"

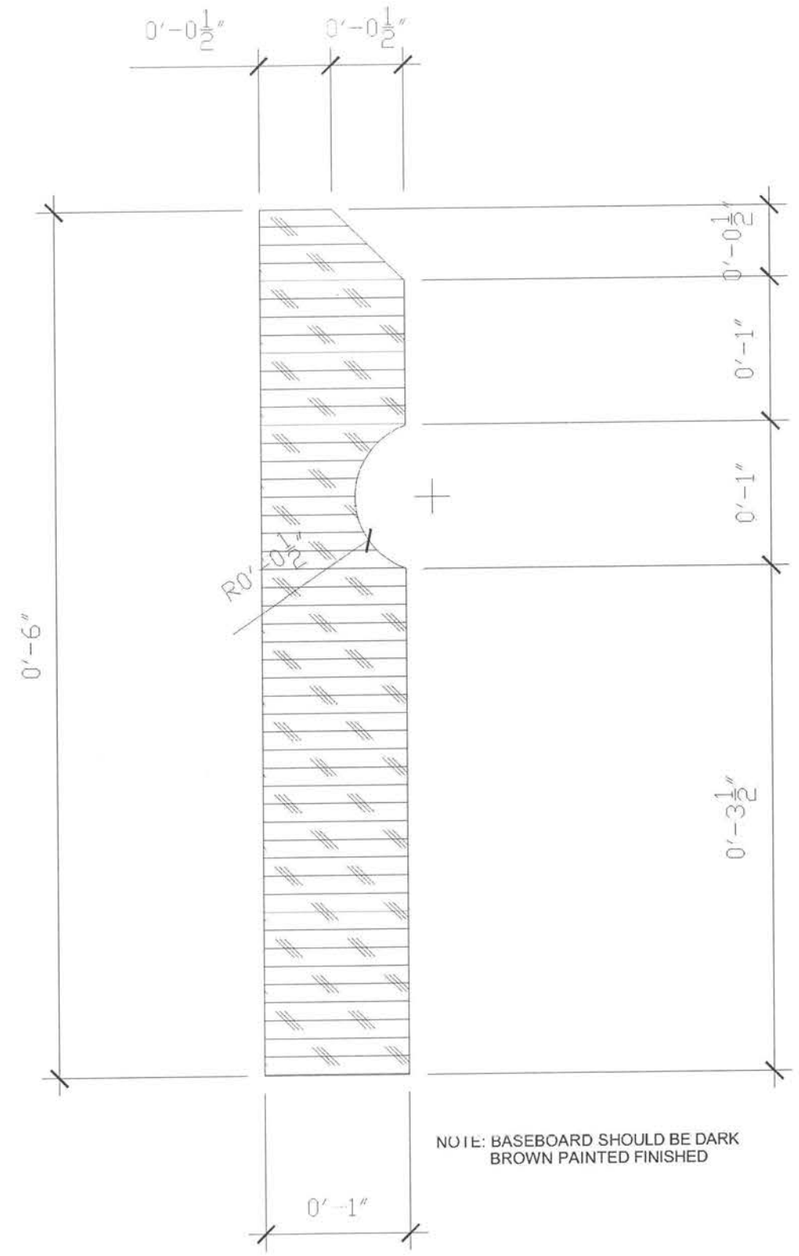

2 A506 **SECTION OF WOODEN BASEBOARD (actual size)**
SCALE 1' : 1'

E.O.C. Bldg.

R. S. ROQUE
ARCHITECTS
P.O. Box 6
Kolonia, POHNPEI
FSM 96941
Tel. (691) 320-2966
email add.:
archrsroque@yahoo.com
rsl_roque@yahoo.com

CONSULTANT

RYAN SALAS ROQUE
PHILIPPINES
REGISTERED ARCHITECT

Proposed F.S.M./Office of Environment and Emergency Management Bldg.

Palikir, Pohnpei

CONTENTS
DETAILS

Approved

Approved

REVISION	BY

DATE: Feb., 2011
SCALE: AS SHOWN
DRAWN:
JOB:
SHEET
A-506

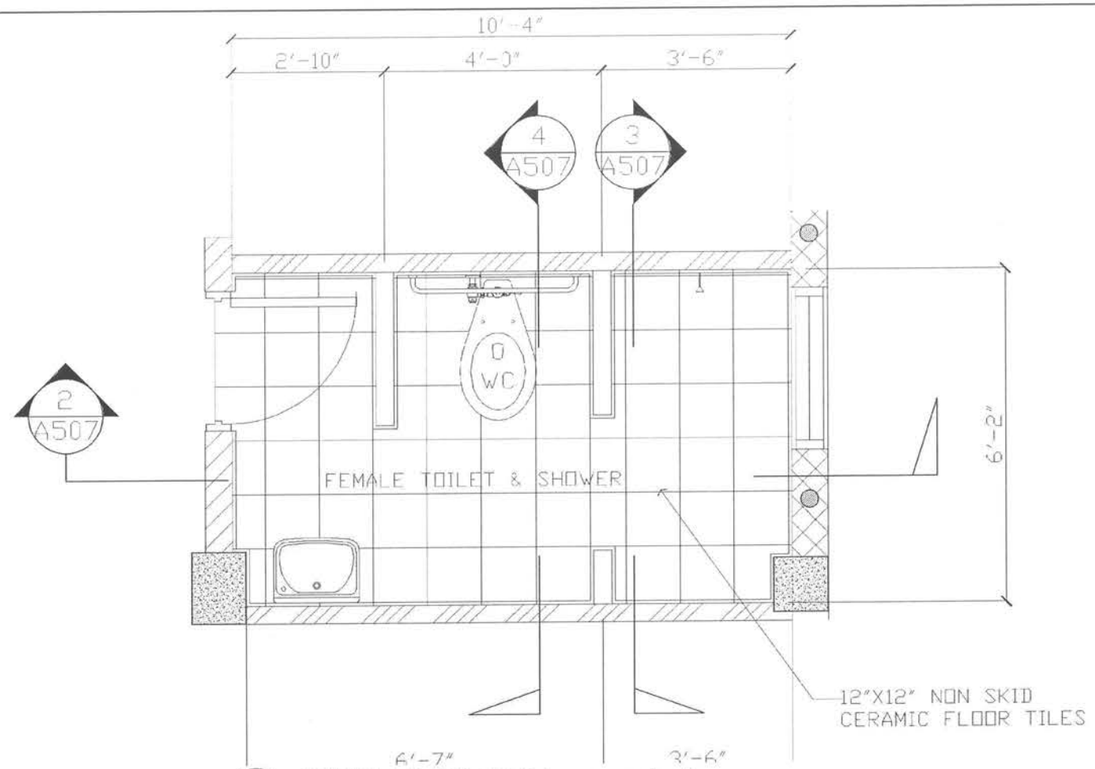

1 A507 **FEMALE TOILET (blow up plan)**
SCALE 1' : 3/8"

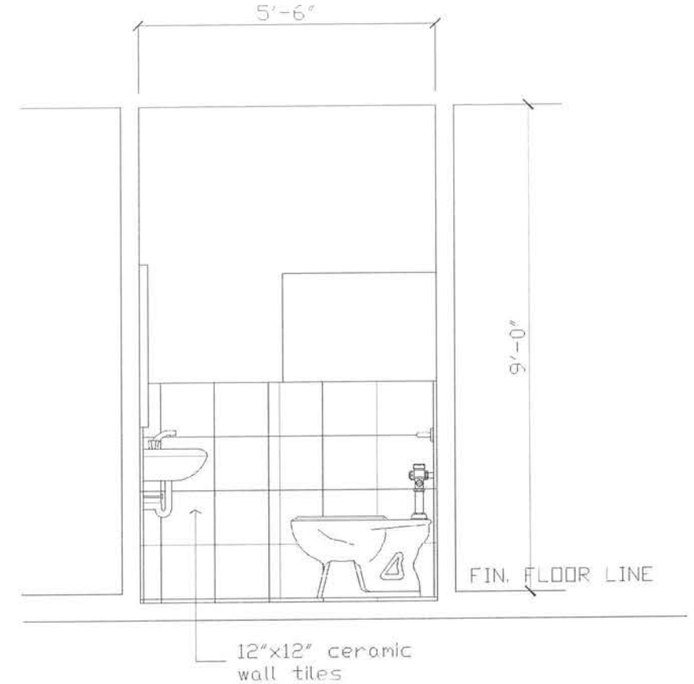

4 A507 **ELEVATION "C"**
SCALE 1' : 3/8"

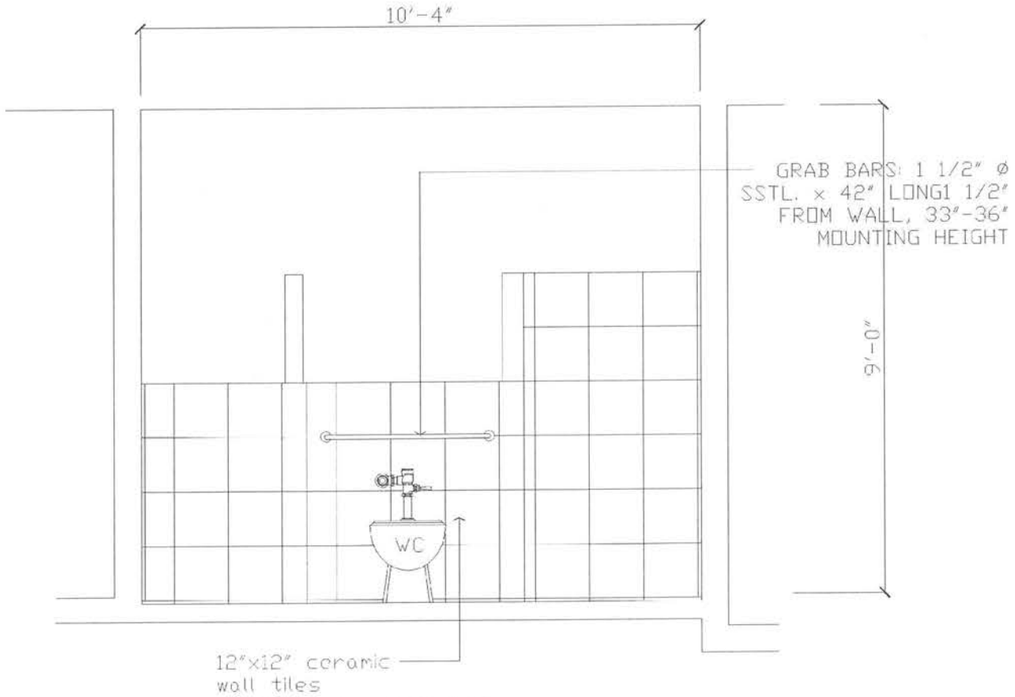

2 A507 **ELEVATION "A"**
SCALE 1' : 3/8"

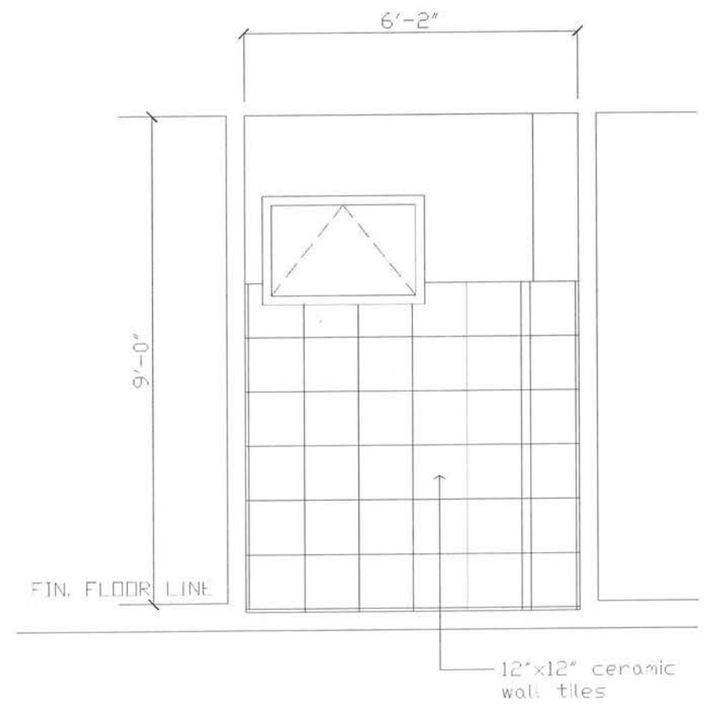

3 A507 **ELEVATION "B"**
SCALE 1' : 3/8"

R. S. ROQUE
ARCHITECTS
P.O. Box 6
Kolonia, POHNPEI
FSM 96941
Tel. (691) 320-2966
email add.:
archrsroque@yahoo.com
rai_roque@yahoo.com
CONSULTANT
RYAN SALAS ROQUE
REGISTERED ARCHITECT

Proposed F.S.M./Office of Environment and Emergency Management Bldg.

Palikir, Pohnpei

CONTENTS
INT. ELEVATIONS

Approved

Approved

REVISION	BY

DATE: Feb., 2011
SCALE: AS SHOWN
DRAWN:
JOB:
SHEET
A-507

E.O.C. Bldg.

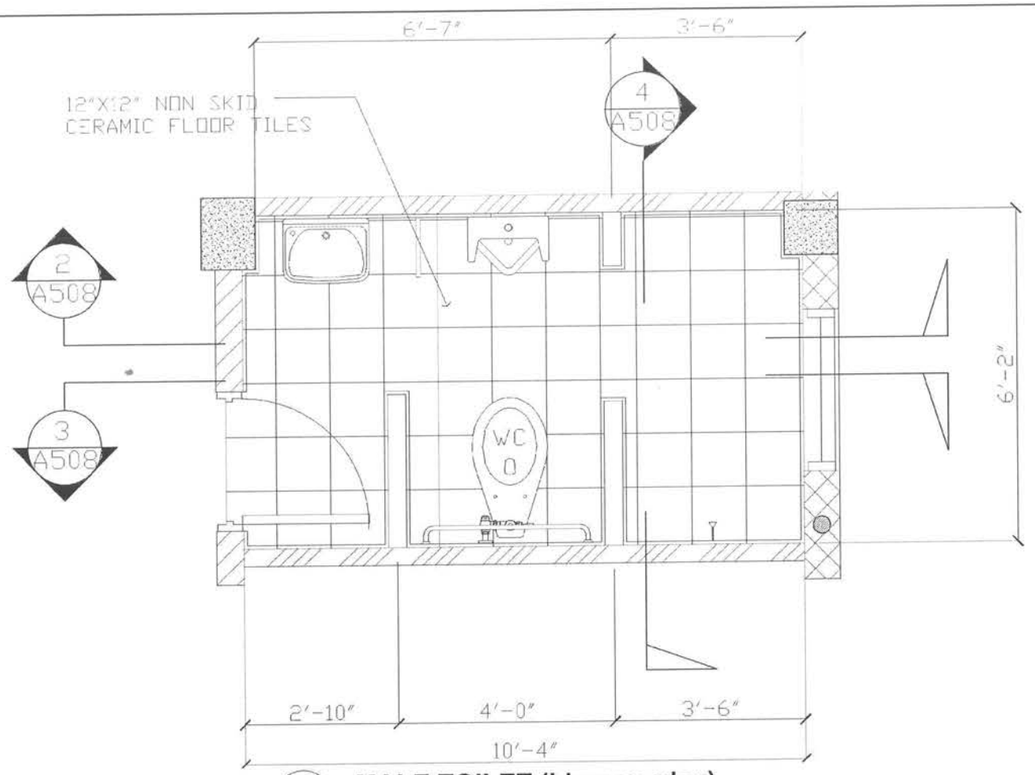

1 A508 **MALE TOILET (blow up plan)**
SCALE 1" : 3/8"

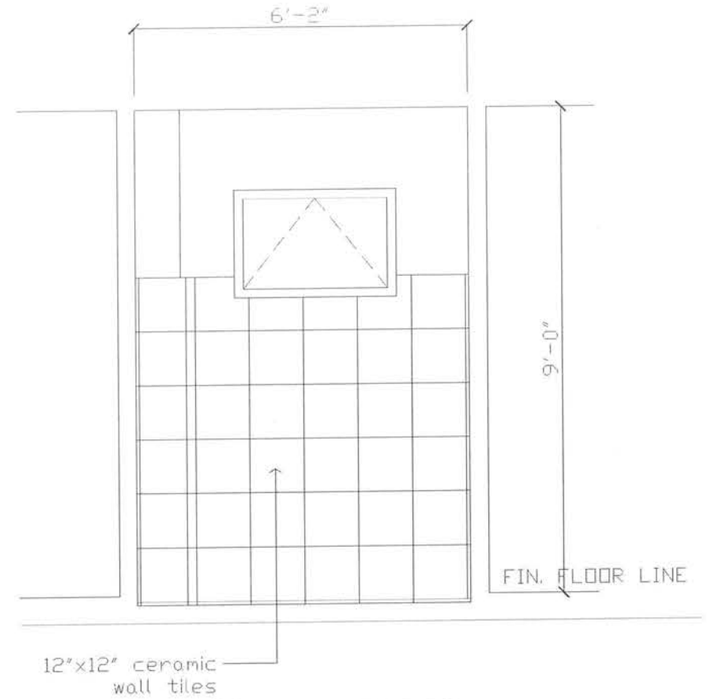

4 A508 **ELEVATION "C"**
SCALE 1" : 3/8"

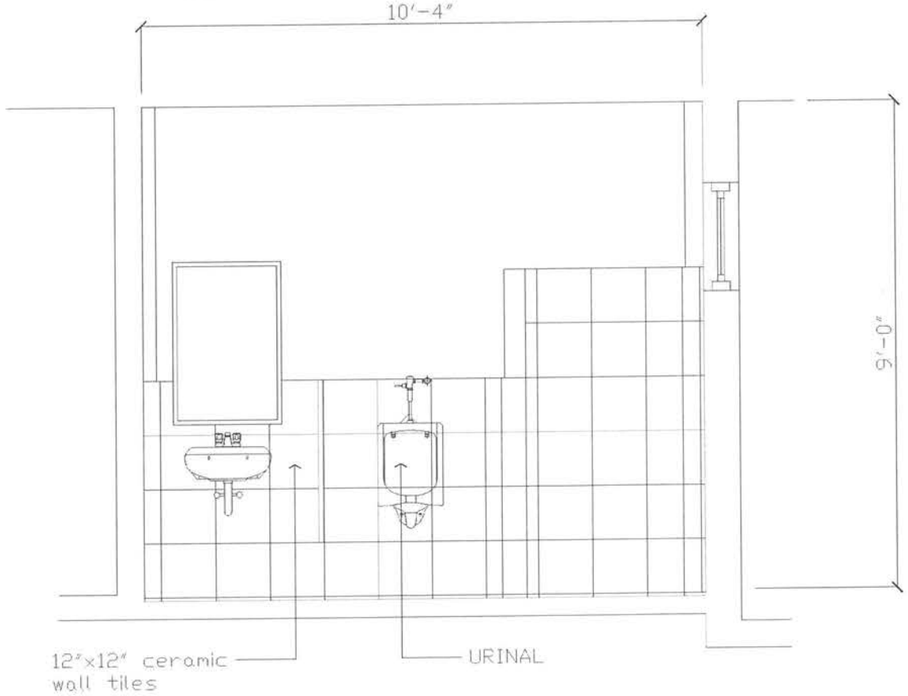

2 A508 **ELEVATION "A"**
SCALE 1" : 3/8"

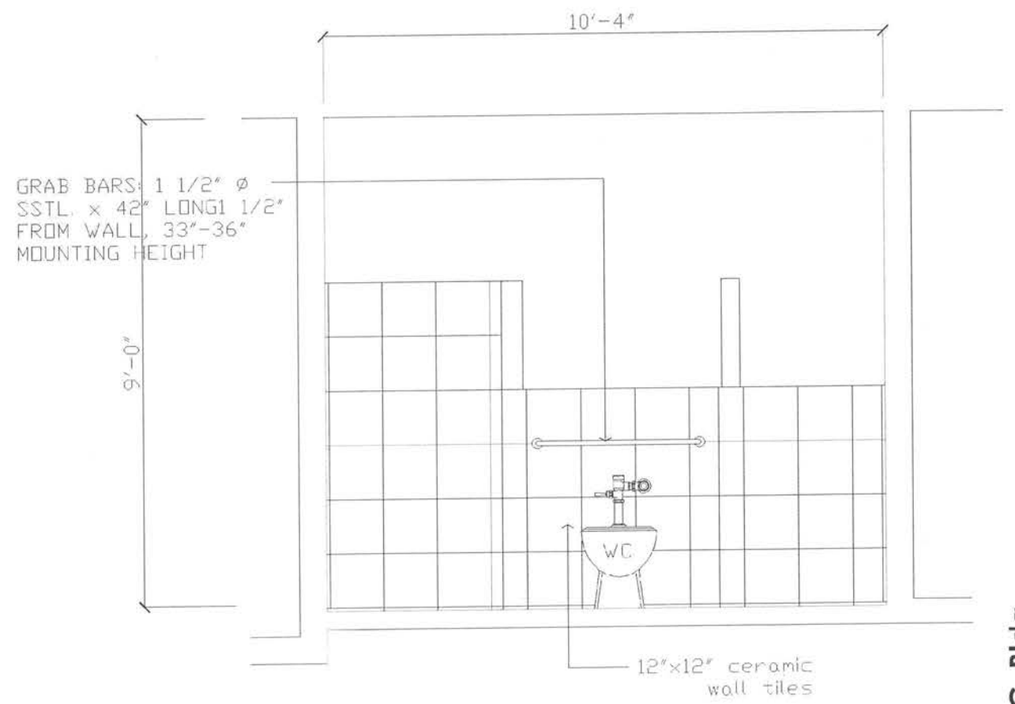

3 A508 **ELEVATION "B"**
SCALE 1" : 3/8"

E.O.C. Bldg.

R. S. ROQUE
ARCHITECTS
P.O. Box 6
Kolonia, POHNPEI
FSM 96941
Tel. (691) 320-2966
email add.:
archrsroque@yahoo.com
rsl_roque@yahoo.com

CONSULTANT

RYAN SALAS ROQUE
PSC NO. 0024015
PHILIPPINES
REGISTERED ARCHITECT

Proposed F.S.M./Office of Environment and Emergency Management Bldg.

Palikir, Pohnpei

CONTENTS
INT. ELEVATIONS

Approved

Approved

REVISION	BY

DATE: Feb., 2011
SCALE: AS SHOWN
DRAWN:
JOB:
SHEET
A-508

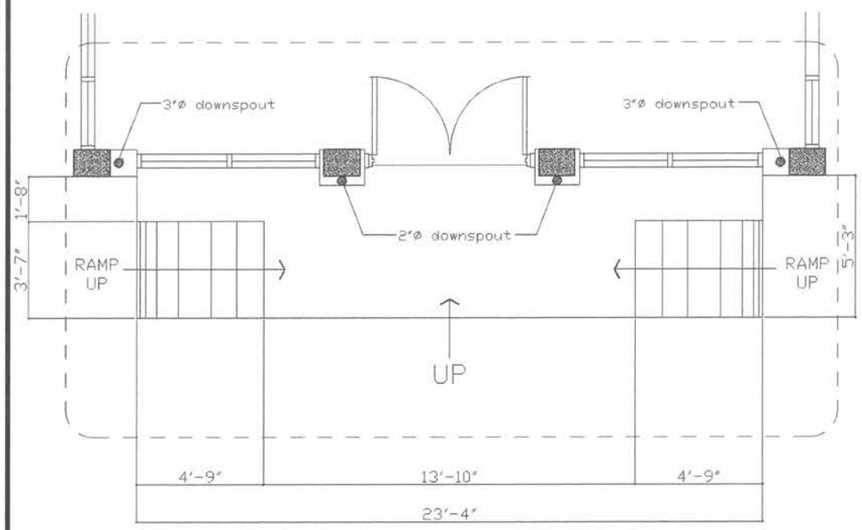

1 A509 **ENTRANCE FOYER (blow up plan)**
SCALE 1' : 3/16"

3 A509 **BLOW UP ELEVATION OF FACADE**
SCALE 1' : 1/4"

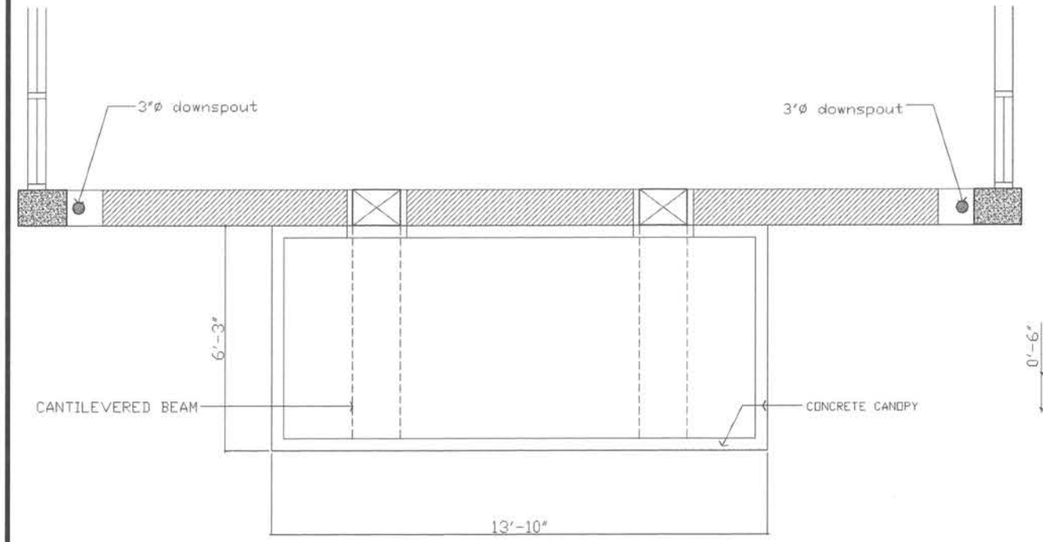

2 A509 **ROOF PLAN (blow up plan)**
SCALE 1' : 1/4"

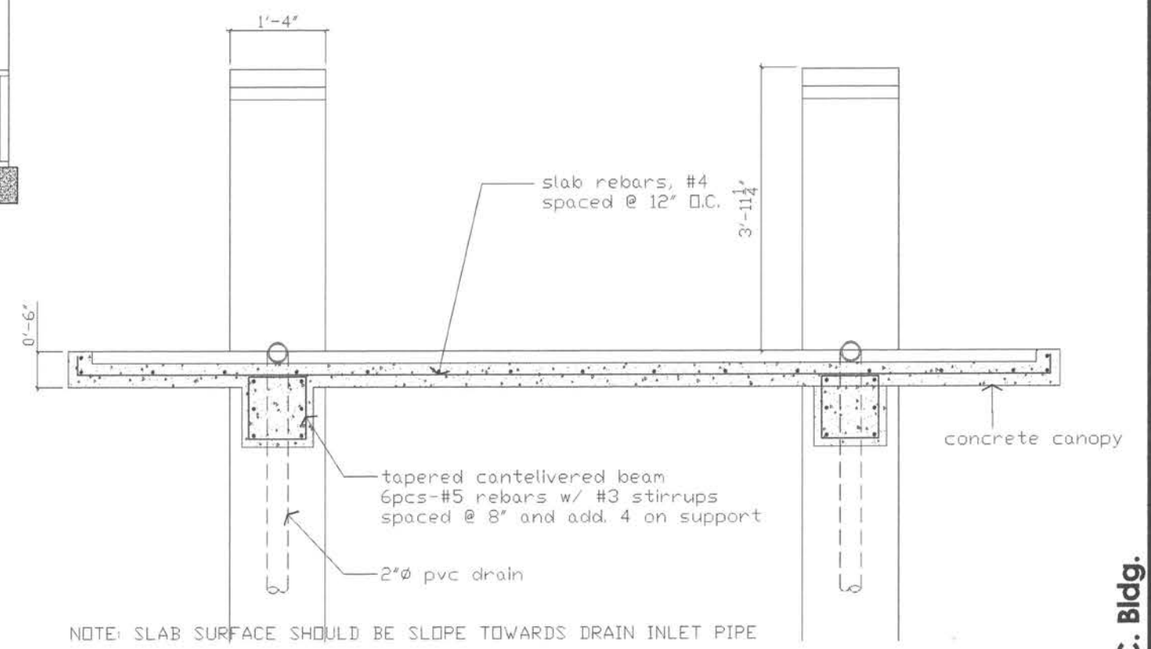

4 A509 **DETAILED SECTION OF CANOPY**
SCALE 1' : 1/2"

R. S. ROQUE
ARCHITECTS
P.O. Box 6
Kolonia, POHNPEI
FSM 96941
Tel. (691) 320-2966
email add.:
archrsroque@yahoo.com
rsl_roque@yahoo.com

CONSULTANT

RAM SALAS ROQUE
PRC NO.002A015
PHIL. IPPINES
REGISTERED ARCHITECT

Proposed F.S.M./Office of Environment and Emergency Management Bldg.

Palikir, Pohnpei

CONTENTS
DETAILS

Approved

Approved

REVISION	BY

DATE: Feb., 2011
SCALE: AS SHOWN
DRAWN:
JOB:
SHEET
A-509

E.O.C. Bldg.

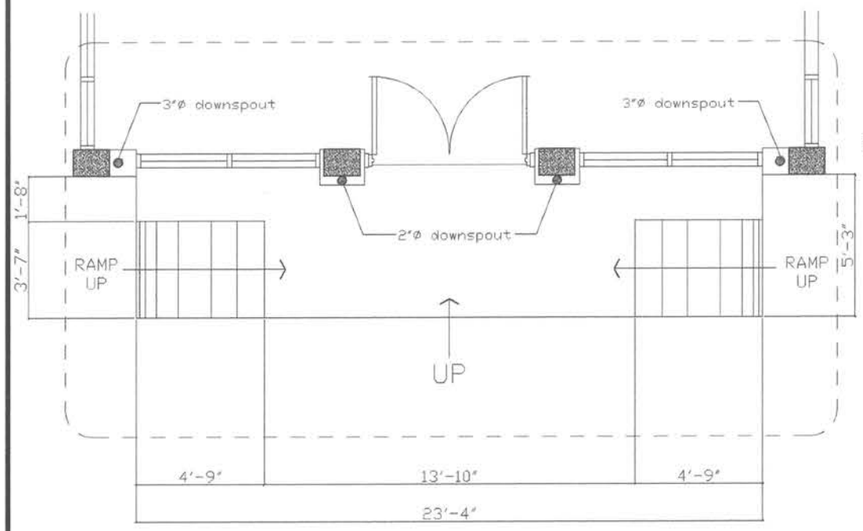

1 A509 **ENTRANCE FOYER (blow up plan)**
SCALE 1' : 3/16"

3 A509 **BLOW UP ELEVATION OF FACADE**
SCALE 1' : 1/4"

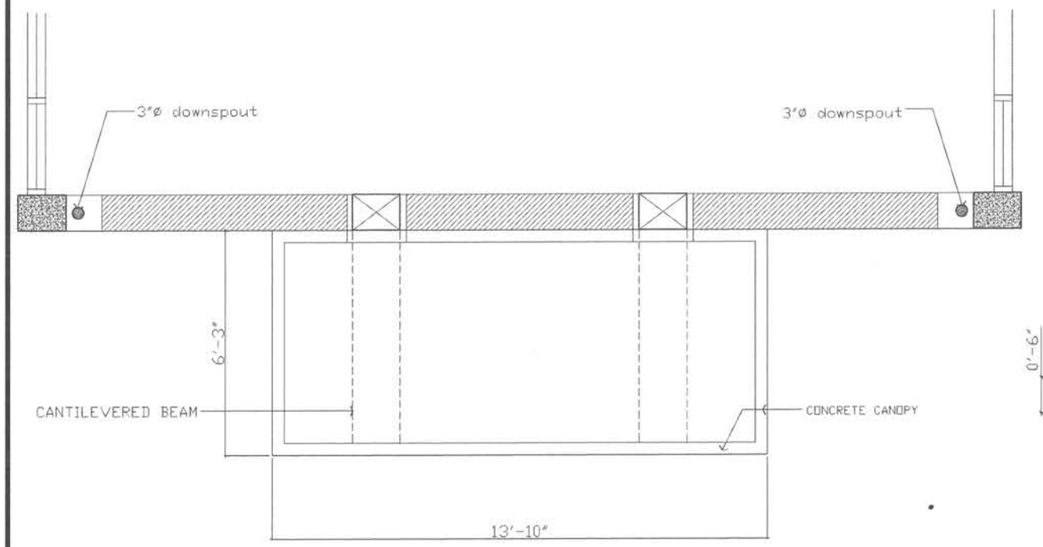

2 A509 **ROOF PLAN (blow up plan)**
SCALE 1' : 1/4"

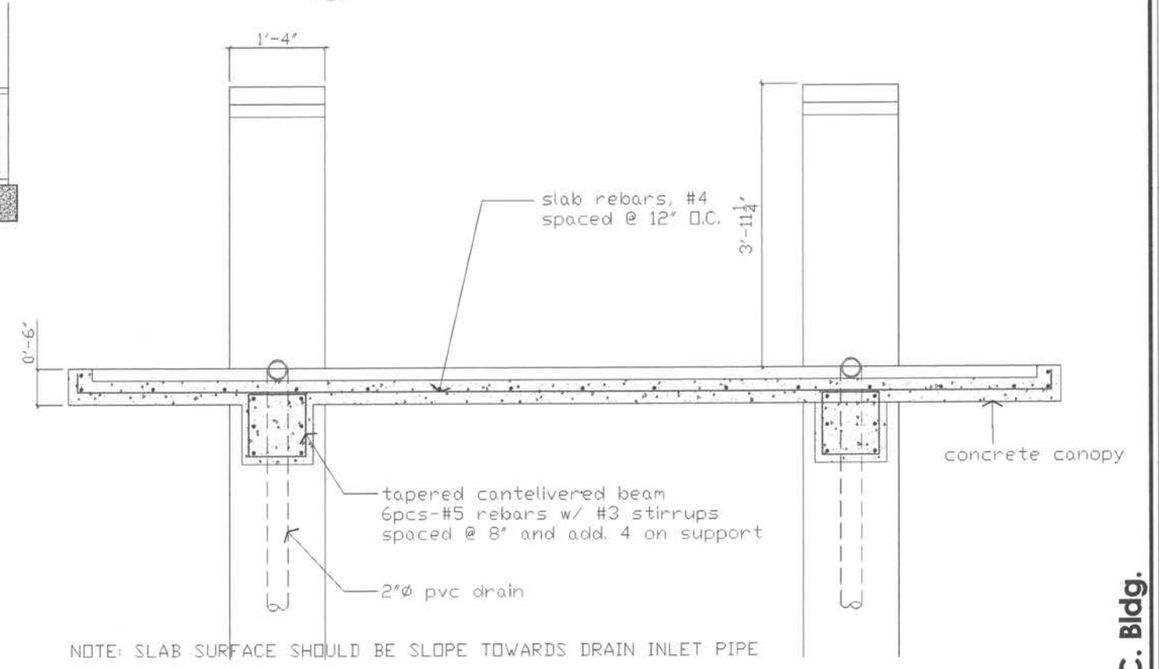

NOTE: SLAB SURFACE SHOULD BE SLOPE TOWARDS DRAIN INLET PIPE

4 A509 **DETAILED SECTION OF CANOPY**
SCALE 1' : 1/2"

R. S. ROQUE
ARCHITECTS
P.O. Box 6
Kolonia, POHNPEI
FSM 96941
Tel. (691) 320-2966
email add.:
archrsroque@yahoo.com
rai_roque@yahoo.com

CONSULTANT

RYAN SALAS ROQUE
PRC NO. 0020015
PHILIPPINES
REGISTERED ARCHITECT

Proposed F.S.M./Office of Environment and Emergency Management Bldg.
Palikir, Pohnpei

CONTENTS
DETAILS

Approved

Approved

REVISION	BY

DATE: Feb., 2011
SCALE: AS SHOWN
DRAWN:
JOB:
SHEET
A-509

E.O.C. Bldg.

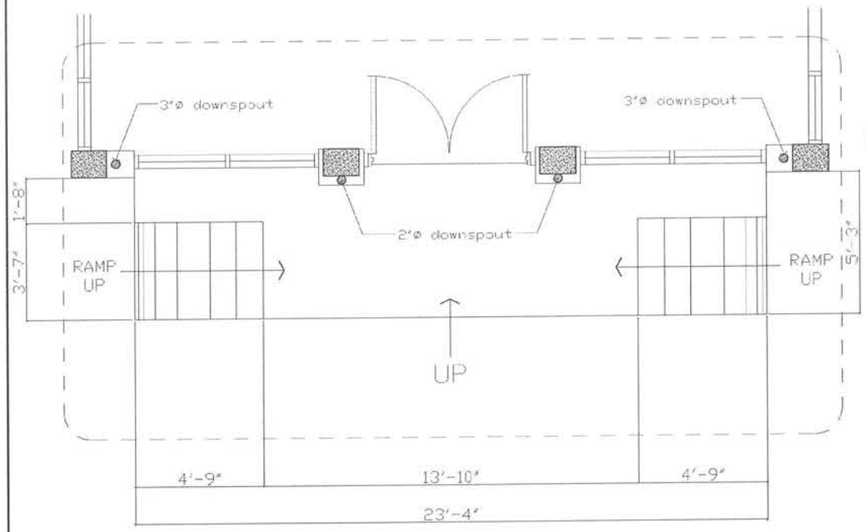

1 A509 **ENTRANCE FOYER (blow up plan)**
SCALE 1": 3/16"

3 A509 **BLOW UP ELEVATION OF FACADE**
SCALE 1": 1/4"

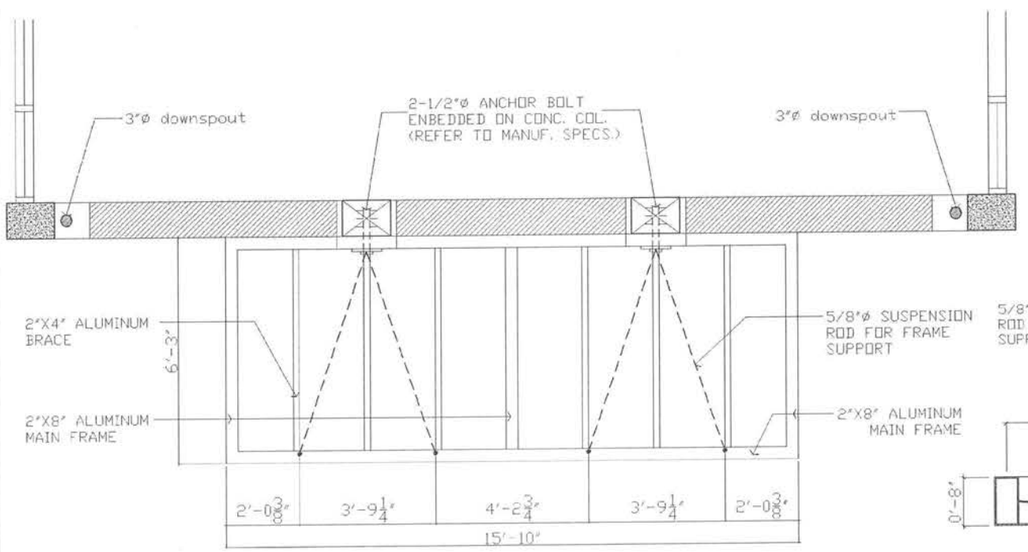

2 A509 **ROOF PLAN (blow up plan)**
SCALE 1": 1/4"

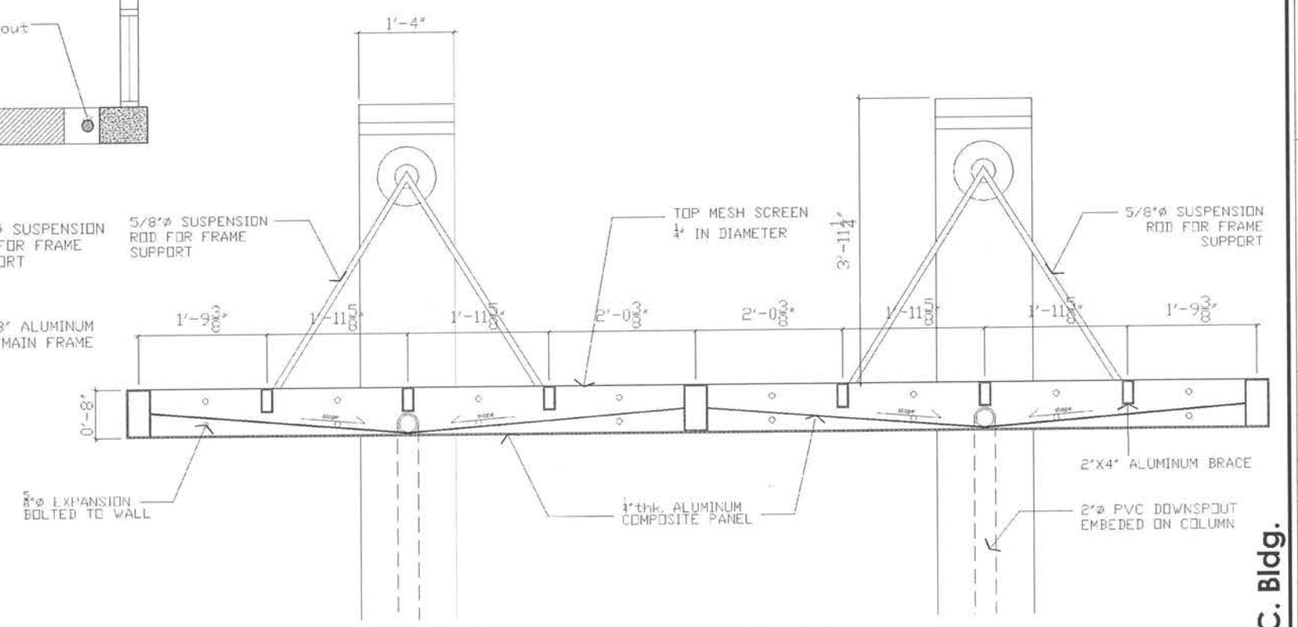

4 A509 **DETAILED SECTION OF CANOPY**
SCALE 1": 1/2"

E.O.C. Bldg.

R. S. ROQUE
ARCHITECTS
P.O. Box 6
Kolonia, POHNPEI
FSM 96941
Tel. (691) 320-2966
email add.:
archrsroque@yahoo.com
rsl_roque@yahoo.com

CONSULTANT

RYAN SALAS ROQUE
FSM NO. 002491
REGISTERED ARCHITECT

Proposed F.S.M./Office of Environment and Emergency Management Bldg.

Palikir, Pohnpei

CONTENTS
DETAILS

Approved

Approved

REVISION	BY

DATE: Feb., 2011
SCALE: AS SHOWN
DRAWN:
JOB:
SHEET
A-509

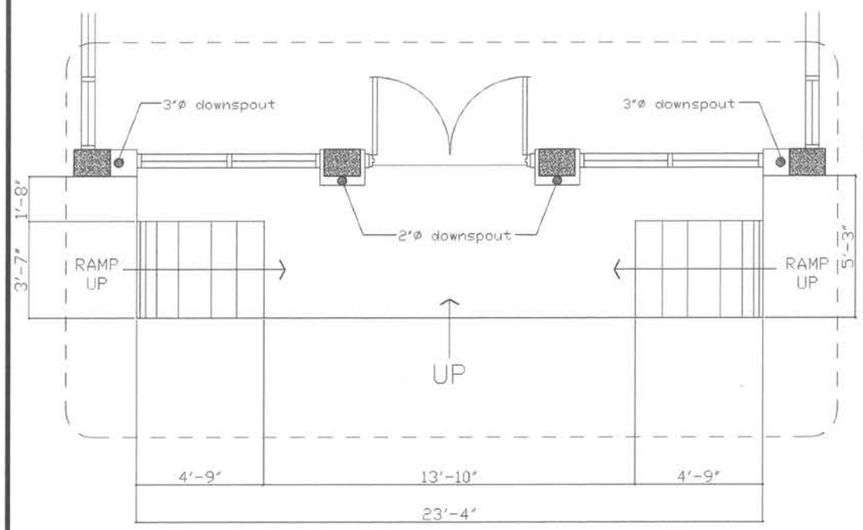

1 A509 **ENTRANCE FOYER (blow up plan)**
SCALE 1' : 3/16"

3 A509 **BLOW UP ELEVATION OF FACADE**
SCALE 1' : 1/4"

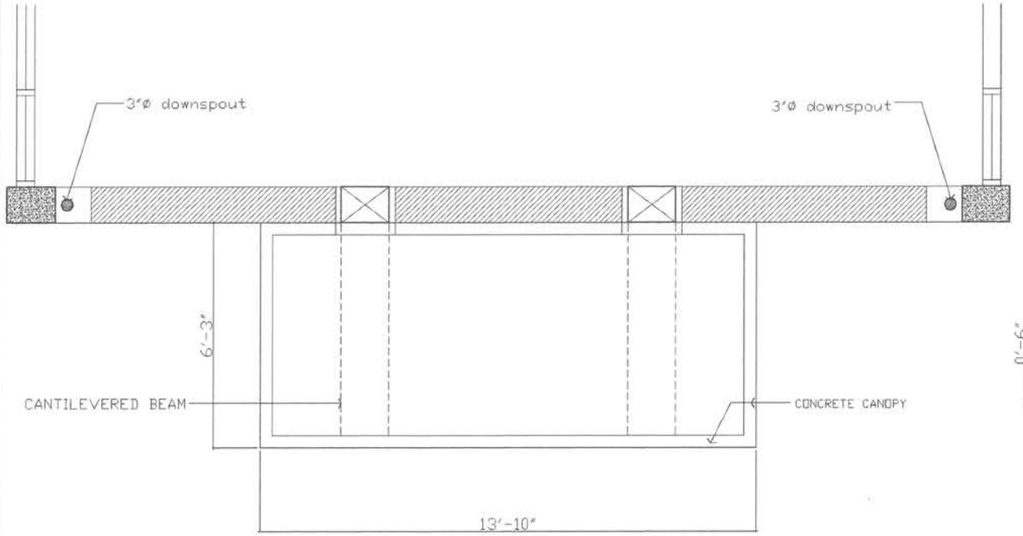

2 A509 **ROOF PLAN (blow up plan)**
SCALE 1' : 1/4"

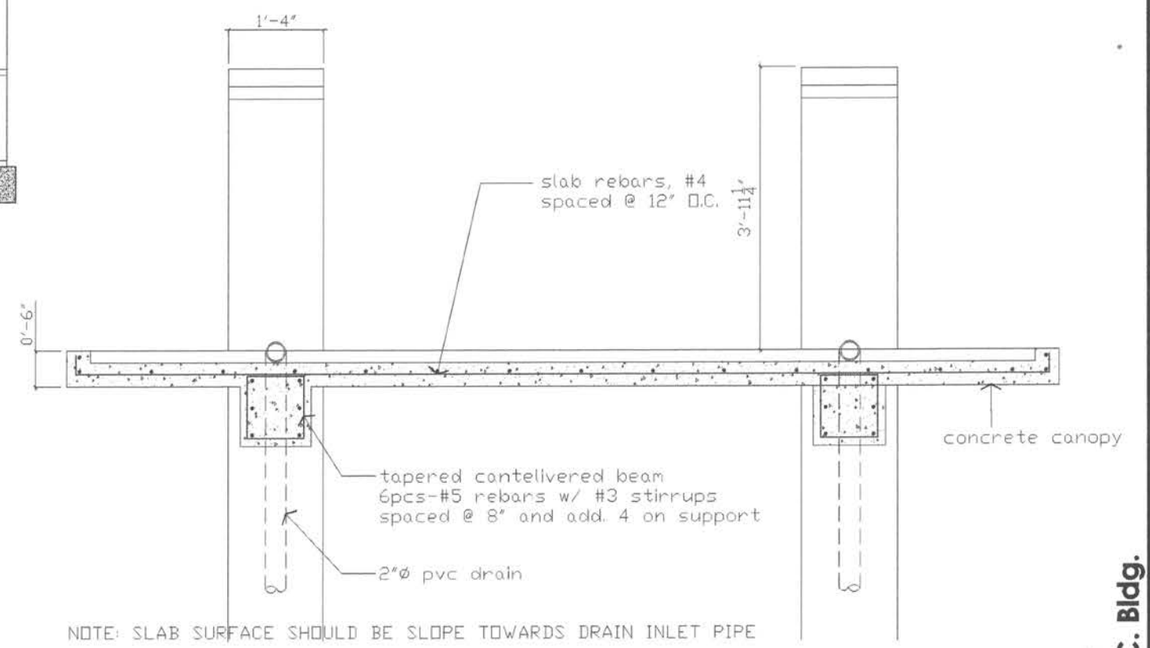

4 A509 **DETAILED SECTION OF CANOPY**
SCALE 1' : 1/2"

R. S. ROQUE
ARCHITECTS
P.O. Box 6
Kolonia, POHNPEI
FSM 96941
Tel. (691) 320-2966
email add.:
archrsroque@yahoo.com
rsl.roque@yahoo.com

CONSULTANT

RYAN SALAS ROQUE
PRC NO. 01/24015
PHILIPPINES
REGISTERED ARCHITECT

Proposed F.S.M./Office of Environment and Emergency Management Bldg.
Palikir, Pohnpei

CONTENTS
DETAILS

Approved

Approved

REVISION	BY

DATE: Feb., 2011
SCALE: AS SHOWN
DRAWN:
JOB:
SHEET
A-509

E.O.C. Bldg.

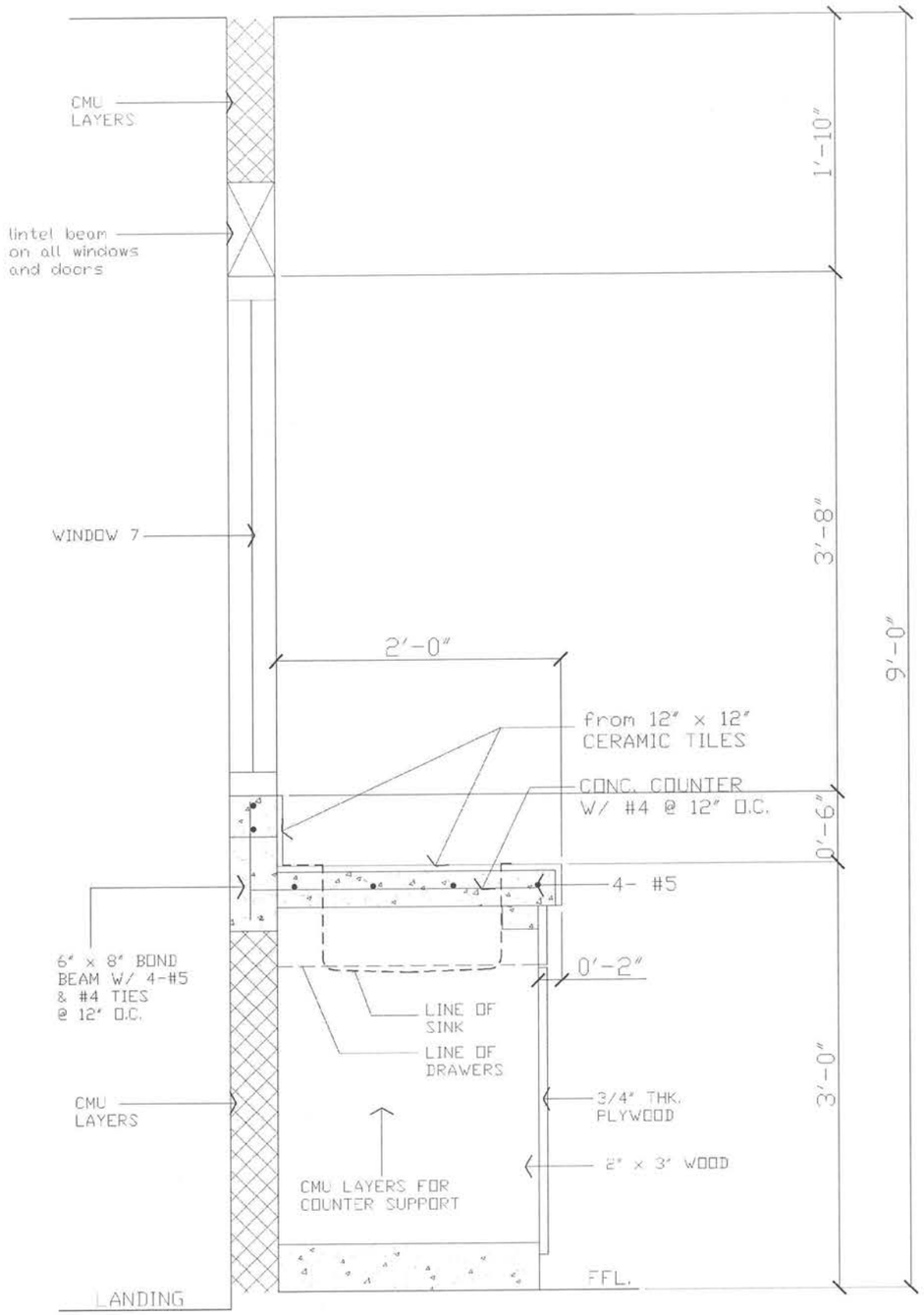

1 / A510 **DETAILED SECTION OF SINK**
SCALE 1" : 3/16"

R. S. ROQUE
ARCHITECTS
P.O. Box 6
Kolonia, POHNPEI
FSM 96941
Tel. (691) 320-2966
email add.:
archrsroque@yahoo.com
rai_roque@yahoo.com

CONSULTANT

RYAN SALAS ROQUE
FSM NO. 002401
PETITIONER
REGISTERED ARCHITECT

Proposed F.S.M./Office of Environment and Emergency Management Bldg.

Palikir, Pohnpei

CONTENTS
DETAILS

Approved

Approved

REVISION	BY

DATE: Feb., 2011
SCALE: AS SHOWN
DRAWN:
JOB:
SHEET
A-510

E.O.C. Bldg.

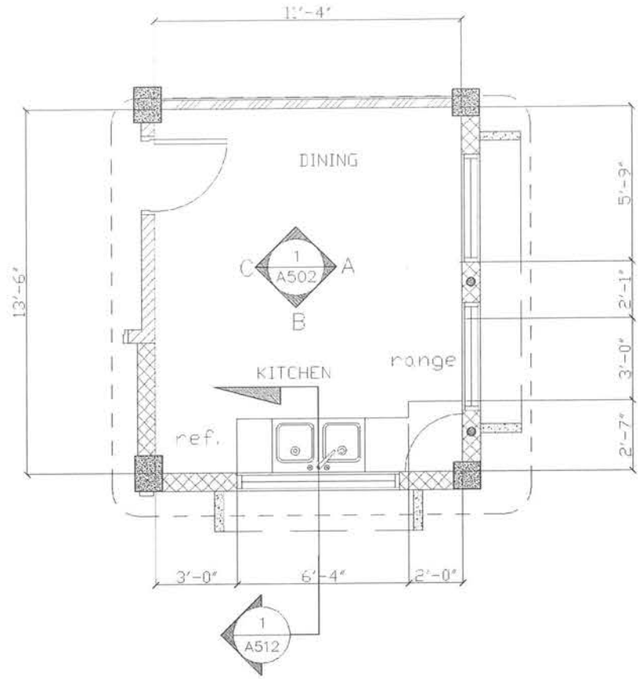

1 A511 **KITCHEN & DINING (blow up plan)**
SCALE 1" : 3/16"

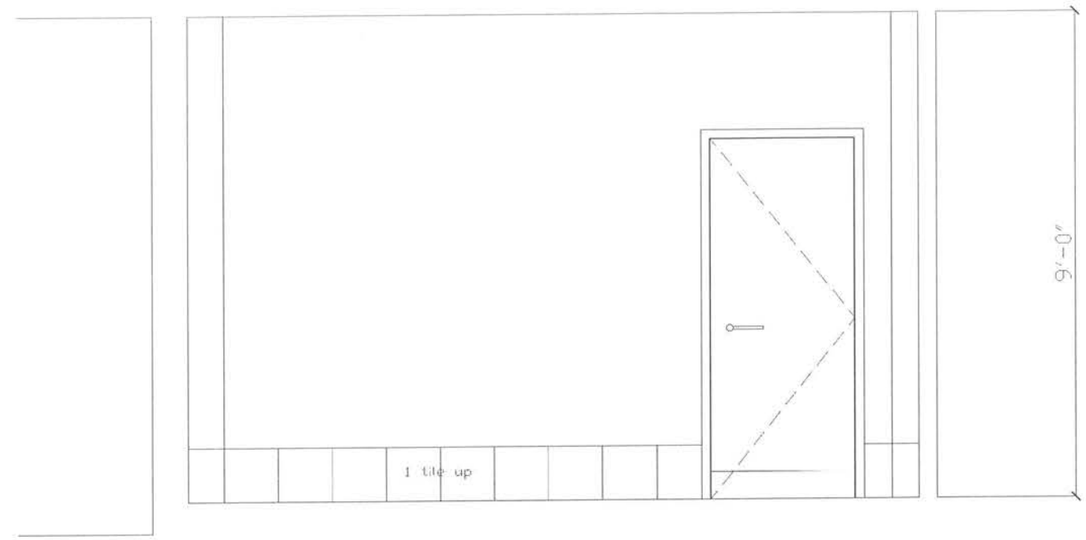

4 A511 **ELEVATION "C"**
SCALE 1" : 3/8"

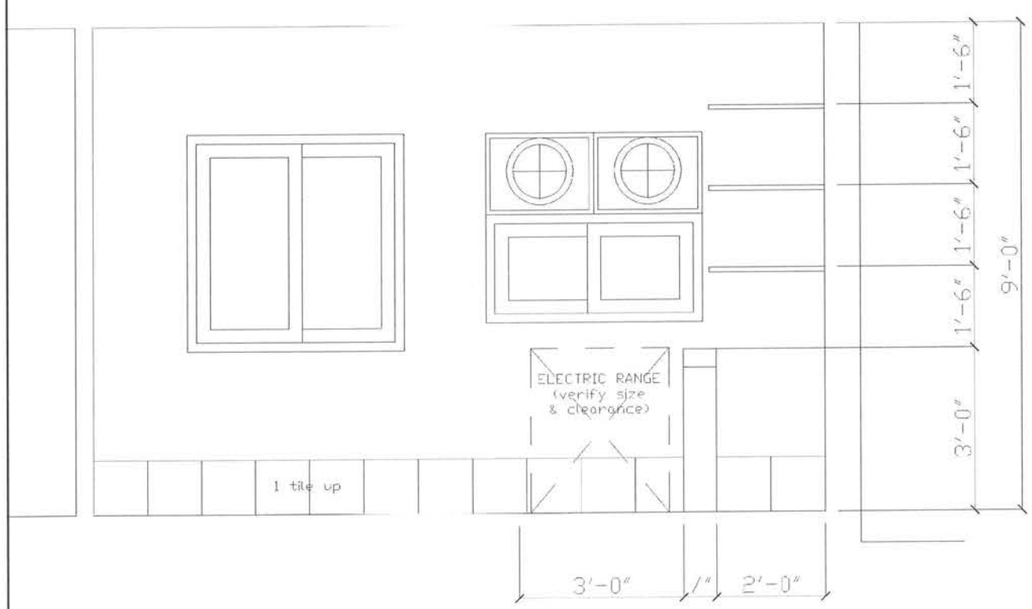

2 A511 **ELEVATION "A"**
SCALE 1" : 3/8"

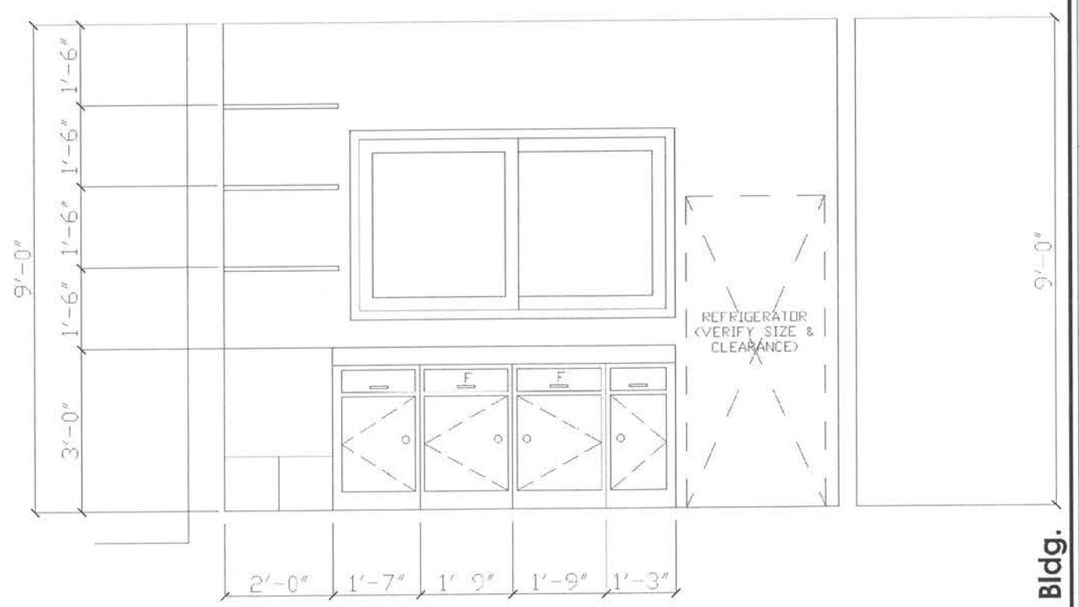

3 A511 **ELEVATION "B"**
SCALE 1" : 3/8"

E.O.C. Bldg.

R. S. ROQUE
ARCHITECTS
P.O. Box 6
Kolonia, POHNPEI
FSM 96941
Tel. (691) 320-2966
email add.:
archrsroque@yahoo.com
rai_roque@yahoo.com
CONSULTANT
RIAN SALAS ROQUE
REGISTERED ARCHITECT

Proposed F.S.M./Office of Environment and Emergency Management Bldg.

Palikir, Pohnpei

CONTENTS

BLOW UP PLANS

INT. ELEVATIONS

Approved

Approved

REVISION	BY

DATE: Feb., 2011

SCALE: AS SHOWN

DRAWN:

JOB:

SHEET

A-511