A. GENERAL NOTES :

1. CONSTRUCTION NOTES ARE TYPICAL TO ALL DRAWINGS UNLESS OTHERWISE SHOWN OR NOTED. MODIFY TYPICAL DETAILS AS DIRECTED TO MEET SPECIAL CONDITIONS.
2. SHOPDRAWINGS WITH ERECTION AND PLACING DIAGRAMS OF ALL STRUCTURAL STEEL, MISCELLANEOUS IRON, PRE-CAST CONCRETE ETC. SHALL BE SUBMITTED FOR ENGINEER'S APPROVAL BEFORE FABRICATION.
3. CONTRACTOR SHALL VERIFY ALL DIMENSIONS BEFORE ALL WORK IS TO BEGIN, CHECK WITH MECHANICAL, ELECTRICAL, AND SANITARY CONTRACTORS FOR CONDUITS, PIPE SLEEVES, ETC. TO BE EMBEDED IN CONCRETE.
4. IT SHALL BE THE CONTRACTOR'S RESPONSIBILITY TO PROVIDE ADEQUATE SHORINGS AND BRACINGS OF THE STRUCTURE FOR ALL LOADS THAT MAYBE IMPOSED DURING CONSTRUCTION.
5. THE SHORING OF EXCAVATIONS SHALL BE DONE PROPERLY IN ORDER TO PROTECT ADJACENT EXISTING BUILDINGS.
6. IN CASE OF DOUBT OR DISCREPANCY IN PLAN CONSULT AT ONCE THE STRUCTURAL ENGINEER
7. WRITTEN DIMENSIONS SHALL TAKE PRECEDENCE OVER SCALED DIMENSIONS.
8. FIELD VERIFY ALL DIMENSIONS.

B. CONCRETE AND REINFORCEMENT :

1. ALL MATERIALS AND WORKMANSHIP SHALL CONFORM WITH THE LATEST EDITION OF THE BUILDING CODE REQUIREMENTS OF AMERICAN CONCRETE INSTITUTE (ACI-318)
2. ALL CONCRETE SHALL DEVELOP A MAXIMUM COMPRESSIVE STRENGTH AT THE END OF TWENTY EIGHT (28) DAYS WITH CORRESPONDING MAXIMUM SIZE AGGREGATE AND SLUMPS AS FOLLOWS :

LOCATION	28 DAYS STRENGTH	MAXIMUM SIZE AGGREGATES	MAXIMUM SLUMP
CURBS AND SLABS ON GRADE EXCEPT FOUNDATION	2,500 Psi	1 inch	4 inches
FOUNDATION, COLUMNS AND RETAINING WALLS	3,000 Psi	3/4 inch	4 inches
BEAMS AND SUSPENDED SLABS	3,000 Psi	3/4 inch	4 inches

3. ALL REINFORCING BARS SHALL CONFORM TO ASTM A615 PNS GRADE 230 (STRUCTURAL GRADE). DEFORMATION CONFORMING TO ASTM A-305.
4. IN GENERAL, THE LATEST EDITION OF ACI-315, MANUAL OF STANDARD PRACTICE OF DETAILING REINFORCED CONCRETE STRUCTURES SHALL BE ADHERED TO, UNLESS OTHERWISE SHOWN OR NOTED.
5. MAINTAIN MINIMUM CONCRETE COVER FOR REINFORCING STEEL AS FOLLOWS :

SUSPENDED SLABS	— 3/4 inch
SLAB ON GRADE	— 1-1/2 inches
BEAMS STIRRUPS & COLUMN TIES	— 1-1/2 inches
WHERE CONCRETE IS EXPOSED TO EARTH BUT POURED AGAINST EARTH	2 inches
WHERE CONCRETE IS DEPOSITED DIRECTLY AGAINST EARTH	3 inches

6. SPLICES SHALL BE SECURELY WIRED TOGETHER AND SHALL LAP OR EXTEND IN ACCORDANCE WITH TABLE 1 (TABLE OF LAP SPLICE AND ANCHOAGE LENGTH). UNLESS OTHERWISE SHOWN ON DRAWINGS, SPLICES SHOULD BE STAGGERED WHENEVER POSSIBLE.
7. ALL ANCHOR BOLTS, DOWELS, AND OTHER INSERTS, SHALL BE PROPERLY POSITIONED AND SECURED IN PLACE PRIOR TO PLACING OF CONCRETE.
8. CONTRACTOR SHALL NOTE AND PROVIDE ALL MISCELLANEOUS CURBS, SILLS, TOOLS, EQUIPMENT AND MECHANICAL BASES THAT ARE REQUIRED BY THE ARCHITECTURAL, ELECTRICAL, PLUMBING AND MECHANICAL DRAWINGS.
9. ALL CONCRETE SHALL BE KEPT MOIST FOR A MINIMUM OF SEVEN (7) CONSECUTIVE DAYS IMMEDIATELY AFTER POURING BY THE USE OF BURLAP BAGS, FOG SPRAYING, CURING COMPOUNDS OR OTHER APPROVED METHODS.
10. STRIPPING OF FORMS AND SHORES.

FOUNDATION	— 24 HRS.
SUSPENDED SLAB EXCEPT WHEN ADDITIONAL LOADS ARE IMPOSED	14 DAYS
WALLS	— 18 HRS.
BEAMS	— 14 DAYS

11. CONSTRUCTION JOINTS IN FLOOR SLABS SHALL BE WITHIN THE MIDDLE SPAN, SAME AS WITH BEAMS AND GIRDERS UNLESS A BEAM INTERSECTS A GIRDER AT THIS POINT, IN WHICH CASE, THE JOINTS IN THE GIRDER SHALL BE OFFSET AT A DISTANCE EQUAL TO TWICE THE WIDTH OF THE BEAM.
12. NO HORIZONTAL CONSTRUCTION JOINTS SHALL BE MADE ON SLABS, BEAMS AND GIRDERS.
13. FORMS FOR BEAMS AND SLAB SHALL HAVE A CAMBER OF 1/4" PER 10 FEET OF SPAN OF FORMS, CANTILEVER BEAMS SHALL HAVE A CAMBER OF 38" PER 4 FEET OF THE CANTILEVERED SPAN.

C. FOUNDATION

1. FOUNDATION IS DESIGNED FOR AN ALLOWABLE SOIL BEARING CAPACITY OF 1,200PSF.
2. FOUNDATION SHALL REST ON NATURAL SOIL, UNLESS OTHERWISE NOTED BY THE ENGINEER. NO PART OF FOUNDATION SHALL REST ON FILL.
3. THE CONTRACTOR SHALL NOTIFY THE ENGINEER AFTER FOOTING EXCAVATION HAVE BEEN COMPLETED AND PRIOR TO CONCRETING TO CONFIRM THE DESIGN SOIL BEARING CAPACITY.
4. IN CASE ACTUAL SOIL BEARING CAPACITY IS FOUND TO BE LESS THAN THE RESULT OF THE SOIL REPORT, NOTIFY STRUCTURAL ENGINEER FOR PROPER REVISION OF FOOTING DESIGN.
5. EARTHFILL SHALL HAVE AN OPTIMUM DENSITY OF 95%.
6. A MINIMUM OF 6 INCHES TOP SOIL SHALL BE REMOVED FROM THE EXISTING GROUND. TOP SOIL SHALL NOT BE USED AS BACKFILL AND THEREFORE SHALL BE DISCARDED.

D. MASONRY AND CONCRETE BLOCKS.

1. ALL NON-LOAD BEARING TYPE CONCRETE BLOCKS SHALL HAVE A UNIT WEIGHT OF NOT MORE THAN 80pcf. FOR LOAD BEARING TYPE CONCRETE BLOCKS, A MINIMUM COMPRESSIVE STRENGTH OF 1,000Psi SHALL BE DEVELOPED.
2. PROVIDE 4 – #5ø EXTRA VERTICAL BARS AT CORNERS, INTERSECTIONS, END OF WALLS, AND EACH SIDE OF OPENINGS AS SHOWN.
3. LINTEL BEAMS OR LINTEL BLOCKS SHALL BEAR AT LEAST 8 INCHES ON EACH SIDE OF MASONRY WALL OPENINGS AS SHOWN.
4. WALL REINFORCEMENTS SHALL BE AS FOLLOWS :

WALL THICKNESS	VERTICAL REINFORCEMENTS	HORIZONTAL REINFORCEMENTS
8"	#4 @ 16 INCHES	#4 @ 24 INCHES
6"	#4 @ 24 INCHES	#4 @ 24 INCHES
4"	#4 @ 24 INCHES	#4 @ 24 INCHES

5. BLOCK WALL REINFORCING BARS SHALL BE LAPPED A MINIMUM OF 30 x BAR DIAMETER WHERE SPLICED. HORIZONTAL / VERTICAL DOWELS FROM FOOTINGS, COLUMNS / WALLS OR SLABS SHALL EXTEND INTO THE BLOCK WALL A MINIMUM OF 30 x BAR DIAMETERS OR A MINIMUM OF 16 INCHES WHICH EVER IS LONGER AND DOWELS SHOULD MATCH THE VERTICAL REINFORCEMENTS OF WALL.
6. ALL CELLS CONTAINING REINFORCING BARS OR INSERT SHALL BE SOLIDLY FILLED WITH CONCRETE GROUT. (REFER TO SPECIFICATIONS)
7. PROVIDE LINTEL BEAMS EVERY 10 FEET HEIGHT OF CHB WALL.

TABLE OF LAP SPLICES AND ANCHORAGE LENGTH

BAR DIAMETER (in)	ANCHORAGE LENGTH (in)	LAP SPLICE (in.) TENSION BARS		LAP SPLICE (in.) COMPRESSION BARS		MIN. LAP SPLICE LENGTH (in.) OF COL. REINFORCEMENTS, INDIVIDUAL BARS	
		TOP BAR	BOTTOM BAR	TOP BAR	BOTTOM BAR	W/ 1 TIE	W/ 2 TIE
#3	24	18	12	18	12	12	12
#4	24	18	12	18	12	12	12
#5	24	30	20	36	26	22	20
#6	24	36	26	44	32	26	24
#8	26	46	32	56	40	32	30
#9	32	58	42	62	44	36	34
#10	45	76	54	70	50	44	38
#11	58	96	68	80	96	48	44

E. DESIGN CRITERIA

1. ALL CONCRETE CONSTRUCTION SHALL CONFORM TO THE BUILDING CODE REQUIREMENTS OF THE ACI (AMERICAN CONCRETE INSTITUTE) CODE (LATEST EDITION), UBC (UNIFORM BUILDING CODE – LATEST EDITION) AND AISC MANUAL OF STEEL CONSTRUCTION (AMERICAN INSTITUTE OF STEEL CONSTRUCTION).
2. ALLOWABLE STRESSES :
   A. COMPRESSIVE STRENGTH OF CONCRETE AFTER 28 DAYS :
      1. COLUMN,BEAM, FOOTINGS, ETC. — f'c = 4,000 PSI
   B. REINFORCING BARS SHALL BE ASTM-A-615 WITH DEFORMATION CONFORMING TO ASTM-A-305. STRUCTURAL GRADE — fs = 18,000 PSI, fy = 40,000 PSI
3. LOADINGS :
   A. LIVE LOADS
      1. ROOF — 20 PSF
      2. GROUND FLOOR — 60 PSF
   B. DEAD LOADS
      1. CONCRETE — 150 PCF
      2. STEEL — 490 PCF
      3. WOOD (@ 18-20% MC) — 45.1 PCF
      4. 4" CHB — 49 PSF
      5. 6" CHB — 57 PSF
      6. PARTITION — 20 PSF
      7. FLOOR FINISH — 10 PSF
      8. CEILING — 10 PSF
      9. ROOF — 5 PSF
   C. WIND LOAD — 120 MPH
   D. SEISMIC LOAD — ZONE 2 REQUIREMENTS
   E. ALLOWABLE SOIL BEARING CAPACITY — 2,500 PSF

STANDARD HOOK DIMENSIONS

BAR SIZE (in)	BAR DIAMETER (in)	D	180 HOOK L	90° HOOK L
#3	3/8"	2"	4 1/2"	6 3/4"
#4	1/2"	2-1/2"	2-1/2"	5-3/4"
#5	5/8"	3-3/4"	2-1/2"	7-3/4"
#6	3/4"	4-3/4"	3"	9-1/2"
#7	7/8"	5"	4"	12"
#8	1"			

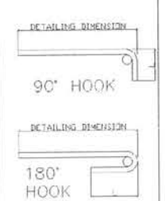

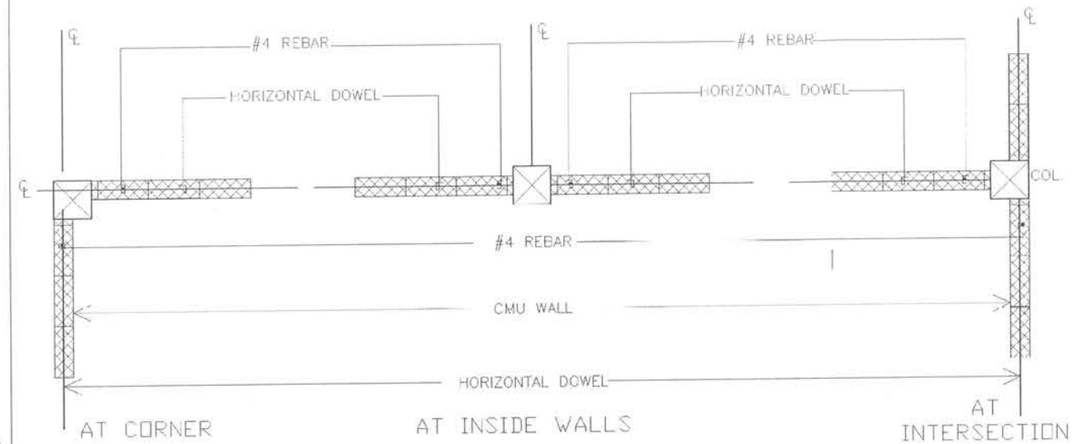

1 / S100 COLUMN-CMU CONNECTION DETAIL

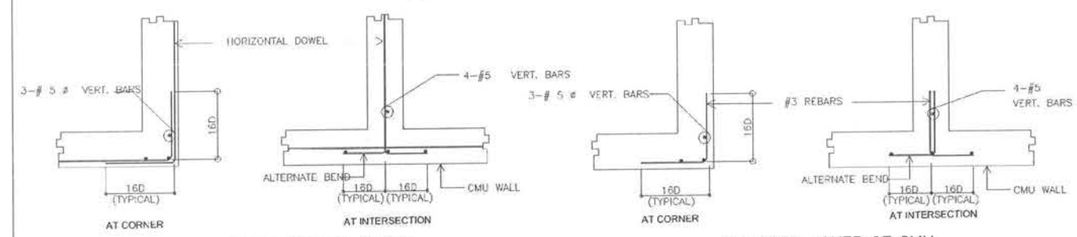

2 / S100 CMU CORNER AND INTERSECTION DETAIL

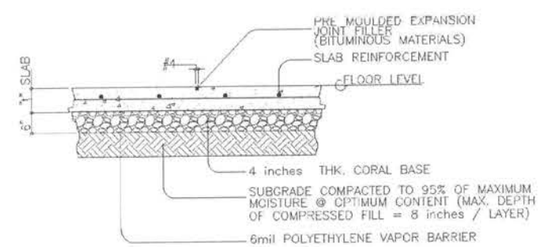

3 / S100 SLAB ON GRADE EXPANSION JOINT DETAIL

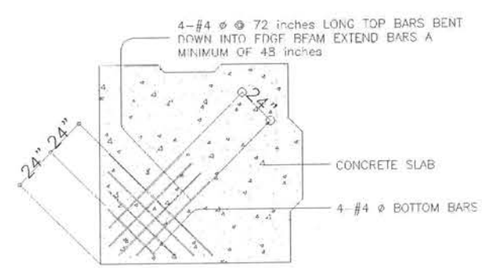

5 / S100 CORNER SLAB DETAIL

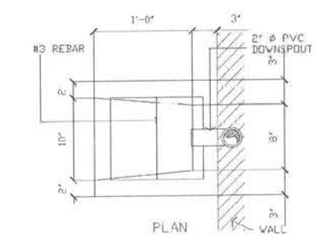

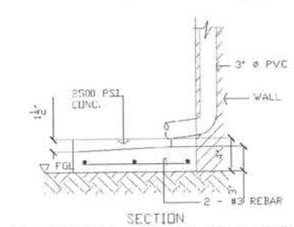

4 / S100 DETAIL OF SPLASHBLOCK

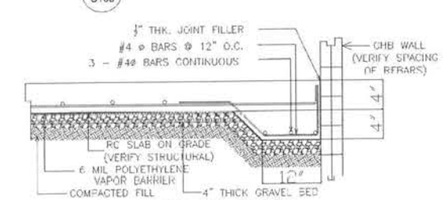

6 / S100 SLAB ON GRADE DETAIL

R. S. ROQUE
ARCHITECTS
P.O. Box 6
Kolonia, POHNPEI
FSM 96941
Tel. (691) 320-2966
email add.:
archrsroque@yahoo.com
rai_roque@yahoo.com
CONSULTANT
RYAN SALAS ROQUE
PROFESSIONAL ARCHITECT

Proposed F.S.M./Office of Environment and Emergency Management Bldg.

Palikir, Pohnpei

CONTENTS
GEN. NOTES

Approved

Approved

REVISION	BY

DATE: Feb., 2011
SCALE: AS SHOWN
DRAWN:
JOB:
SHEET
S100

E.O.C. Bldg.

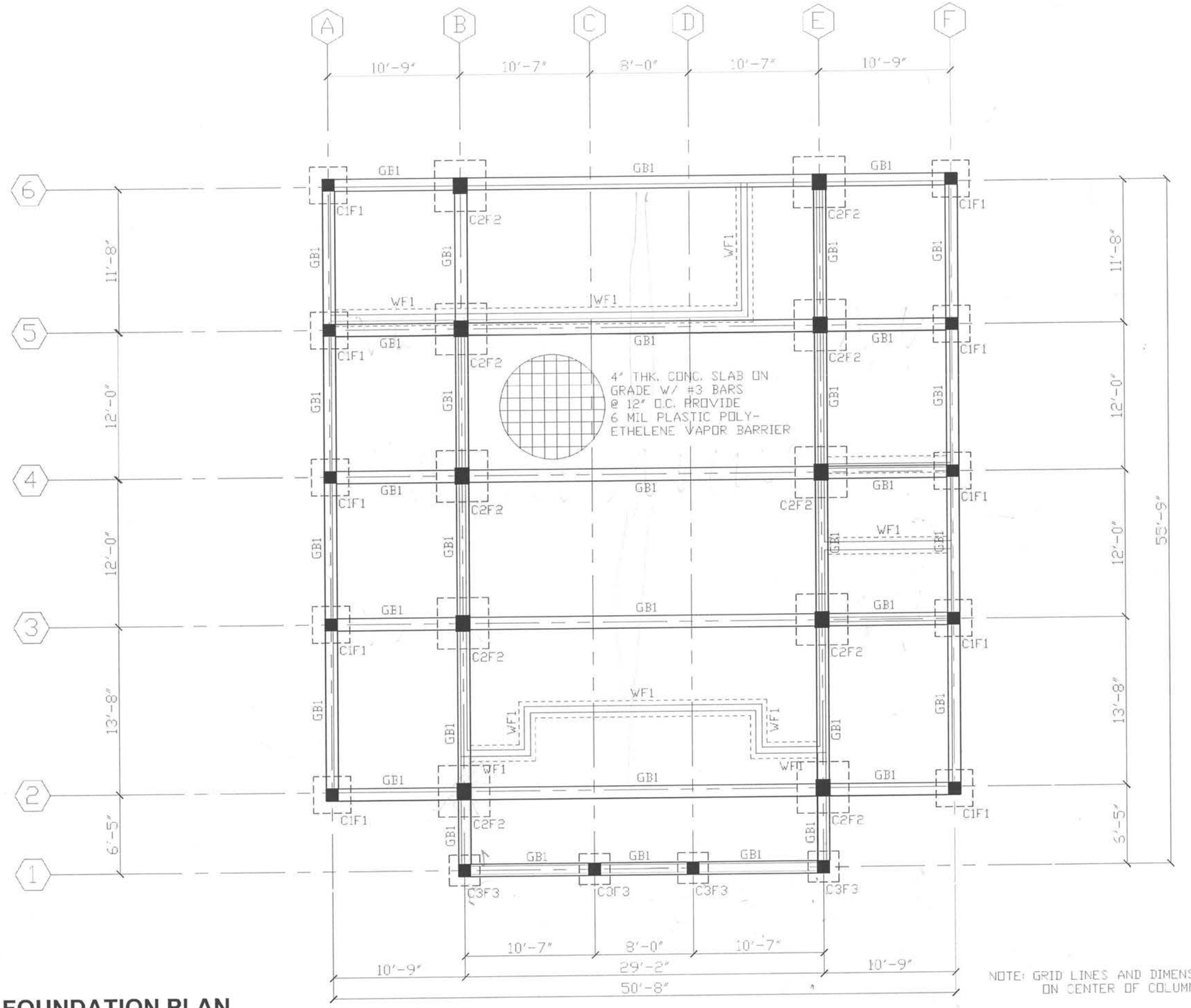

NOTE: GRID LINES AND DIMENSIONS ARE ON CENTER OF COLUMNS

1
S101

FOUNDATION PLAN

SCALE 1' = 1/8"

R. S. ROQUE
ARCHITECTS
P.O. Box 6
Kolonia, POHNPEI
FSM 96941
Tel. (691) 320-2966
email add.:
archrsroque@yahoo.com
rai_roque@yahoo.com

CONSULTANT

RYAN SALAS ROQUE
PHILIPPINES
ARCHITECTS

Proposed F.S.M./Office of Environment and Emergency Management Bldg.

Palikir, Pohnpei

CONTENTS

FOUNDATION PLAN

Approved

Approved

REVISION	BY

DATE: Feb., 2011

SCALE: AS SHOWN

DRAWN:

JOB:

SHEET

S101

E.O.C. Bldg.

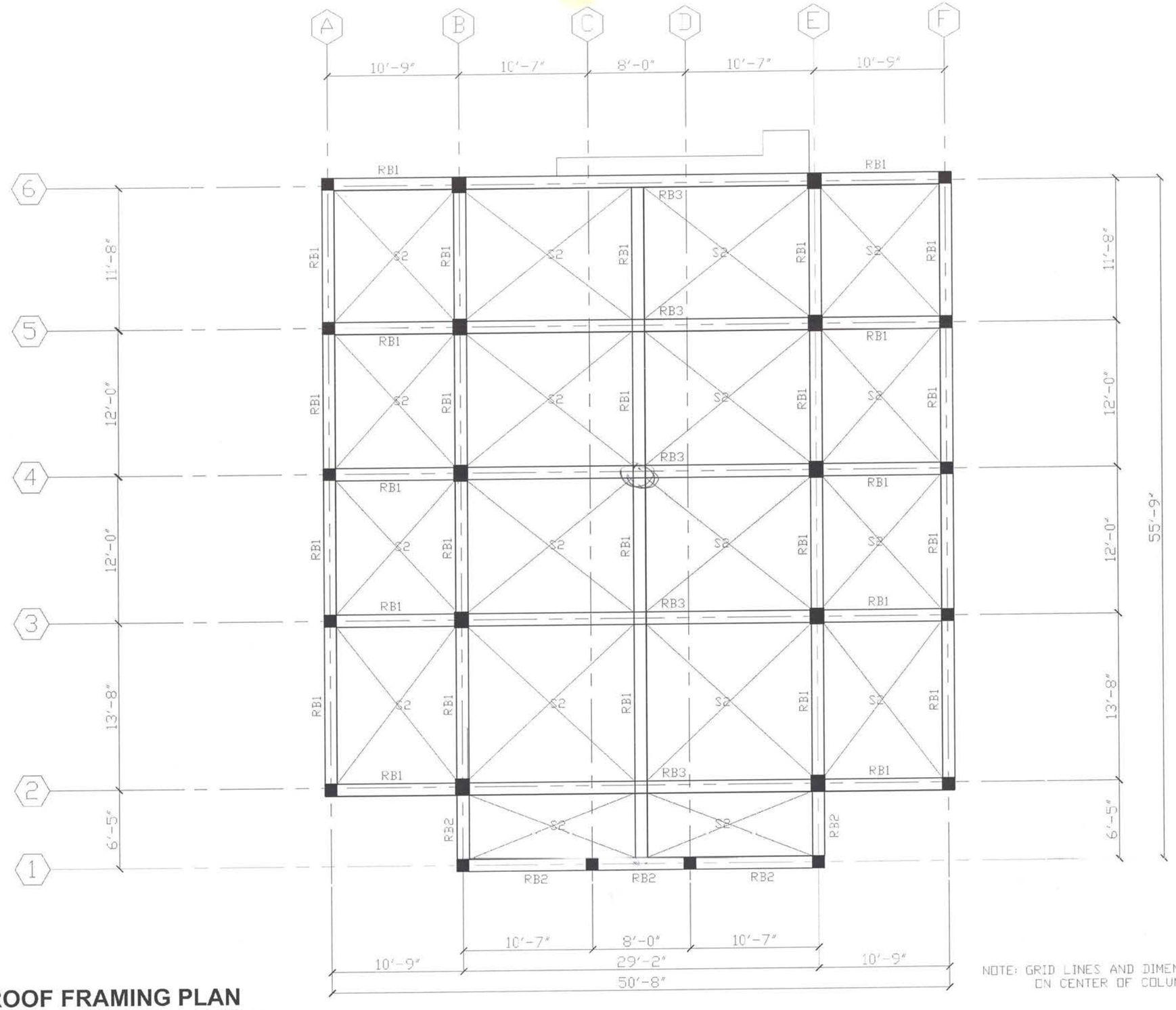

NOTE: GRID LINES AND DIMENSIONS ARE ON CENTER OF COLUMNS

1 / S102 **ROOF FRAMING PLAN**

SCALE 1' = 1/8"

R. S. ROQUE
ARCHITECTS
P.O. Box 6
Kolonia, POHNPEI
FSM 96941
Tel. (691) 320-2966
email add.:
archrsroque@yahoo.com
rsl_roque@yahoo.com

CONSULTANT

RYAN SALAS ROQUE
PHILIPPINES
REGISTERED ARCHITECT

Proposed F.S.M./Office of Environment and Emergency Management Bldg.

Palikir, Pohnpei

CONTENTS

ROOF FRAMING PLAN

Approved

Approved

REVISION	BY

DATE: Feb., 2011

SCALE: AS SHOWN

DRAWN:

JOB:

SHEET

S102

E.O.C. Bldg.

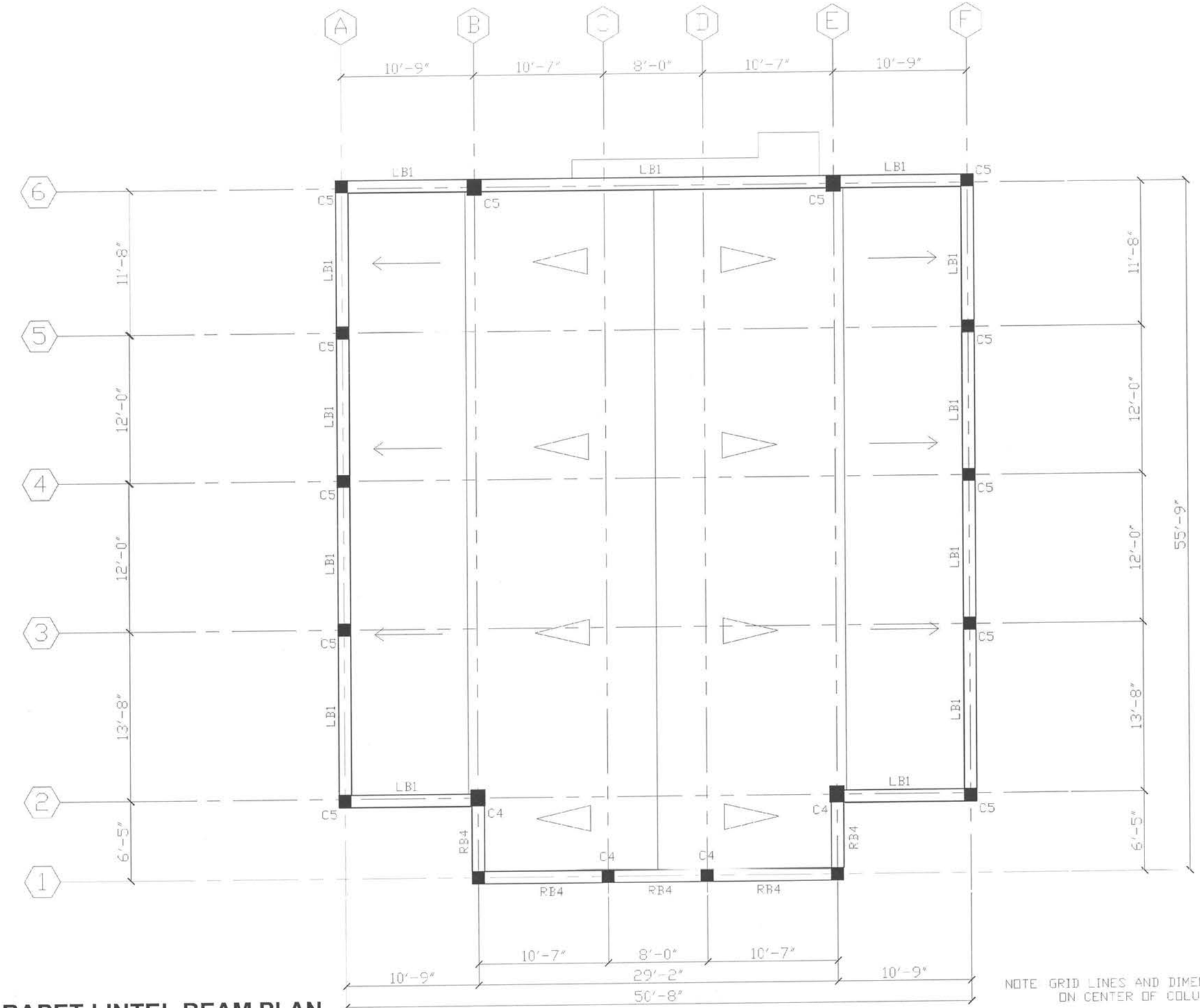

NOTE: GRID LINES AND DIMENSIONS ARE ON CENTER OF COLUMNS

1 S103 **PARAPET LINTEL BEAM PLAN**

SCALE 1' = 1/8"

E.O.C. Bldg.

R. S. ROQUE
ARCHITECTS
P.O. Box 6
Kolonia, POHNPEI
FSM 96941
Tel. (691) 320-2966
email add.:
archrsroque@yahoo.com
ral_roque@yahoo.com

CONSULTANT

RYAN SALAS ROQUE
PRC NO 0000401
PHILIPPINES
REGISTERED ARCHITECT

Proposed F.S.M./Office of Environment and Emergency Management Bldg.

Palikir, Pohnpei

CONTENTS

PARAPET ROOF PLAN

Approved

Approved

REVISION	BY

DATE: Feb., 2011

SCALE: AS SHOWN

DRAWN:

JOB:

SHEET

S103

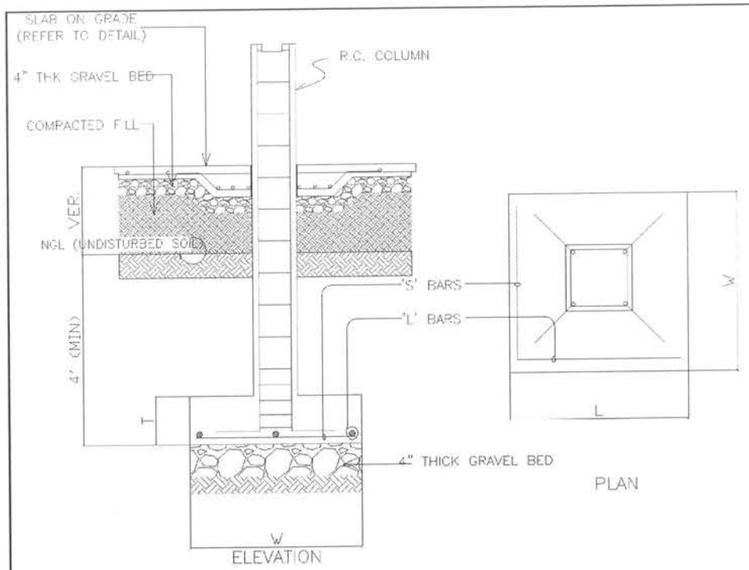

1 S104 TYPICAL FOOTING DETAIL

SCHEDULE OF SLABS

SLAB MARK	t (in.)	Bars along Short Span (sq.in.)	Bars along Long Span (sc.in.)	REMARKS
S1	4"	#3 @ 10" MAIN BARS	#3 @ 12" TEMP BARS	1-WAY
S2	5"	#4 @ 8" BENT UP 2 OF 3 W/ #4 @ 10" EXTRA TOP BAR @ DISCONTINOUS EDGE	#4 @ 10" BENT UP 2 OF 3 W/ #4 @ 12" EXTRA TOP BAR @ DISCONTINOUS EDGE	2-WAY

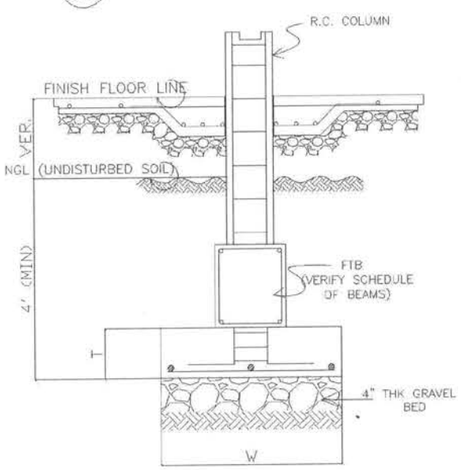

2 S104 TYPICAL FOOTING TIE BEAM DETAIL

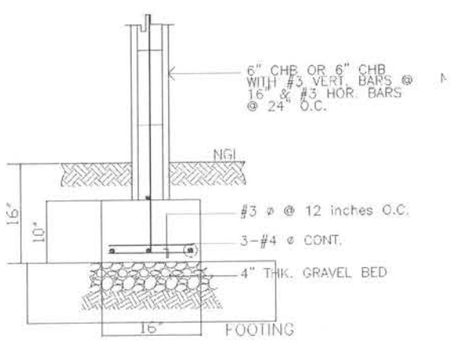

3 S104 WALL FOOTING (WF-I) DETAIL

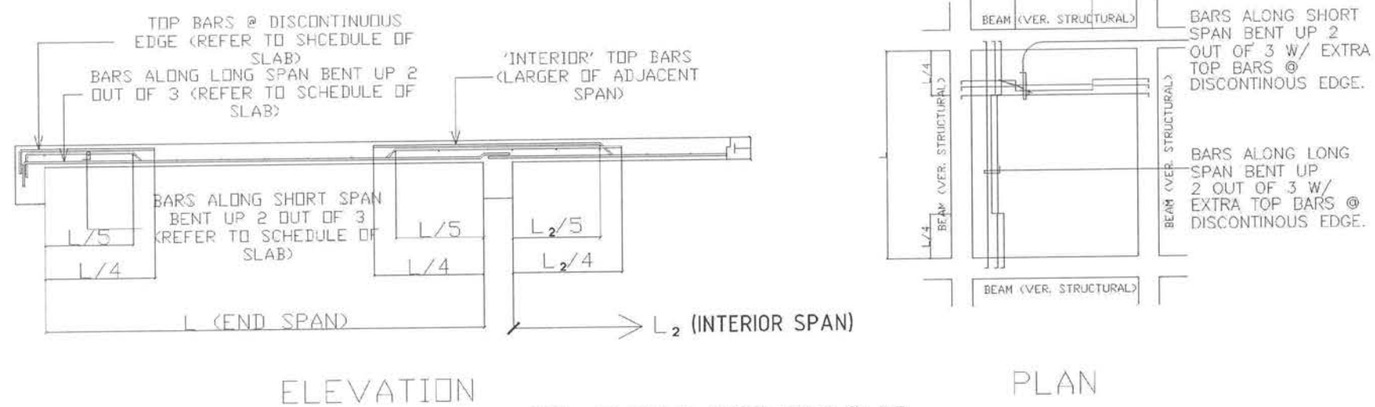

4 S104 TYPICAL TWO WAY SLAB REINFORCEMENT DETAIL

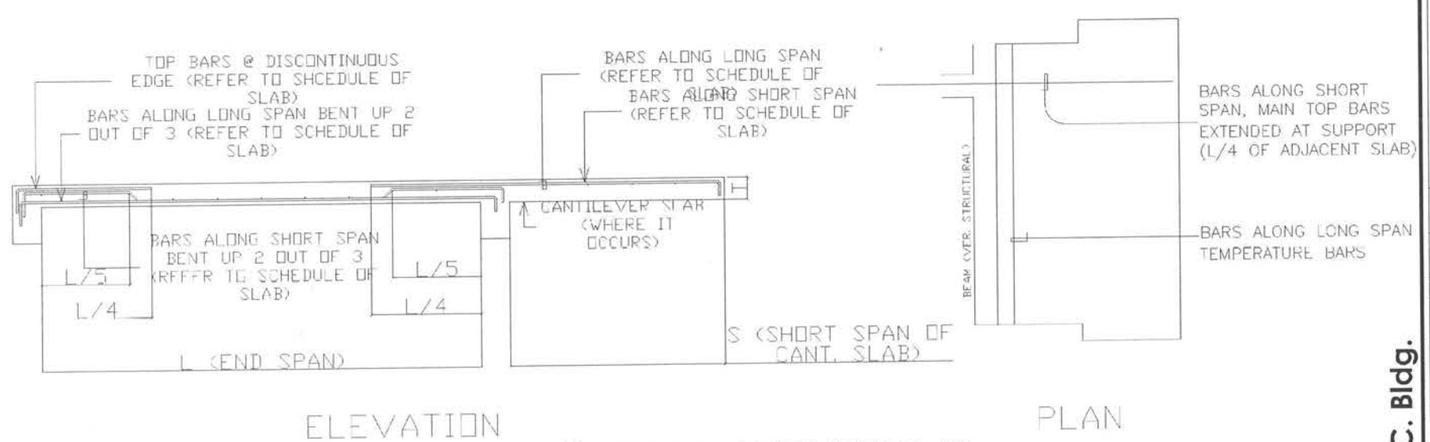

5 S104 TYPICAL CANTILEVER SLAB REINFORCEMENT DETAIL

R. S. ROQUE
ARCHITECTS
P.O. Box 6
Kolonia, POHNPEI
FSM 96941
Tel. (691) 320-2966
email add.:
archrsroque@yahoo.com
ral_roque@yahoo.com
CONSULTANT
RYAN SALAS ROQUE
PSC NO 092401
PHILIPPINES
REGISTERED ARCHITECT

Proposed F.S.M./Office of Environment and Emergency Management Bldg.
Palikir, Pohnpei

CONTENTS
SCHEDULES
DETAILS

Approved
Approved

REVISION	BY

DATE: Feb., 2011
SCALE: AS SHOWN
DRAWN:
JOB:
SHEET
S104

E.O.C. Bldg.

SCHEDULE OF COLUMNS

COLUMN MARK	FOOTING TO ROOF
C1	12" × 12" 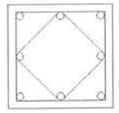 8 – #5 VERTICAL BARS WITH #3 TIES 1 @ 2",2 @ 4", REST @ 8"
C2	14" × 18" 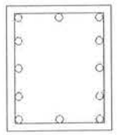 12 – #5 VERTICAL BARS WITH #3 TIES 1 @ 2",2 @ 4", REST @ 8"
C3	12" × 12" 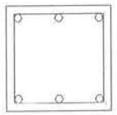 6 – #5 VERTICAL BARS WITH #3 TIES 1 @ 2",2 @ 4", REST @ 8"
C4	10" × 10" 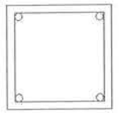 4 – #5 VERTICAL BARS WITH #3 TIES 1 @ 2",2 @ 4", REST @ 8"
C5	8" × 10" 4 – #5 VERTICAL BARS WITH #3 TIES 1 @ 2",2 @ 4", REST @ 6"

NOTE: Fc' = 4,000psi
Compaction requirement @ base/subbase course is 95% compaction density.

SCHEDULE OF BEAMS

BEAM MARK	B X H in x in.	Bars at Support		Bars at Midspan		#3 dia. Ties/Stirrups Spacing	BAR ARRANGEM'T	
		Top	Bottom	Top	Bottom		SUPPORT	MIDSPAN
GB–1	12" X 12"	3–#5	3–#5			1 @ 2" 2 @ 4" Rest @ 8"	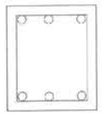	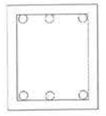
RB–1	12" X 14"	5–#5	3–#5	3–#5	5–#5	1 @ 2" 2 @ 4" Rest @ 8"	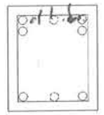	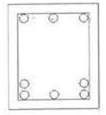
RB–2	12" X 12"	4–#5	2–#5	2–#5	4–#5	1 @ 2" 2 @ 4" Rest @ 8"	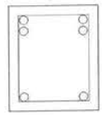	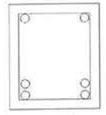
RB–3	12" X 22"	8–#5	6–#5	6–#5	8–#5	1 @ 2" 2 @ 4" Rest @ 8"	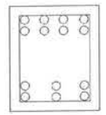	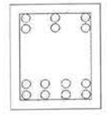
RB–4	10" X 10"	2–#5	2–#5			1 @ 2" 2 @ 4" Rest @ 8"	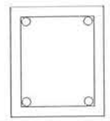	
LB–1	8" X 10"	2–#4	2–#4			1 @ 2" 2 @ 4" Rest @ 8"	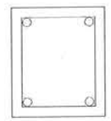	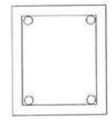

SCHEDULE OF FOOTINGS

FOOTING MARK	L	W	T	'S' BARS	'L' BARS	REMARKS
F1	3'–0"	3'–0"	12"	6 – #5	6 – #5	SQUARE
F2	4'–2"	4'–2"	1'8"	12 – #5	12 – #5	SQUARE
F3	2'–6"	2'–6"	12"	5 – #5	5 – #5	SQUARE

R. S. ROQUE
ARCHITECTS
P.O. Box 6
Kolonia, POHNPEI
FSM 96941
Tel. (691) 320-2966
email add.:
archeroque@yahoo.com
rai_roque@yahoo.com
CONSULTANT
RYAN SALAS ROQUE
PHILIPPINES
REGISTERED ARCHITECT

Proposed F.S.M./Office of Environment and Emergency Management Bldg.
Palikir, Pohnpei

E.O.C. Bldg.

CONTENTS
SCHEDULES

Approved

Approved

REVISION	BY

DATE: Feb., 2011
SCALE: AS SHOWN
DRAWN:
JOB:
SHEET
S105

1 GENERAL NOTES & SPECIFICATIONS
EE-1

1. ALL ELECTRICIAN WORKS SHALL BE DONE ACCORDING TO THE APPLICABLE SECTIONS OF THE NATIONAL ELECTRICAL CODE (NEC) 1993, RULES & REGULATIONS OF THE DEPARTMENT OF PUBLIC WORKS, LOCAL POWER AUTHORITY, & TELEPHONE AUTHORITY.
2. ALL EQUIPMENT & MATERIALS SHALL BE IN U.L. LISTED WHERE LISTING IS AVAILABLE FOR THAT TYPE OF EQUIPMENT OR CONFORMS TO ANSI OR NEMA STANDARDS.
3. WORKMANSHIP SHALL CONFORM TO CONSTRUCTION PRACTICES RECOMMENDED BY THE AMERICAN ELECTRICIANS HANDBOOK BY CROFT (LATEST EDITION) & SHALL BE SUBJECTED TO THE APPROVAL OF THE AGENCY WHO HAS THE JURISDICTION & THE ENGINEER.
4. ANY DEVICE MAY RELOCATED WITHIN TEN FEET OF THE LOCATION SHOWN ON THE DRAWING PRIOR TO INSTALLATION AT THE DIRECTION OF THE ENGINEER & AT NO ADDITIONAL COST TO THE OWNER.
5. METALLIC ENCLOSURES, RACEWAYS & ELECTRICAL EQUIPMENT SHALL BE GROUNDED ACCORDING TO THE REQUIREMENTS OF NEC ARTICLE 250, PROVIDE GROUND WIRE IN EVERY RACEWAYS. SIZE ACCORDING TO NEC TABLE 250-95. OBTAIN & PAY FOR PERMITS & ARRANGE & PAY FOR CONSTRUCTION UTILITIES.
6. COORDINATE WITH THE MECHANICAL CONTRACTOR FOR EQUIPMENT REQUIREMENTS & PROVIDE ALL WIRING & PROTECTION EQUIPMENT REQUIRED.
7. CONDUIT SHALL BE EMT (DRY LOCATIONS CONCEALED ABOVE GRADE), PVC ENCASED IN CONCRETE & BELOW GRADE, ALUMINUM (EXPOSED INSTALLATION) FLEXIBLE CONDUIT SHALL BE JACKETED TYPE & ACCORDING TO NEC ARTICLE 350.
8. WIRING SHALL BE NEC TYPE THWN, THHN, OR XHHW, 600 V. CONDUCTORS SHALL BE COPPER.
9. PANEL BOARD SHALL BE COMPLETE WITH BUS, ENCLOSURE & TRIM, COMPLETE OF MOLDED PLASTIC CASE CIRCUIT BREAKERS (BOLT ON TYPE), WITH RATINGS AS INDICATED & COMPLETE TYPE CIRCUIT DIRECTORY.
10. TEST. TEST IN THE PRESENCE OF ENGINEER RESULTS SUBMITTED FOR APPROVAL BY THE ENGINEER.
    a. OPERATION TEST
    b. INSULATION RESISTANCE TEST
    c. GROUND RESISTANCE TEST
11. ANY DISCREPANCY IN LOCATIONS & RATINGS OF EQUIPMENT & APPARATUS SHALL BE VERIFIED WITH THE OWNER OR ANY OF HIS REPRESENTATIVES & CHANGES SHALL BE MADE ACCORDINGLY.
12. FOR EACH SPARE BRANCH CIRCUIT IN PANEL BOARD PROVIDE 3/4"Ø EMPTY CONDUIT TERMINATED TO 4" OCTAGONAL BOX ABOVE CEILING.
13. PROVIDE GA. 16 G.I. PULL WIRES IN ALL SPARE DUCT & EMPTY CONDUITS.

2 LEGEND & SYMBOLS
EE-1

- 2PCS - 20 WATTS X 2FT LONG 110 volts FLOURESCENT LIGHT W/ HOUSING
- 2 x 40 WATTS X 4FT LONG 110 volts FLOURESCENT LIGHT W/ HOUSING
- COMPACT FLOURESCENT LIGHT 50WATTS (110 VOLTS)
- WBL — WALL BRACKET LIGHT, 1 DESIGN FOR EXTERIOR, 1 DESIGN FOR INTERIOR. 2 BULBS FOR DOWNLIGHT AND UPLIGHT
- CHANDELIER (110 VOLTS)
- 8" EXHAUST FAN (110 VOLTS)
- CF — FAN SWITCH (CEILING FAN CONTROLLER), 48" AFF
- DUPLEX RECEPTACLES, FLUSH MOUNTED IN WALLS, 18" AFF NATIONAL MODEL WEG15829, PLATE COVER MODEL WEG6803W-1
- TELEPHONE OUTLET, MODULAR JACK FLUSH MOUNTED WITH DEVICE PLATE, 18" AFF
- GFI — 3'-4" AFF GROUND FAULT INTERRUPTER DUPLEX RECEPTACLES, FLUSH MOUNTED IN WALLS NATIONAL MODEL WN1741-851, PLATE COVER MODEL WEG7903
- CABLE TV OUTLET, MODULAR JACK FLUSH MOUNTED WITH DEVICE PLATE, 18" AFF
- REF — 3'-4" AFF REFRIGERATOR OUTLET FLUSH MOUNTED ON WALLS NATIONAL MODEL WEG15829, PLATE COVER MODEL WEG6803W-1
- R — 3'-4" AFF RANGE OUTLET FLUSH MOUNTED ON WALLS NATIONAL MODEL WEG15829, PLATE COVER MODEL WEG6803W-1
- PP — POWER PANELBOARD, SURFACE MOUNTED, 66" FLOOR TO TOP
- PAC — PANELBOARD AIRCON, SURFACE MOUNTED, 66" FLOOR TO TOP
- MDP — MAIN DISTRIBUTION PANEL, SURFACE MOUNTED, 66" FLOOR TO TOP
- 1 — HOMERUN TO PANEL, DENOTES CIRCUIT NUMBER
- M — KILOWATT HOUR METER WITH DEMAND REGISTER, 66" AFF
- SERVICE DROP BY UTILITY COMPANY
- LOW VOLTAGE CIRCUIT BREAKER
- COPPER GROUND ROD 5/8"Ø x 10FT.
- S — SMOKE DETECTOR-BATTERY OPERATED
- GFI — GROUND-FAULT CIRCUIT INTERRUPTER
- GB — GROUND BUSBAR
- TPB — TELEPHONE PULLBOX
- CT — CURRENT TRANSFORMER
- 150VA CEILING FAN
- ACCU MOTOR, MOUNTED ON CONCRETE PAD
- FCU — FAN COIL UNIT
- S_a — LIGHT SWITCH, 1-POLE, 1-GANG FLUSH MOUNTED, 48" AFF
- S_{ab} — LIGHT SWITCH, 2-POLE ON TWO GANG, 48" AFF
- S_{abc} — LIGHT SWITCH, 3-POLE ON THREE GANG, 48" AFF

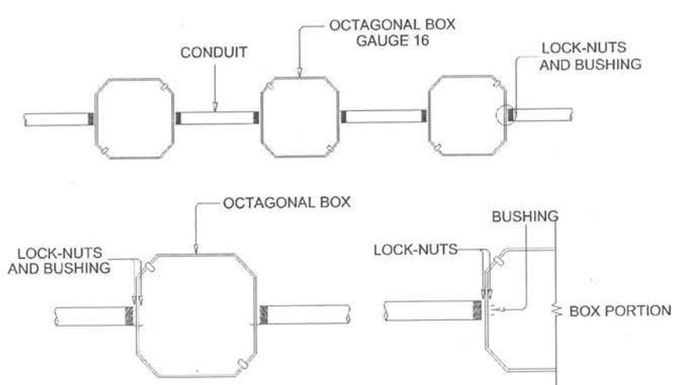

3 CONDUIT ON BOX INSTALLATION DETAIL
EE-1

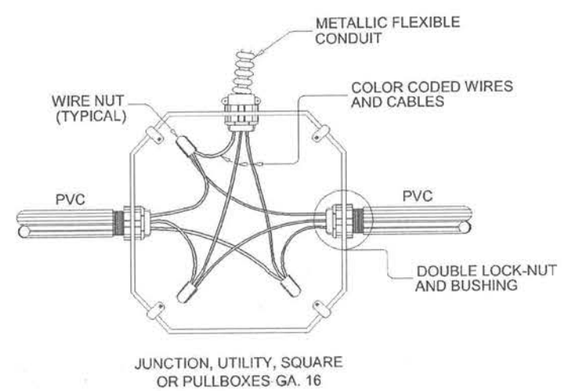

4 BOX CONNECTION DETAIL
EE-1

5 VICINITY MAP
EE-1

R. S. ROQUE
ARCHITECTS
P.O. Box 6
Kolonia, POHNPEI
FSM 96941
Tel. (691) 320-2906
email add.:
archrsroque@yahoo.com
ral_roque@yahoo.com
CONSULTANT

Proposed F.S.M./Office of Environment and Emergency Management Bldg.
Palikir, Pohnpei

CONTENTS

GENERAL NOTES & SPECIFICATIONS
LEGEND & SYMBOLS
CONDUIT ON BOX INSTALLATION DET.
BOX CONNECTION

Approved

Approved

REVISION	BY

DATE: Feb., 2011
SCALE: AS SHOWN
DRAWN:
JOB:
SHEET
EE-1

E.O.C. Bldg.

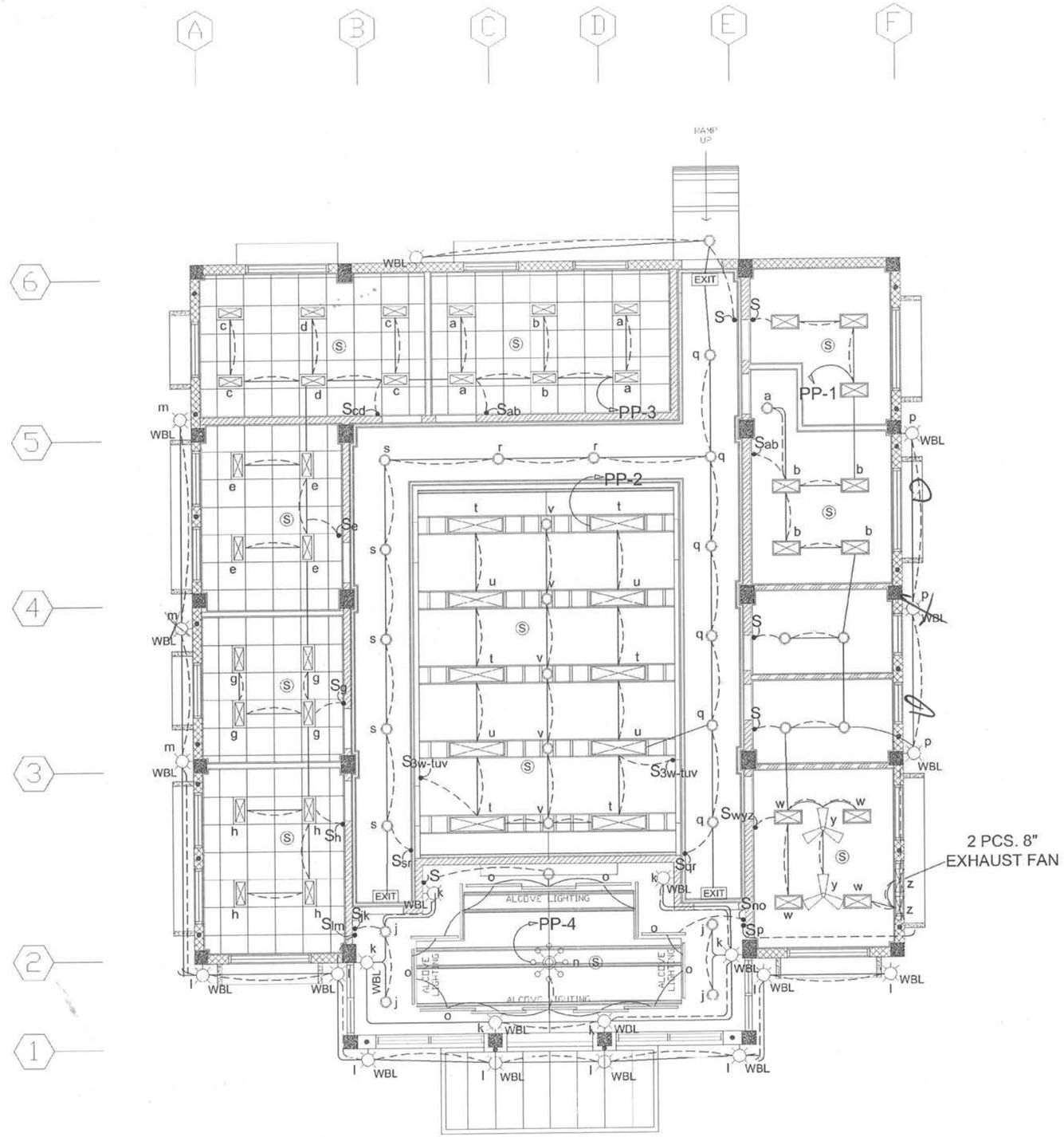

LIGHTING LAYOUT

R. S. ROQUE
ARCHITECTS
P.O. Box 6
Kolonia, POHNPEI
FSM 96941
Tel. (691) 320-2966
email add.:
archrs roque@yahoo.com
rai_roque@yahoo.com

CONSULTANT

Proposed F.S.M./Office of Environment and Emergency Management Bldg.

Palikir, Pohnpei

CONTENTS
LIGHTING LAYOUT

Approved

Approved

REVISION	BY

DATE: Feb., 2011
SCALE: AS SHOWN
DRAWN:
JOB:
SHEET
EE-2

E.O.C. Bldg.

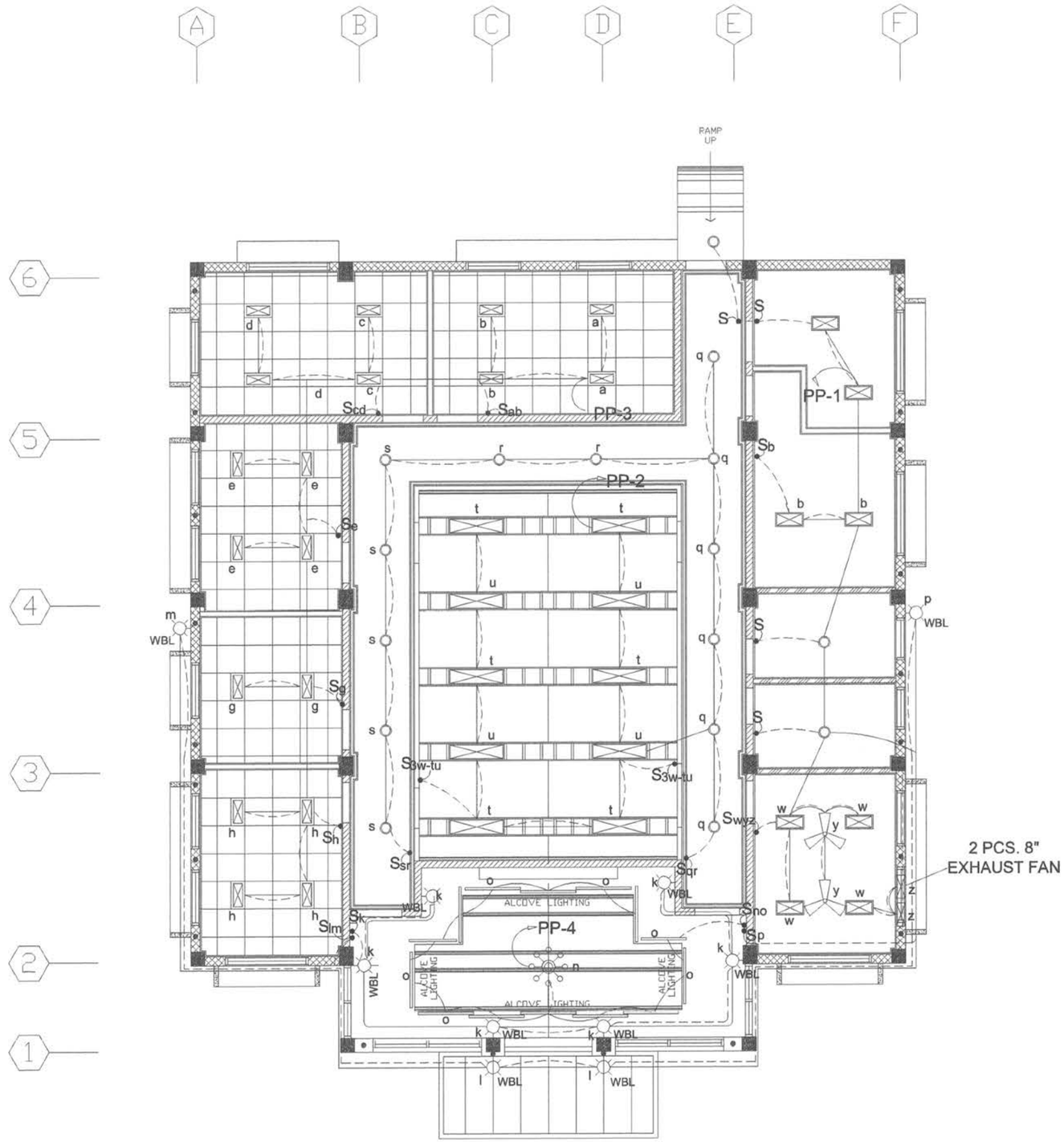

LIGHTING LAYOUT

R. S. ROQUE
ARCHITECTS
P.O. Box 5
Kolonia, POHNPEI
FSM 96941
Tel. (691) 320-2966
email add.:
archrsroque@yahoo.com
rsi_roque@yahoo.com

CONSULTANT

Proposed F.S.M./Office of Environment and Emergency Management Bldg.

Palikir, Pohnpei

CONTENTS
LIGHTING LAYOUT

Approved

Approved

REVISION	BY

DATE: Feb., 2011
SCALE: AS SHOWN
DRAWN:
JOB:
SHEET
EE-2

E.O.C. Bldg.

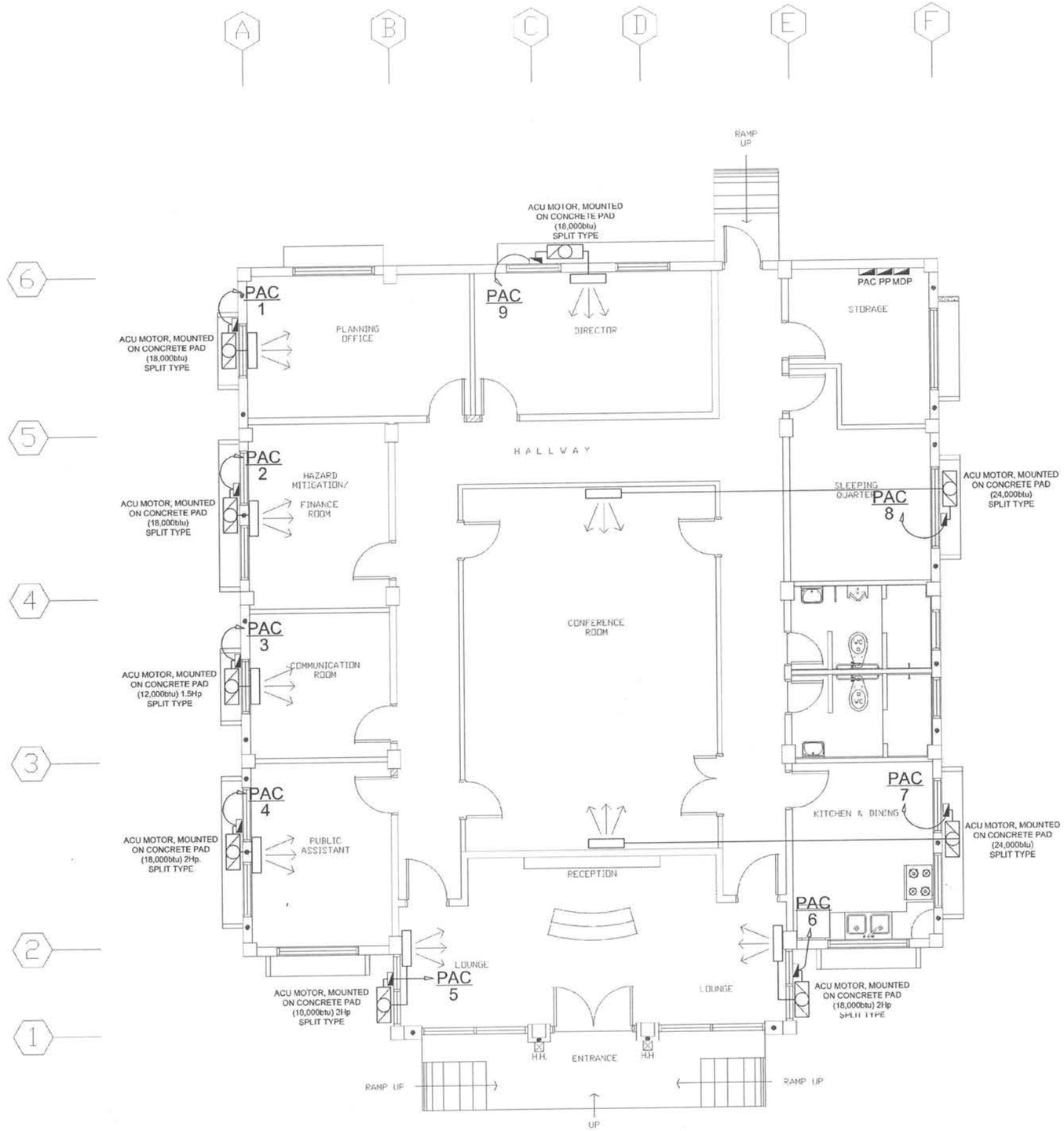

AIRCON LAYOUT

R. S. ROQUE
ARCHITECTS
P.O. Box 6
Kolonia, POHNPEI
FSM 96941
Tel. (691) 320-2966
email add.:
archrsroque@yahoo.com
rai_roque@yahoo.com

CONSULTANT

Proposed F.S.M./Office of Environment and Emergency Management Bldg.

Palikir, Pohnpei

CONTENTS

AIRCON LAYOUT

Approved

Approved

REVISION	BY

DATE: Feb., 2011

SCALE: AS SHOWN

DRAWN:

JOB:

SHEET

EE-3

E.O.C. Bldg.

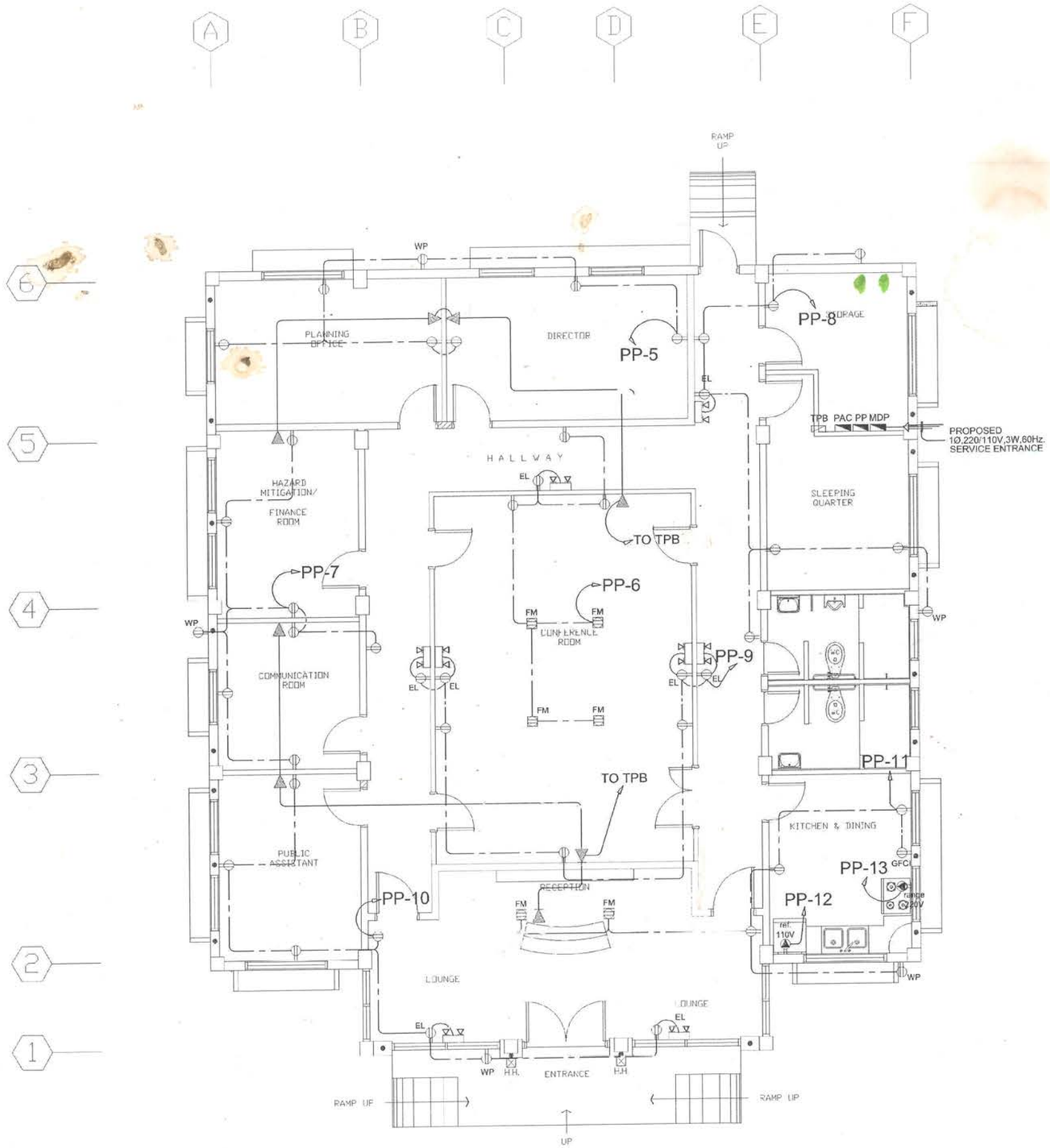

POWER & AUXILIARY

R. S. ROQUE
ARCHITECTS
P.O. Box 5
Kolonia, POHNPEI
FSM 96941
Tel. (691) 320-2966
email add.:
archrsroque@yahoo.com
ral_roque@yahoo.com

CONSULTANT

Proposed F.S.M./Office of Environment and Emergency Management Bldg.

Palikir, Pohnpei

CONTENTS

POWER AND AUX. LAYOUT

Approved

Approved

REVISION	BY

DATE: Feb., 2011

SCALE: AS SHOWN

DRAWN:

JOB:

SHEET

EE-4

E.O.C. Bldg.

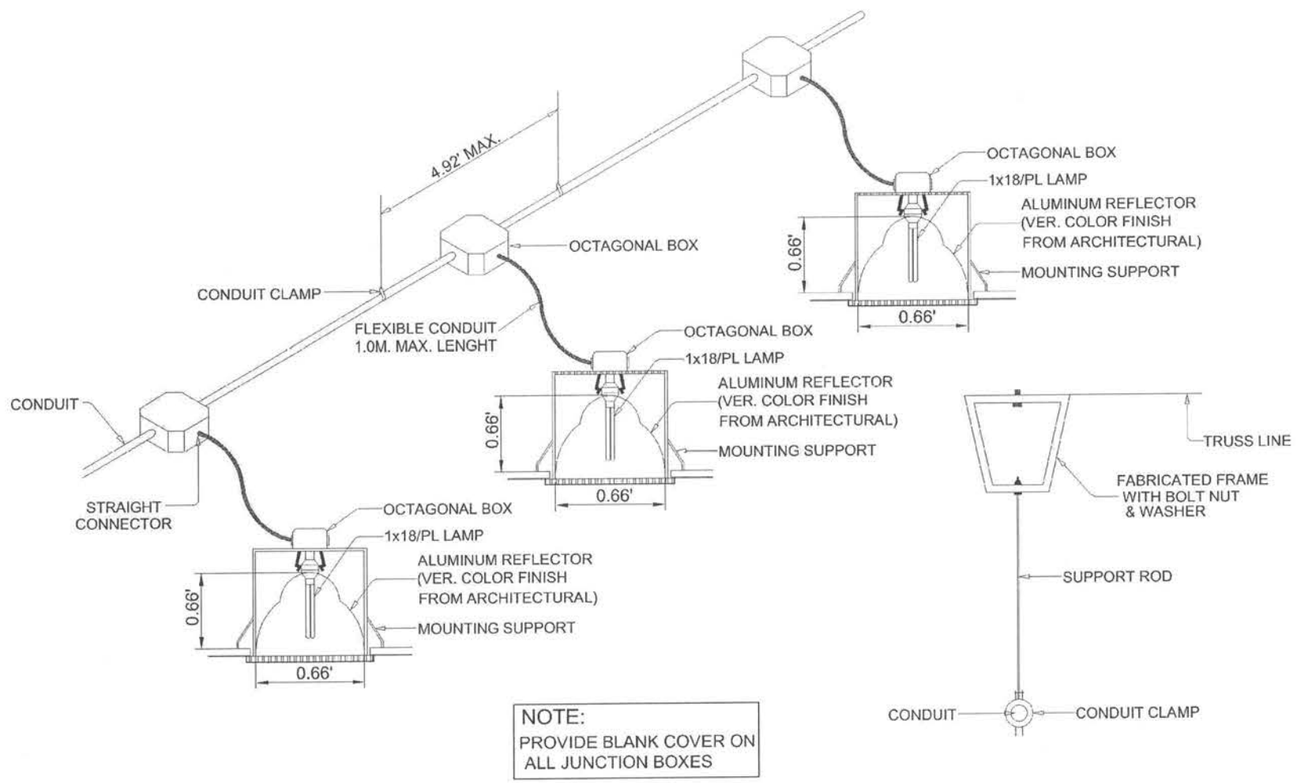

NOTE:
PROVIDE BLANK COVER ON
ALL JUNCTION BOXES

1
EE-7

CONDUIT RUN FOR LIGHTING DISTRIBUTION IN ONE CIRCUIT (FOR EXPOSED OR INSIDE DROP-CEILING INSTALLATION)

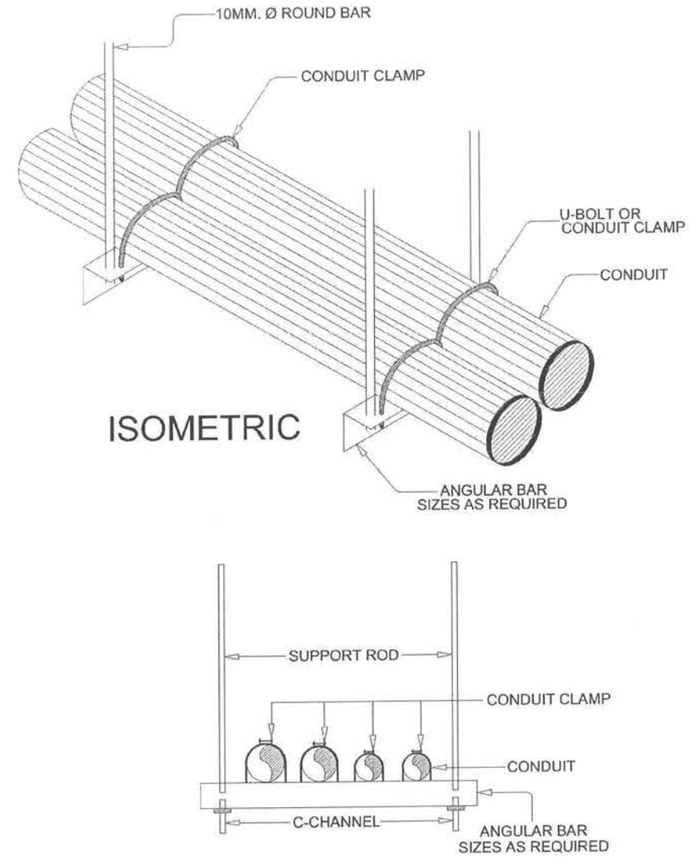

2
EE-7

CONDUIT SUPPORT DETAIL

R. S. ROQUE
ARCHITECTS
P.O. Box 6
Kolonia, POHNPEI
FSM 96941
Tel. (691) 320-2966
email add.:
archrsroque@yahoo.com
rai_roque@yahoo.com
CONSULTANT

Proposed F.S.M./Office of Environment and Emergency Management Bldg.
Palikir, Pohnpei

CONTENTS
AS SHOWN

Approved
Approved

REVISION	BY

DATE: Feb., 2011
SCALE: AS SHOWN
DRAWN:
JOB:
SHEET
EE-7

E.O.C. Bldg.

GENERAL NOTES

1. ALL PLUMBING WORKS INCLUDED HEREIN SHALL BE EXECUTED ACCORDING TO THE INTERNATIONAL PLUMBING CODE, THE UNIFORM BUILDING CODE, AND THE RULES AND REGULATION OF LOCAL GOVERNMENT AUTHORITIES CONCERNED.
2. COORDINATE THE DRAWING WITH OTHER RELATED DRAWINGS AND SPECIFICATIONS. THE ENGINEER SHALL BE NOTIFIED IMMEDIATELY OF ANY DISCREPANCY FOUND THEREIN.
3. ALL PIPES SHALL BE INSTALLED AS INDICATED ON PLANS, ANY RELOCATIONS REQUIRED FOR PROPER EXECUTIONS OF OTHER TRADES SHALL BE WITH PRIOR APPROVAL OF THE ARCHITECT OR ENGINEER.
4. PROPOSED SANITARY UTILITIES SHALL CONFORM TO THE ACTUAL LOCATION, DEPTH AND INVERT ELEVATION OF ALL EXISTING PIPES AND STRUCTURES AS VERIFIED BY THE CONTRACTOR.
5. ALL SLOPES FOR HORIZONTAL DRAINAGES SHALL MAINTAIN 1% UNLESS OTHERWISE SPECIFIED.
6. SIZES OF WATER SUPPLY PIPES TO FIXTURES SHALL BE IN ACCORDANCE WITH THE MANUFACTURERS INSTRUCTIONS.
7. THE CONTRACTOR SHALL VERIFY ALL EXISTING UTILITIES AT SITE AND COORDINATES THE WORKS WITH THE SEWER LINE EFFLUENT DISPOSSAL POINT AND WATER LINE SERVICE CONNECTING POINT.
8. ALL PIPES SIZES ARE IN MILLIMETERS AND ALL DIMENSIONS ARE IN METERS UNLESS OTHERWISE SPECIFIED.

MATERIAL SPECIFICATIONS

DRAINAGE LINES	ALL INSIDE DRAINAGE LINES SHOULD BE "EMERALD"
	PIPE SERIES 1000, CLASS 35 OR APPROVED EQUAL
DRAINAGE LINES	ALL OUTSIDE DRAINAGE LINES SHALL BE CONCRETE DRAINAGE PIPE
	(CDP) FROM 150mmø TO 250mmø, AND FROM 300mmø AND
	LARGER SHALL BE REINFORCED CONCRETE PIPE (RCP).
SEWER & VENT	POLY VINYL CHLORIDE (PVC) PIPE SERIES 1000, AND CLASS 35
	SIMILAR TO EMERALD BRAND OR APPROVED EQUAL.
COLD WATER LINE	POLYPROPHYLENE PIPE PN-10 SIMILAR TO EUROVEK "PLASTERM" OR EQUAL
HOT WATER LINE	POLYPROPHYLENE PIPE PN-20 SIMILAR TO EUROVEK "PLASTERM" OR EQUAL
VALVES	RATED AT MINIMUM PRESSURE
	CAPACITY OF 150 PSI SIMILAR TO KITZ OR EQUAL.
FLOOR DRAINS	MANUFACTURED BY "METMA" BRAND OR APPROVED EQUAL.
AIRCON DRAINS	"EMERALD PIPE W/ 25mmø THK. FIBER GLASS INSULATION.
TRANSFER/	UL/FM APPROVED SIMILAR TO GOULD'S PUMP OR EQUAL.
HYDOPHEUMATIC PUMP	
GAS LINE	B.I. PIPE SCHED.#40 SIMILAR APO OR SUPREME

VICINITY MAP

DRAINAGE PIPE DIAMETER SCHEDULE

NO.	DESCRIPTION	MATERIALS	Ø MM	Ø IN
1	OUTSIDE DRAINAGE LINE	RCDP	375	1'2"
2	OUTSIDE DRAINAGE LINE	RCDP	300	1'
3	OUTSIDE DRAINAGE LINE	CDP	250	10"
4	OUTSIDE DRAINAGE LINE	CDP	200	8"
5	OUTSIDE DRAINAGE LINE	CDP	150	6"
6	INSIDE DRAINAGE LINE	PVC PIPE	200	8"
7	INSIDE DRAINAGE LINE	PVC PIPE	150	6"
8	INSIDE DRAINAGE LINE	PVC PIPE	100	4"
9	INSIDE DRAINAGE LINE	PVC PIPE	75	3"

SEWER/WASTE AND VENT PIPE DIAMETER SCHEDULE

NO.	DESCRIPTION	MATERIALS	Ø MM	Ø IN
1	SEWER AND WASTE/DRAIN LINE	PVC PIPE	200	8"
2	SEWER AND WASTE/DRAIN LINE	PVC PIPE	150	6"
3	SEWER AND WASTE/DRAIN LINE	PVC PIPE	100	4"
4	WASTE/DRAIN AND VENT LINE	PVC PIPE	75	3"
5	WASTE/DRAIN AND VENT LINE	PVC PIPE	50	2"

HOT AND COLD PIPE DIAMETER SCHEDULE

NO.	DESCRIPTION	MATERIALS	Ø MM	Ø IN
1	COLD WATER LINE	PPR PIPE PN-20	40	1 1/2
2	COLD WATER LINE	PPR PIPE PN-20	32	1 1/4"
3	COLD WATER LINE	PPR PIPE PN-20/10	25	1"
4	HOT AND COLD WATER LINE	PPR PIPE PN-20/10	20	3/4"
5	HOT AND COLD WATER LINE	PPR PIPE PN-20/10	13	1/2"

LEGEND AND SYMBOLS

SP / WP	SOIL / WASTE PIPE	
VP / VAC	VENT PIPE / VENT PIPE ABOVE CEILING	
DP	DRAIN PIPE	
CWL / CWLAC	COLD WATER LINE / ABOVE CEILING	
HWL / HWLAC	HOT WATER LINE / ABOVE CEILING	
GV	GATE VALVE	
CV	CHECK VALVE	
GV/VB	GATE VALE W/ VALVE BOX	
		WATER LINE WITH PLUG
GV / HB		GATE VALVE / HOSE BIBB
GV / WM		GATE VALVE / WATER METER
GCO		GROUND CLEAN-OUT
FCO		FLOOR CLEAN-OUT
CCO		CEILING CLEAN-OUT
CDP/RCP		CONCREATE/REINFORCED CONCRETE DRAIN PIPE

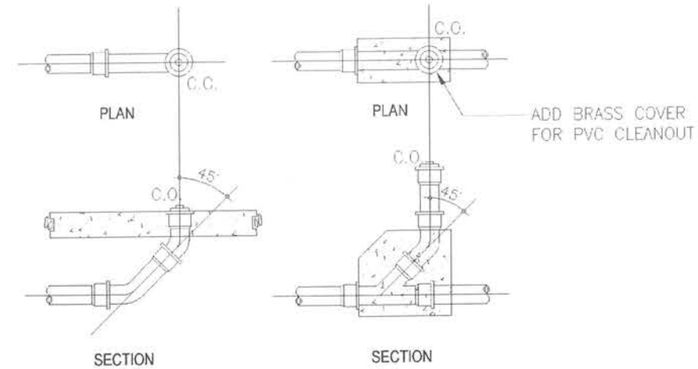

1 / P100 **FLOOR CLEAN-OUT DETAIL**
SCALE NOT SCALE:

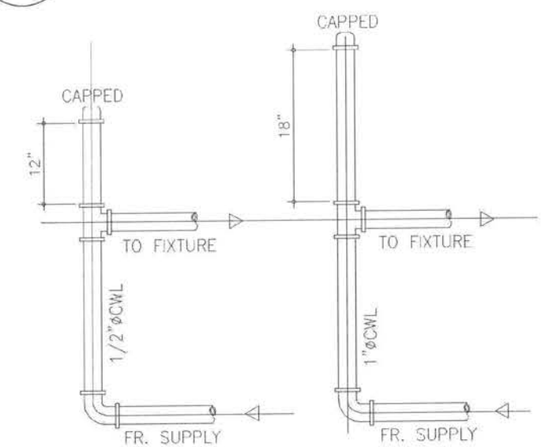

2 / P100 **AIR CHAMBER DETAIL**
SCALE NOT SCALE:

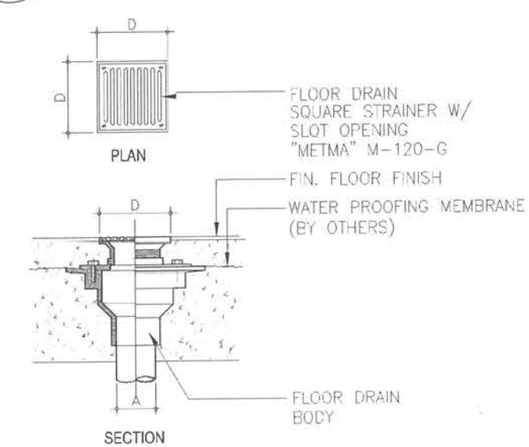

3 / P100 **FLOOR DRAIN DETAIL**
SCALE NOT SCALE:

R. S. ROQUE
ARCHITECTS
P.O. Box 6
Kolonia, POHNPEI
FSM 96941
Tel. (691) 320-2966
email add.:
archr.sroque@yahoo.com
rai_roque@yahoo.com
CONSULTANT
RYAN SALAS ROQUE
PHILIPPINES
REGISTERED ARCHITECT

Proposed F.S.M./Office of Environment and Emergency Management Bldg.

Palikir, Pohnpei

CONTENTS
GEN. NOTES

Approved
Approved

REVISION	BY

DATE: Feb., 2011
SCALE: AS SHOWN
DRAWN:
JOB:
SHEET
P-100

E.O.C. Bldg.

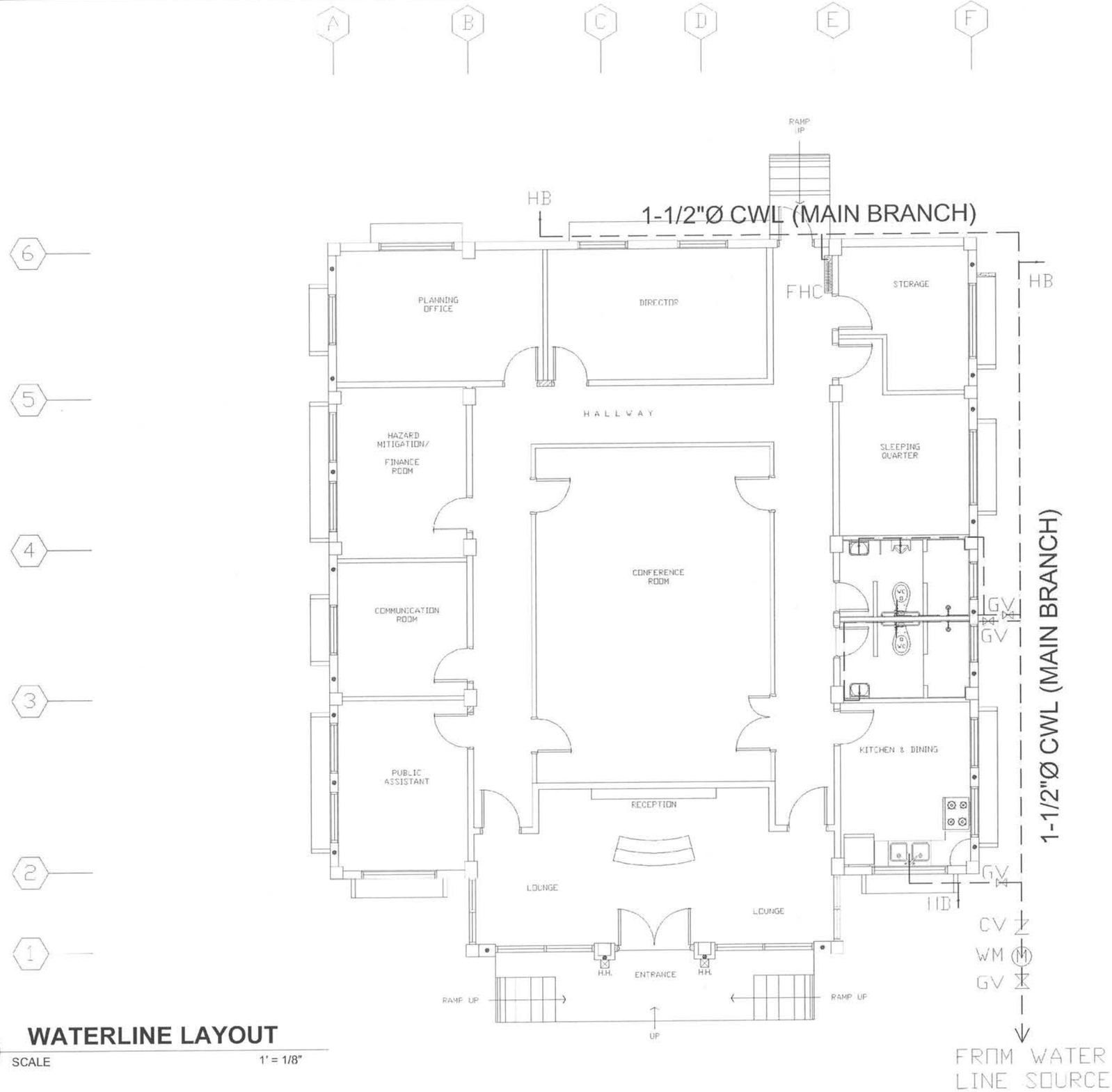

1 P101 **WATERLINE LAYOUT**

SCALE 1' = 1/8"

R. S. ROQUE
ARCHITECTS
P.O. Box 6
Kolonia, POHNPEI
FSM 96941
Tel. (691) 320-2966
email add.:
archrsroque@yahoo.com
rai_roque@yahoo.com

CONSULTANT

RYAN SALAS ROQUE
PRC NO. 0024915
PHILIPPINES
REGISTERED ARCHITECT

Proposed F.S.M./Office of Environment and Emergency Management Bldg.

Palikir, Pohnpei

CONTENTS

WATER LINE LAYOUT

Approved

Approved

REVISION	BY

DATE: Feb., 2011

SCALE: AS SHOWN

DRAWN:

JOB:

SHEET

P-101

E.O.C. Bldg.

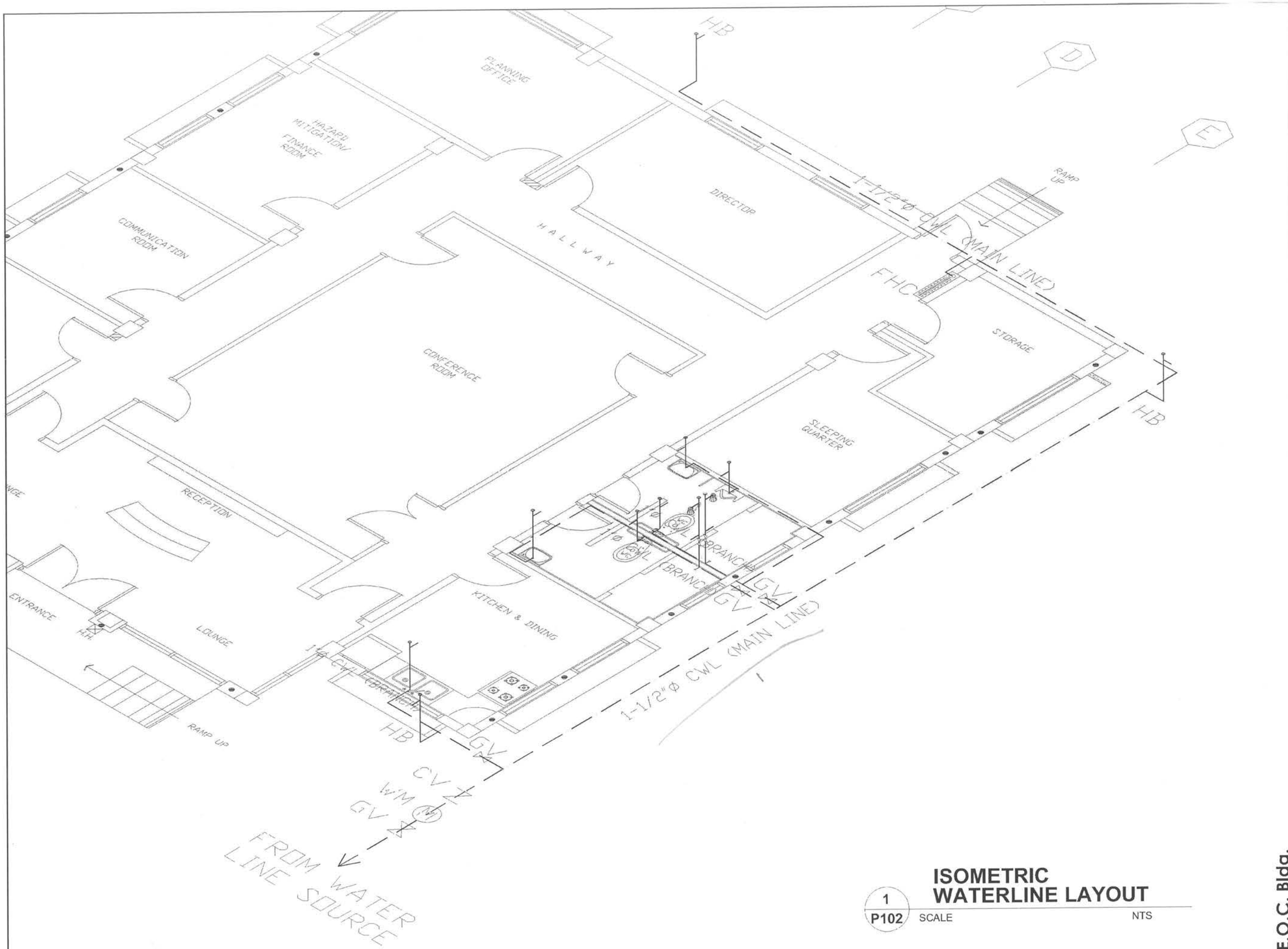

1
P102

ISOMETRIC WATERLINE LAYOUT

SCALE NTS

E.O.C. Bldg.

R. S. ROQUE
ARCHITECTS
P.O. Box 6
Kolonia, PONHPEI
FSM 96941
Tel. (691) 320-2966
email add.:
archrsroque@yahoo.com
rsl_roque@yahoo.com

CONSULTANT

RYAN SALAS ROQUE
PRC NO 0024042
PHILIPPINES
REGISTERED ARCHITECT

Proposed F.S.M./Office of Environment and Emergency Management Bldg.

Palikir, Pohnpei

CONTENTS

ISOMETRIC WATERLINE LAYOUT

Approved

Approved

REVISION	BY

DATE: Feb., 2011

SCALE: AS SHOWN

DRAWN:

JOB:

SHEET

P-102

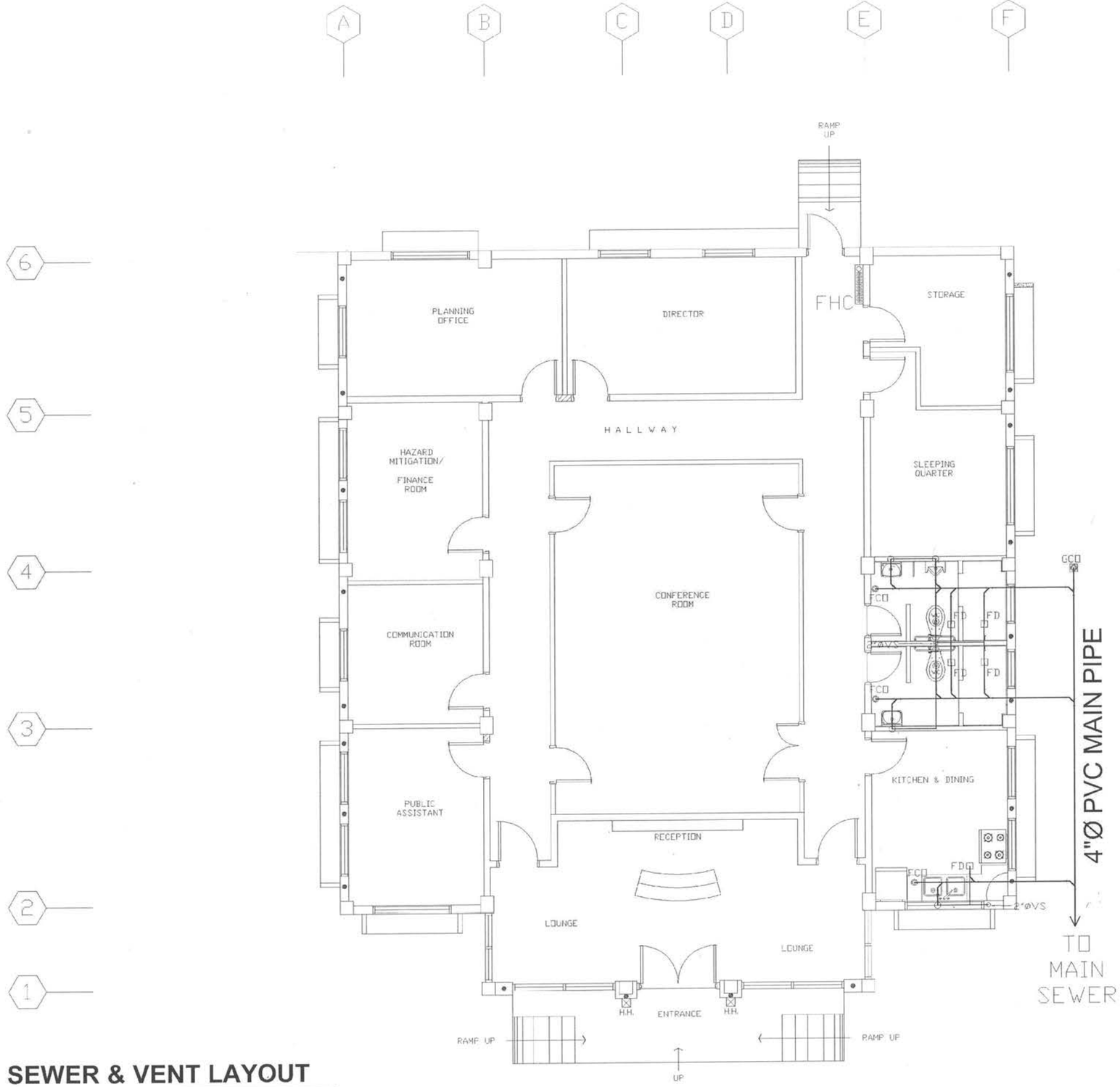

1 P103 **SEWER & VENT LAYOUT**

SCALE 1' = 1/8"

E.O.C. Bldg.

R. S. ROQUE
ARCHITECTS
P.O. Box 6
Kolonia, PONHPEI
FSM 96941
Tel. (691) 320-2966
email add.:
archrsroque@yahoo.com
ral_roque@yahoo.com

CONSULTANT

RYAN SALAS ROQUE
REGISTERED ARCHITECT

Proposed F.S.M./Office of Environment and Emergency Management Bldg.

Palikir, Pohnpei

CONTENTS

SEWER AND VENT LAYOUT

Approved

Approved

REVISION	BY

DATE: Feb., 2011

SCALE: AS SHOWN

DRAWN:

JOB:

SHEET

P-103

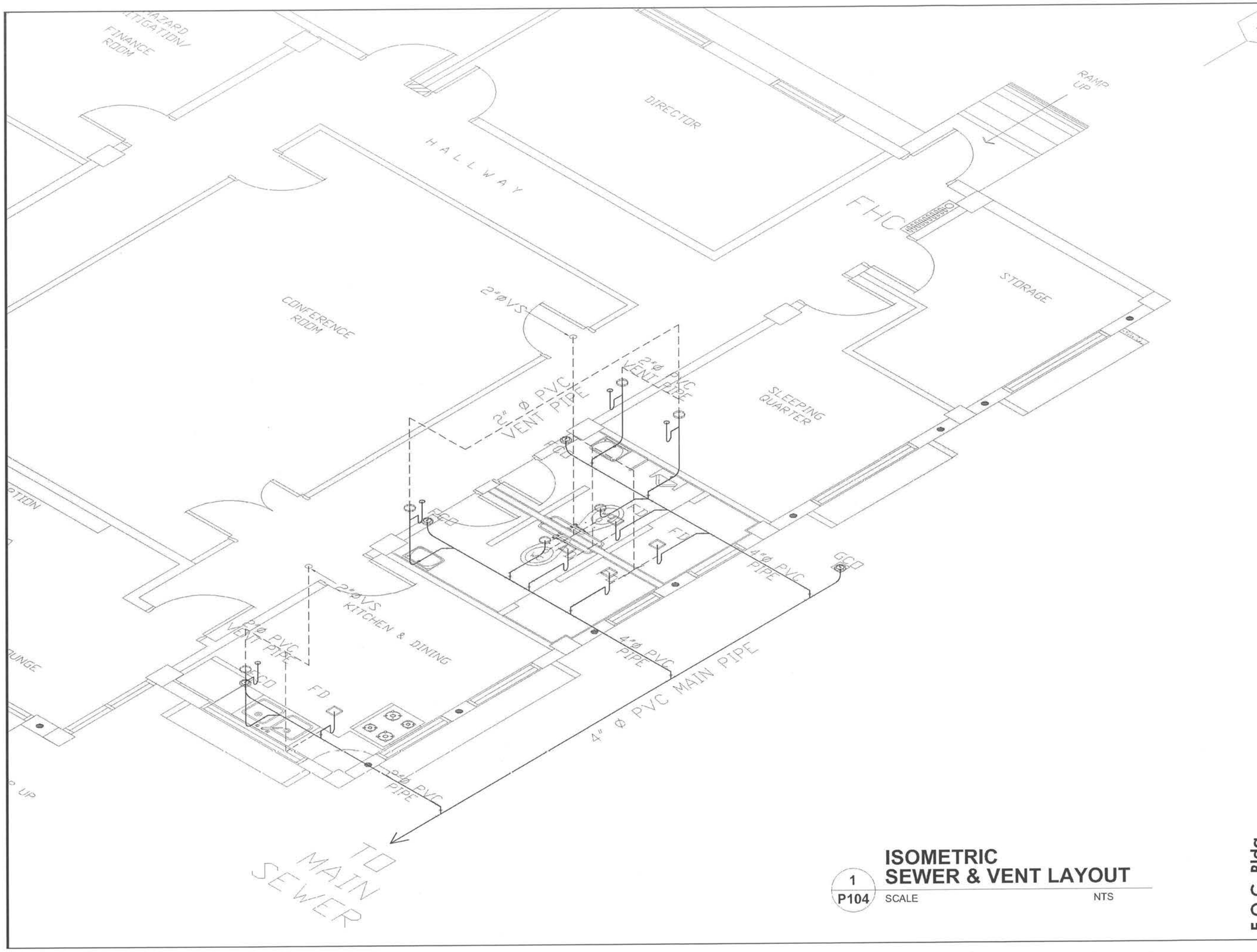

1
P104

ISOMETRIC SEWER & VENT LAYOUT

SCALE NTS

E.O.C. Bldg.

R. S. ROQUE
ARCHITECTS
P.O. Box 6
Kolonia, POHNPEI
FSM 96941
Tel. (691) 320-2966
email add.:
archrsroque@yahoo.com
rai_roque@yahoo.com

CONSULTANT

RYAN SALAS ROQUE
FSM NO. 00240
CLIFFORD
REGISTERED ARCHITECT

Proposed F.S.M./Office of Environment and Emergency Management Bldg.

Palikir, Pohnpei

CONTENTS

ISOMETRIC SEWER AND VENT LAYOUT

Approved

Approved

REVISION	BY

DATE: Feb., 2011
SCALE: AS SHOWN
DRAWN:
JOB:
SHEET
P-104

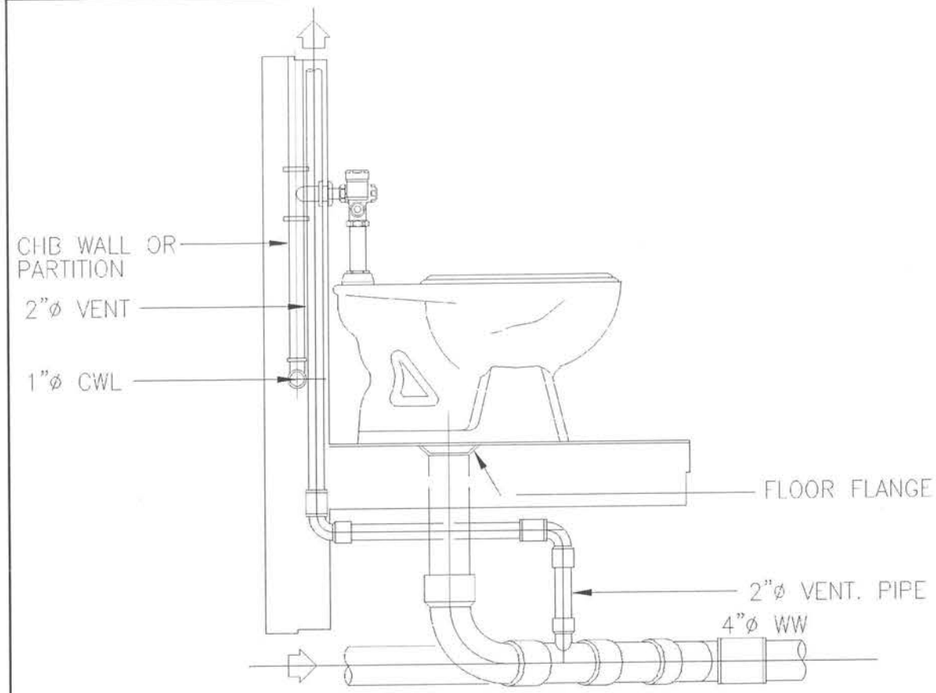

SECTION

1 / P105 **TOILET BOWL SECTION W/ FLUSH VALVE**

SCALE NTS

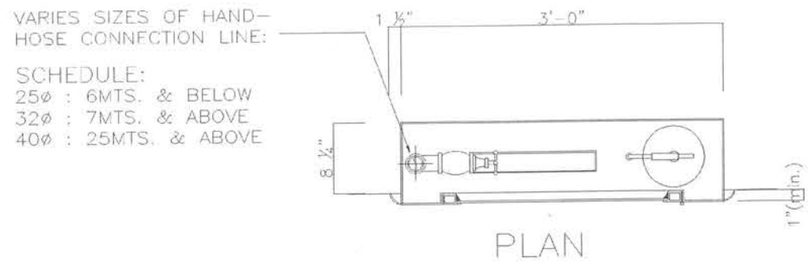

PLAN

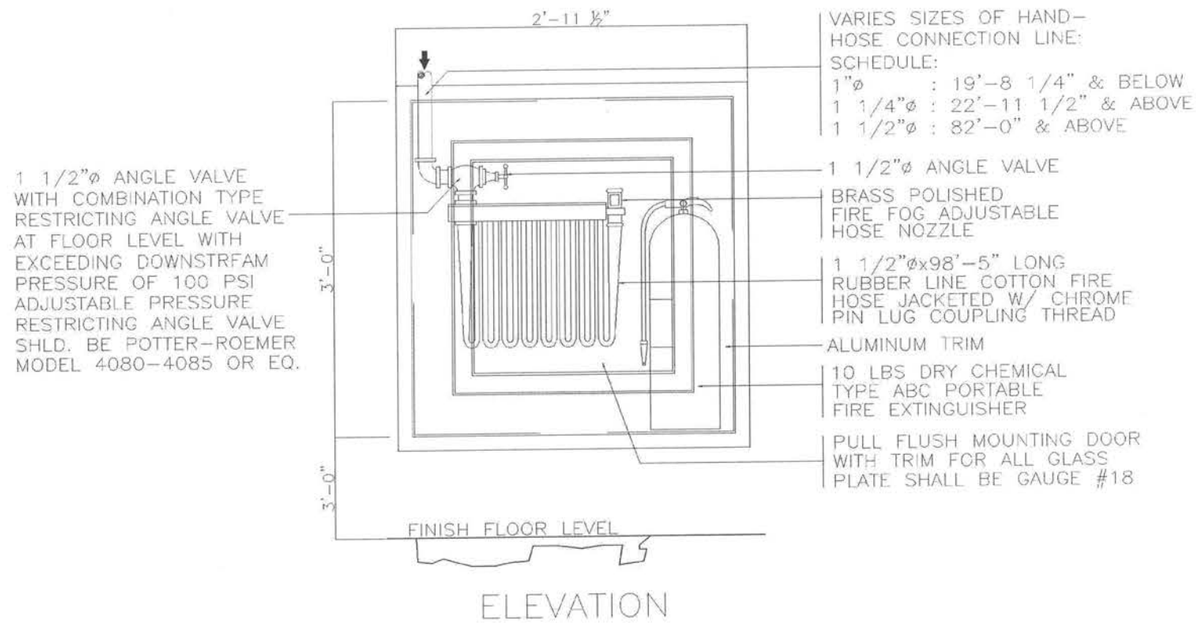

ELEVATION

3 / P105 **FIRE HOSE CABINET**

SCALE NTS

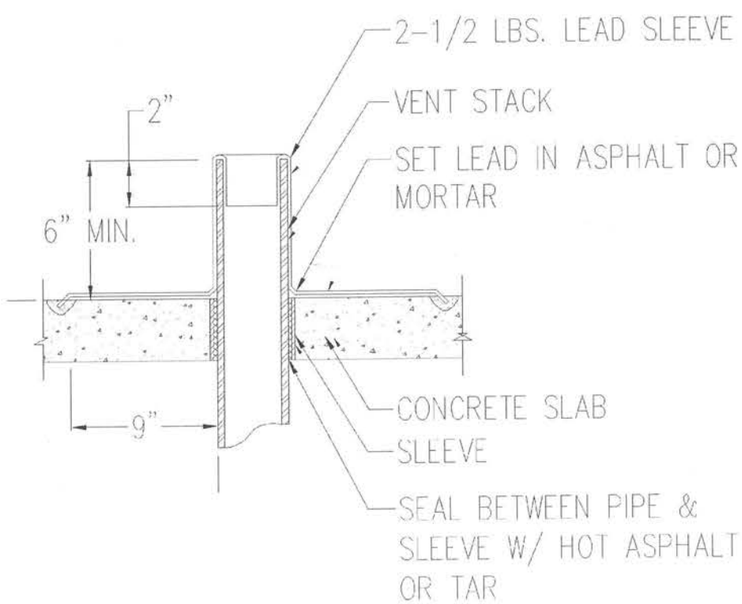

2 / P105 **VSTR SECTION**

SCALE NTS

R. S. ROQUE
ARCHITECTS
P.O. Box 6
Kolonia, POHNPEI
FSM 96941
Tel. (691) 320-2966
email add.:
archrsroque@yahoo.com
rai_roque@yahoo.com
CONSULTANT
RYAN SALAS ROQUE
REGISTERED ARCHITECT

Proposed F.S.M./Office of Environment and Emergency Management Bldg.

Palikir, Pohnpei

E.O.C. Bldg.

CONTENTS

DETAILS

Approved

Approved

REVISION	BY

DATE: Feb., 2011

SCALE: AS SHOWN

DRAWN:

JOB:

SHEET

P-105

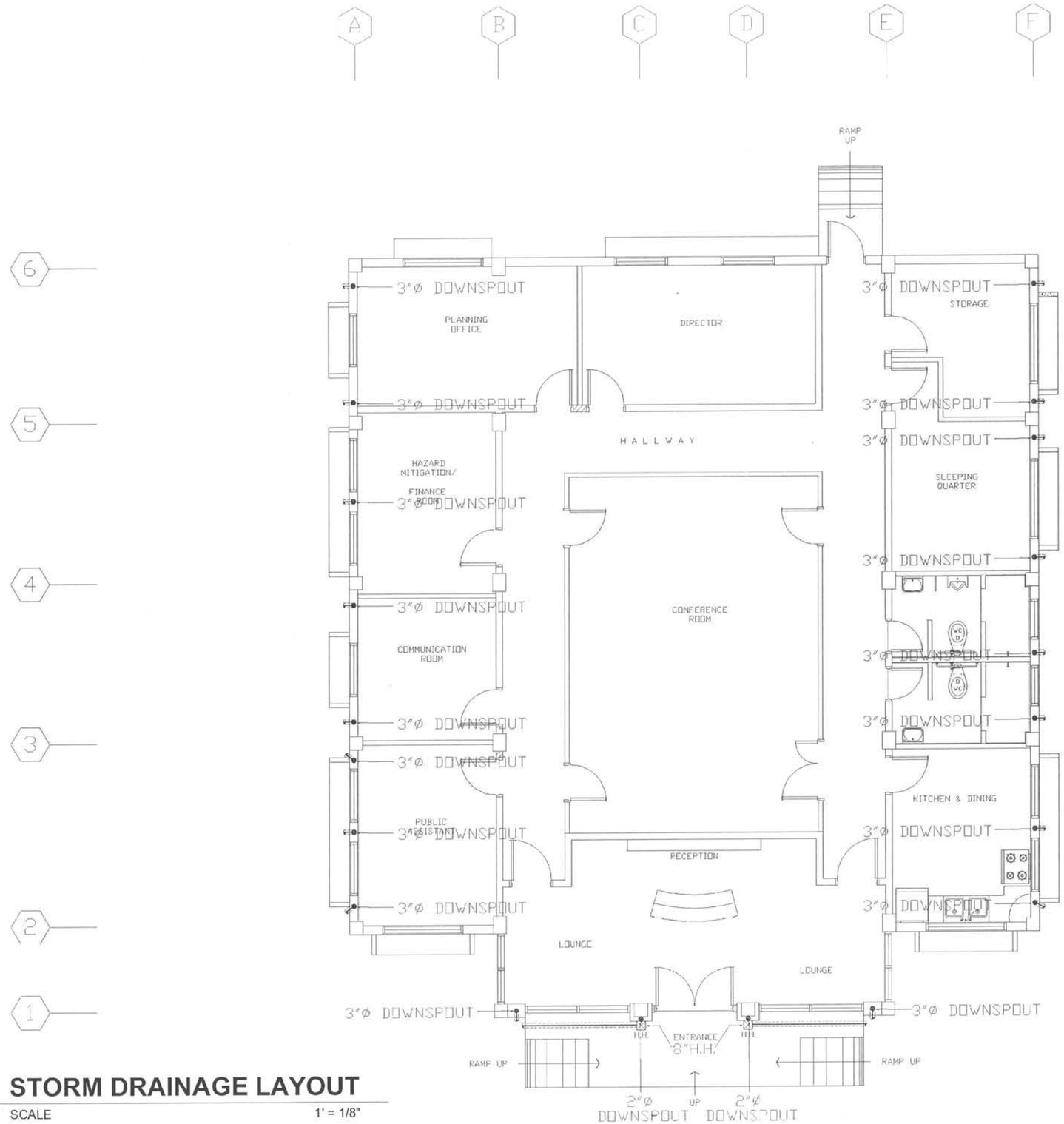

1
P106

STORM DRAINAGE LAYOUT

SCALE 1' = 1/8"

E.O.C. Bldg.

R. S. ROQUE
ARCHITECTS

P.O. Box 6
Kolonia, POHNPEI
FSM 96941
Tel. (691) 320-2966
email add.:
archrroque@yahoo.com
ral_roque@yahoo.com

CONSULTANT

RYAN SALAS ROQUE
PSC NO. 002401
PROFESSIONAL ARCHITECT
FEDERATED STATES OF MICRONESIA

Proposed F.S.M./Office of Environment and Emergency Management Bldg.

Palikir, Pohnpei

CONTENTS

STORM DRAINAGE LAYOUT

Approved

Approved

REVISION	BY

DATE: Feb., 2011

SCALE: AS SHOWN

DRAWN:

JOB:

SHEET

P-106

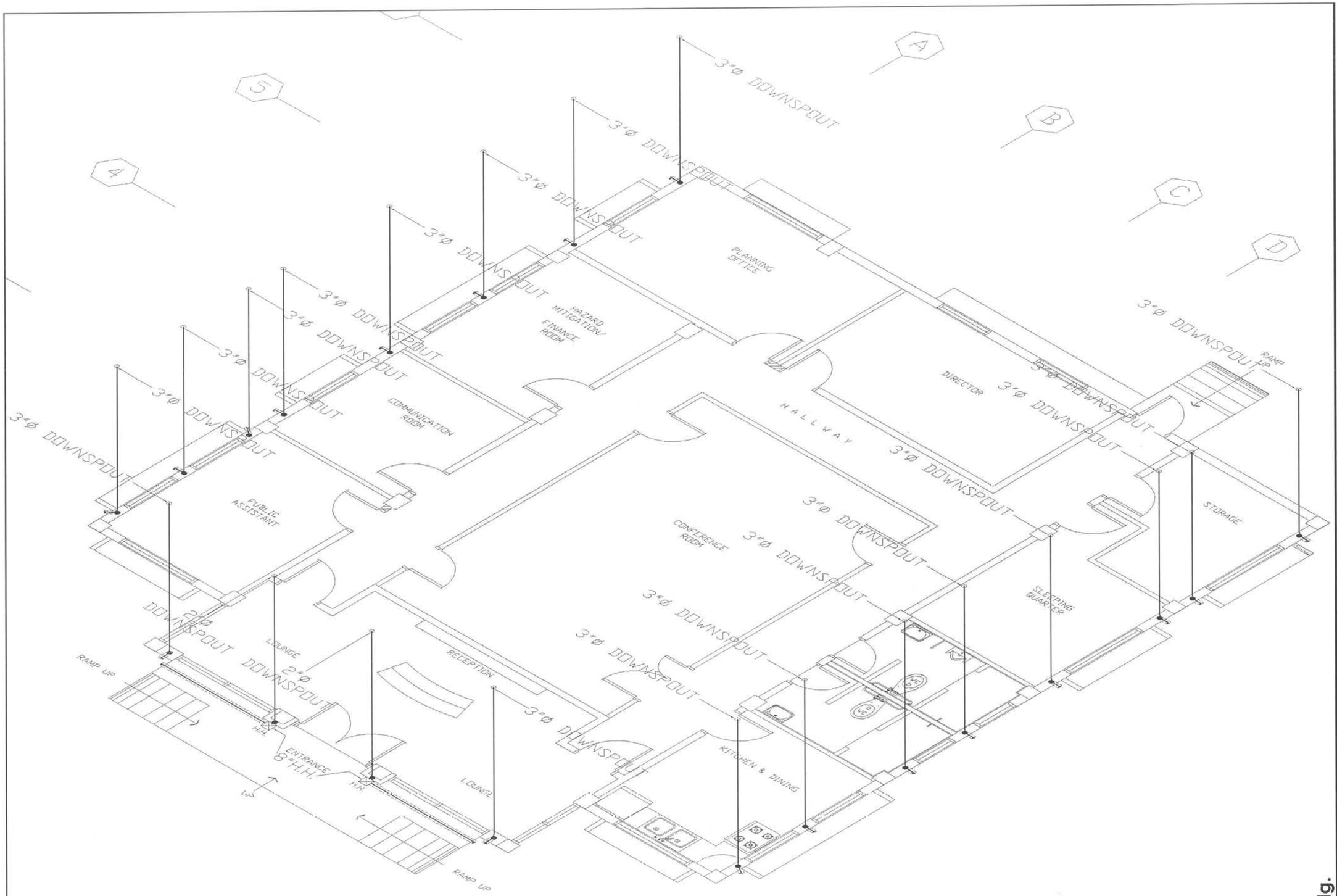

1
P107

ISOMETRIC STORM DRAINAGE LAYOUT

SCALE NTS

E.O.C. Bldg.

R. S. ROQUE
ARCHITECTS
P.O. Box 6
Kolonia, POHNPEI
FSM 96941
Tel. (691) 320-2966
email add.:
archrsroque@yahoo.com
rai_roque@yahoo.com
CONSULTANT
RYAN SALAS ROQUE
PRC NO. 0024-PHILIPPINES
REGISTERED ARCHITECT

Proposed F.S.M./Office of Environment and Emergency Management Bldg.

Palikir, Pohnpei

CONTENTS

ISOMETRIC STORM DRAINAGE LAYOUT

Approved

Approved

REVISION	BY

DATE: Feb., 2011
SCALE: AS SHOWN
DRAWN:
JOB:
SHEET
P-107

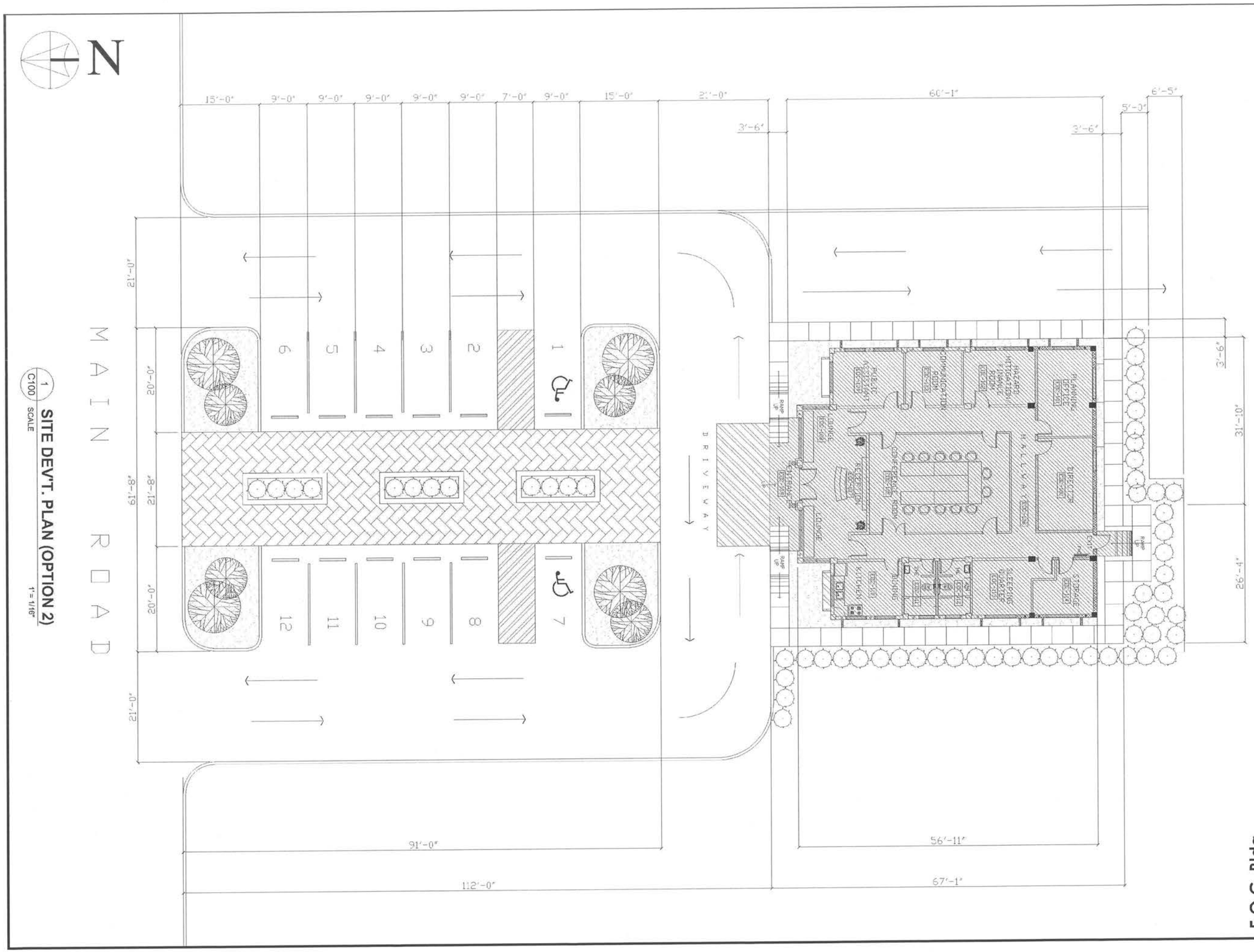

1 C100 SITE DEV'T. PLAN (OPTION 2)
SCALE 1" = 1/16"

R. S. ROQUE
ARCHITECTS

P.O. Box 6
Kolonia, POHNPEI
FSM 96941
Tel. (691) 320-2966
email add.:
arch.rsroque@yahoo.com
rai_roque@yahoo.com

CONSULTANT

RYAN SALAS ROQUE
PROFESSIONAL ARCHITECT
REGISTERED ARCHITECT

Proposed F.S.M./Office of Environment and Emergency Management Bldg.

Palikir, Pohnpei

CONTENTS
SDP

Approved

Approved

REVISION	BY

DATE: Feb., 2011
SCALE: AS SHOWN
DRAWN:
JOB:
SHEET
C100

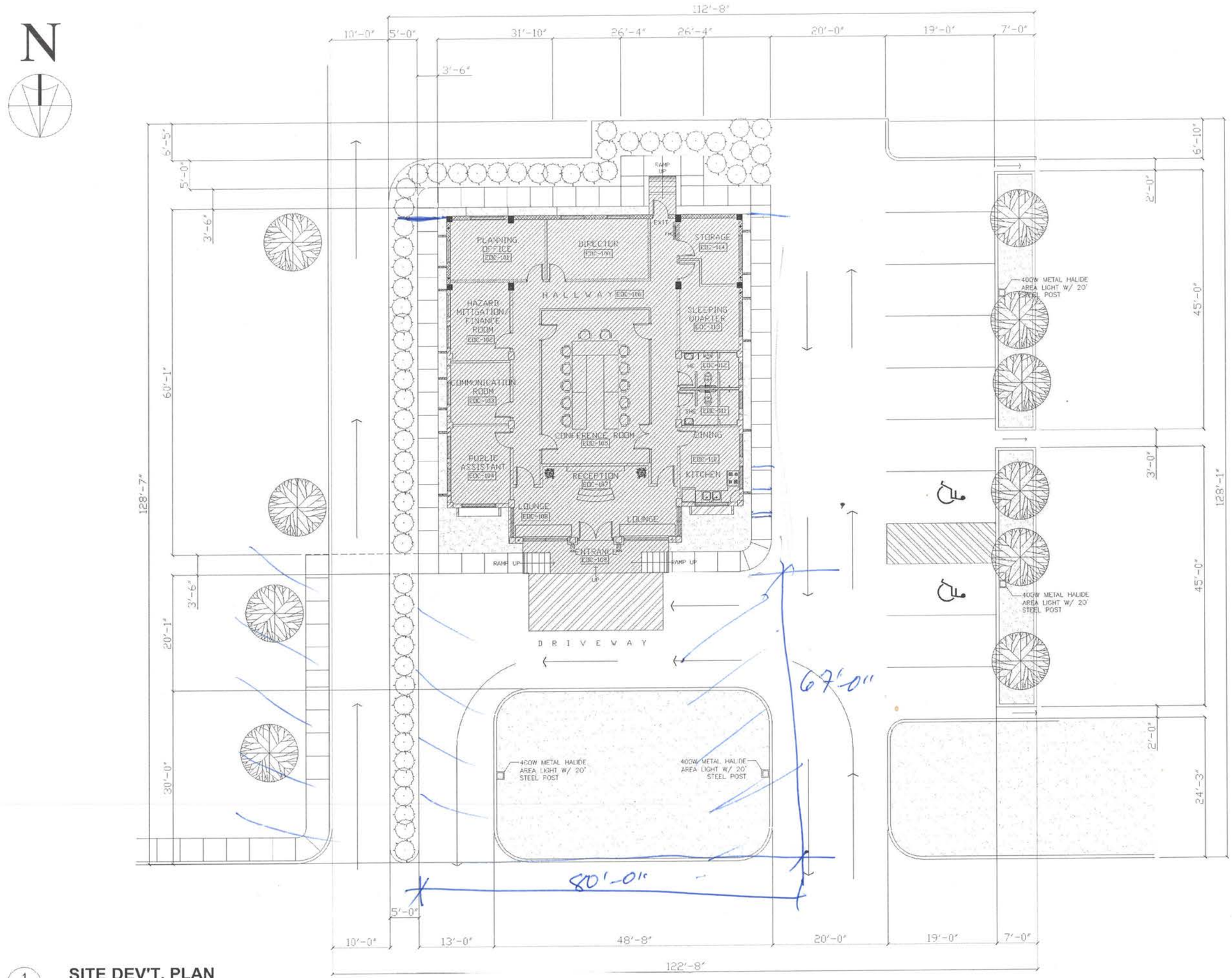

1 C100 **SITE DEV'T. PLAN**

SCALE 1" = 1/16"

E.O.C. Bldg.

R. S. ROQUE
ARCHITECTS
P.O. Box 6
Kolonia, POHNPEI
FSM 96941
Tel. (691) 320-2966
email add.:
archrsroque@yahoo.com
rai_roque@yahoo.com

CONSULTANT

BRIAN SALAS ROQUE
FSC SO 98401
PHILIPPINES
REGISTERED ARCHITECT

Proposed F.S.M./Office of Environment and Emergency Management Bldg.

Palikir, Pohnpei

CONTENTS

SDP

Approved

Approved

REVISION	BY

DATE: Feb., 2011

SCALE: AS SHOWN

DRAWN:

JOB:

SHEET

C100

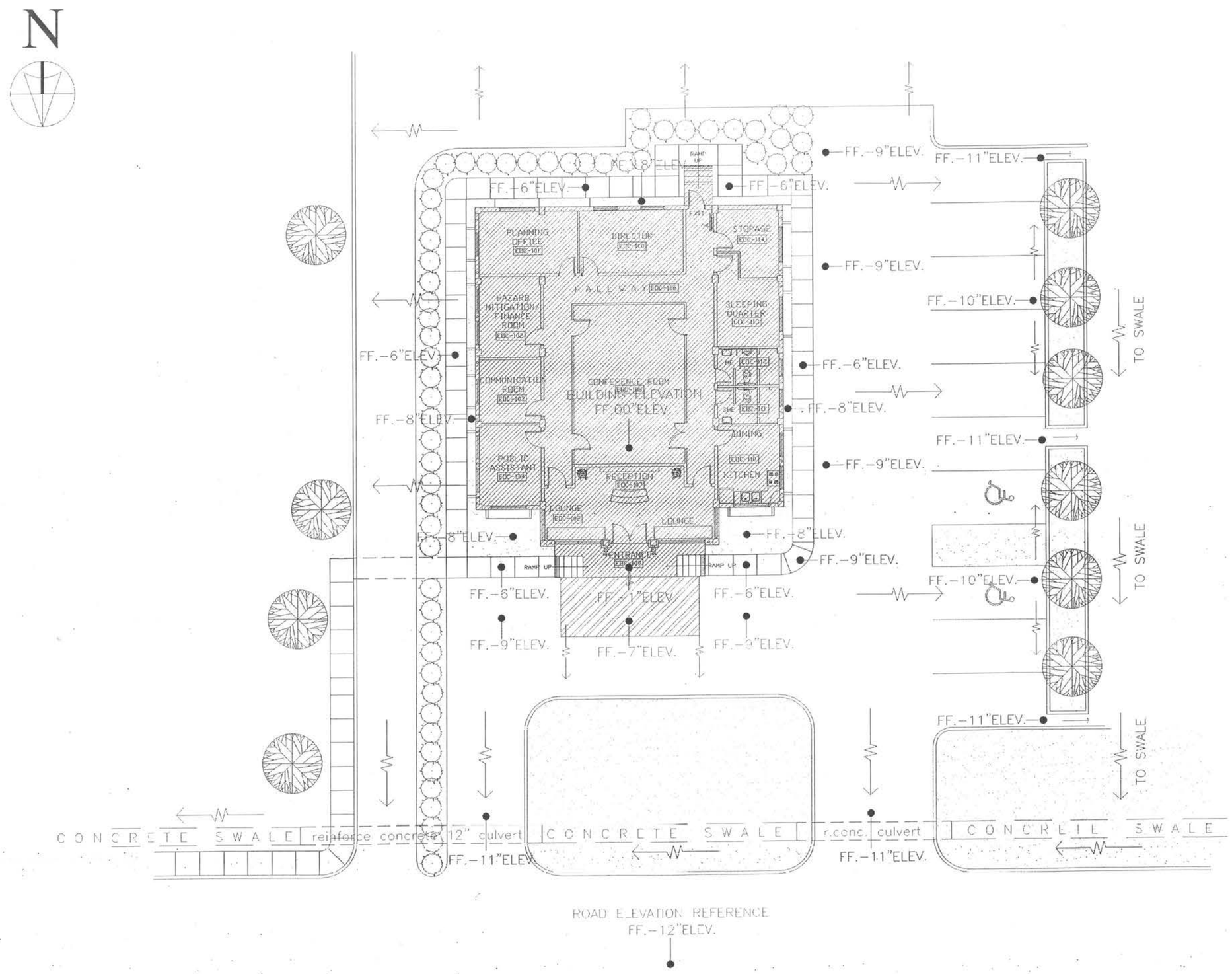

1
C200 SCALE

GRADING / SITE DRAINAGE PLAN

1" = 1/16"

NOTE: USE EXISTING ROAD AS FINISHED FLOOR REFERENCE.
BUILDING F.F.00ELEV. IS 12" ABOVE ROAD FINISH ELEVATION.

E.O.C. Bldg.

R. S. ROQUE
ARCHITECTS
P.O. Box 6
Kolonia, POHNPEI
FSM 96941
Tel. (691) 320-2966
email add.:
archr.roque@yahoo.com
rai_roque@yahoo.com

CONSULTANT

RYAN SALAS ROQUE
REG. NO. 00240
PHILIPPINES
REGISTERED ARCHITECT

Proposed F.S.M./Office of Environment and Emergency Management Bldg.

Palikir, Pohnpei

CONTENTS

GRADING/
SITE DRAINAGE

Approved

Approved

REVISION	BY

DATE: Feb., 2011

SCALE: AS SHOWN

DRAWN:

JOB:

SHEET

C200

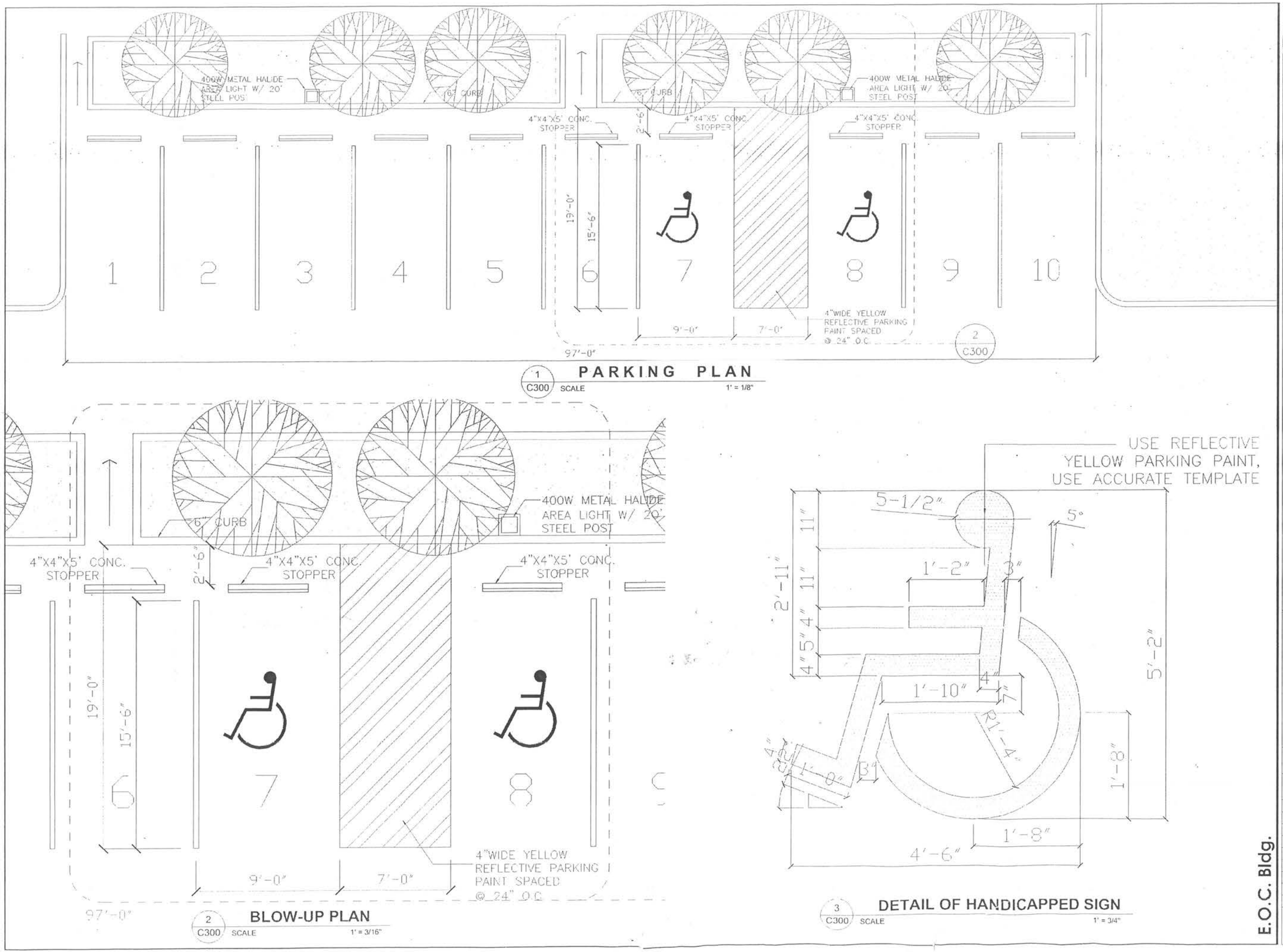

1 C300 **PARKING PLAN** SCALE 1" = 1/8"

2 C300 **BLOW-UP PLAN** SCALE 1" = 3/16"

3 C300 **DETAIL OF HANDICAPPED SIGN** SCALE 1" = 3/4"

R. S. ROQUE
ARCHITECTS
P.O. Box 6
Kolonia, POHNPEI
FSM 96941
Tel. (691) 320-2966
email add:
archr.roque@yahoo.com
rai_roque@yahoo.com
CONSULTANT
RYAN SALAS ROQUE
PRC NO. 0024015
PHILIPPINES
REGISTERED ARCHITECT

Proposed F.S.M./Office of Environment and Emergency Management Bldg.

Palikir, Pohnpei

CONTENTS

GRADING/ SITE DRAINAGE

Approved

Approved

REVISION	BY

DATE: Feb., 2011

SCALE: AS SHOWN

DRAWN:

JOB:

SHEET

C300

E.O.C. Bldg.

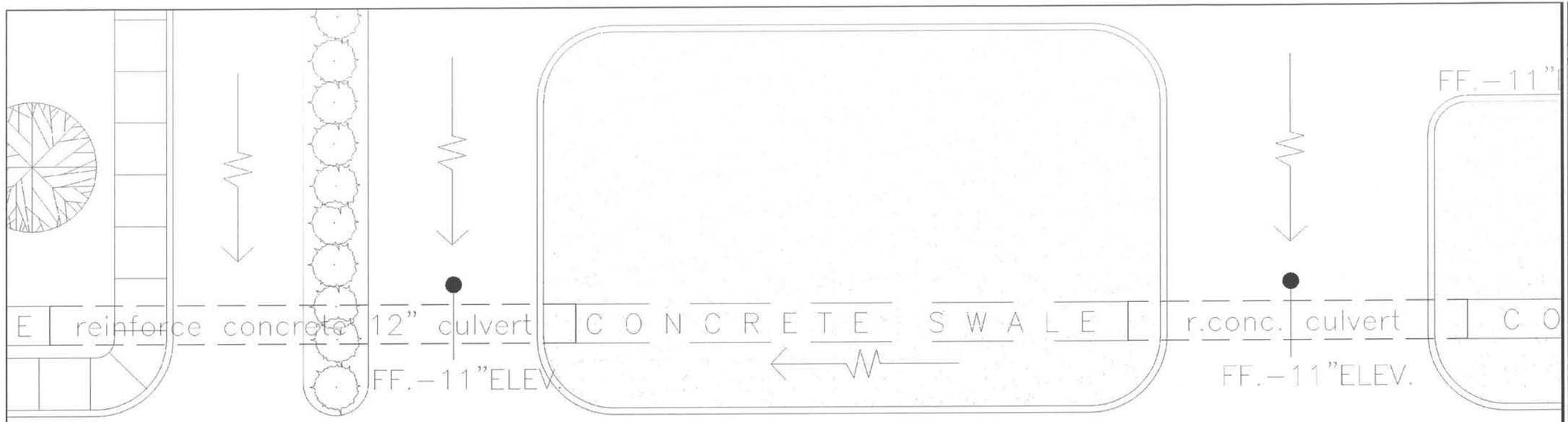

1 / C301 **PLAN OF SITE ENTRANCE**
SCALE 1' = 1/8"

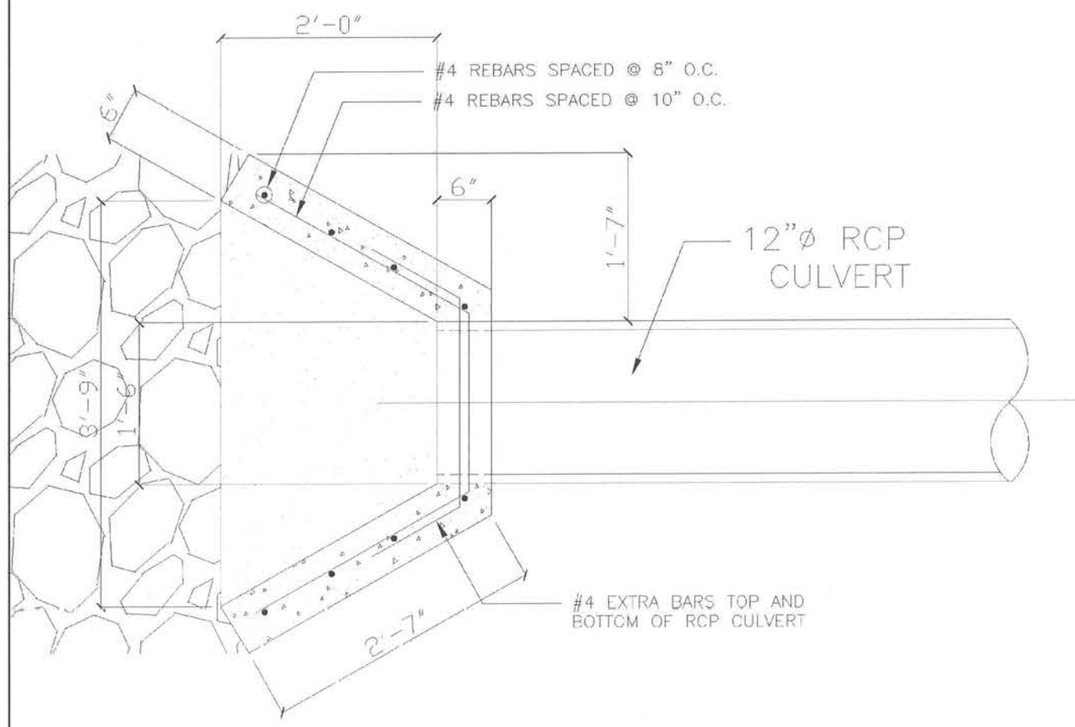

2 / C301 **DETAIL OF HEADWALL (PLAN)**
SCALE 1' = 3/4"

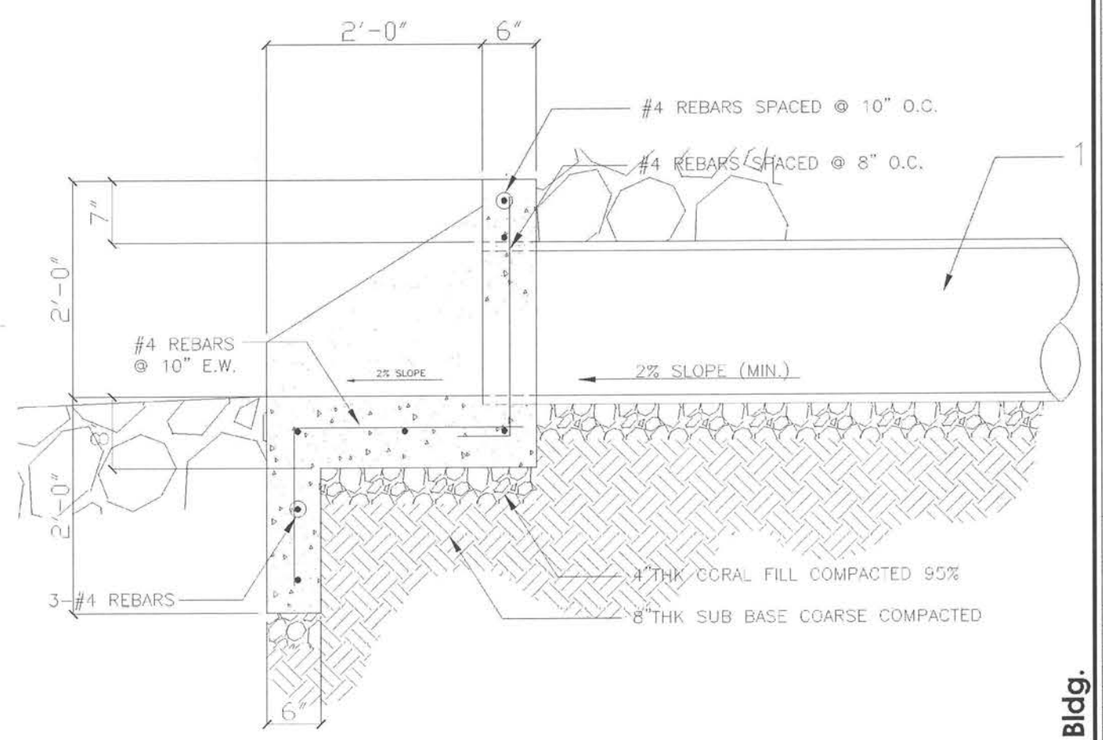

3 / C301 **SECTION OF HEADWALL**
SCALE 1' = 3/4"

E.O.C. Bldg.

R. S. ROQUE
ARCHITECTS
P.O. Box 6
Kolonia, POHNPEI
FSM 96941
Tel. (691) 320-2966
email add.:
archr.sroque@yahoo.com
rai_roque@yahoo.com
CONSULTANT
RYAN SALAS ROQUE
REGISTERED ARCHITECT

Proposed F.S.M./Office of Environment and Emergency Management Bldg.

Palikir, Pohnpei

CONTENTS

DETAILS

Approved

Approved

REVISION	BY

DATE: Feb., 2011
SCALE: AS SHOWN
DRAWN:
JOB:
SHEET
C301

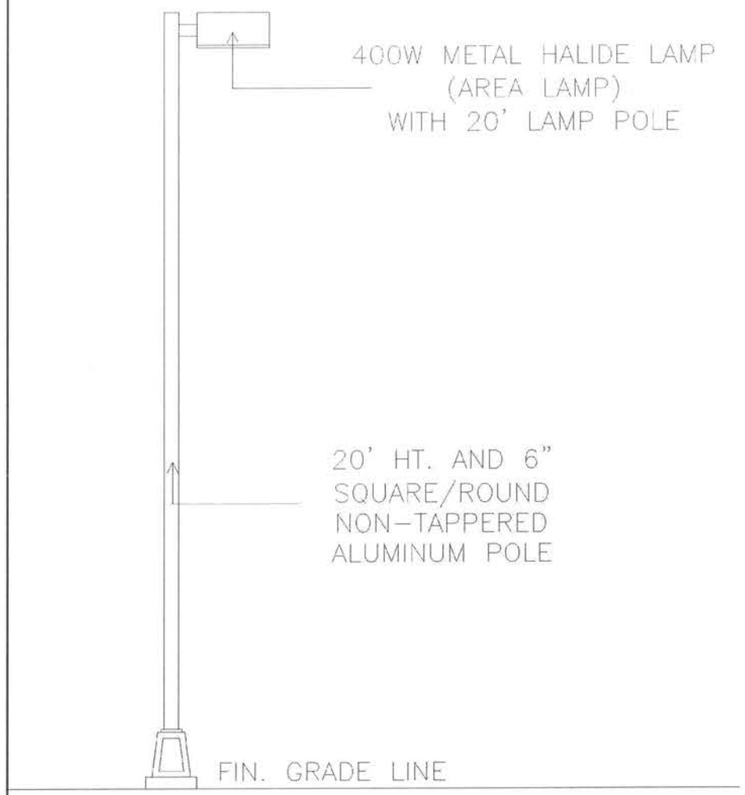

3 C200 **ELEVATION OF PARKING POST**
SCALE 1' = 1/4"

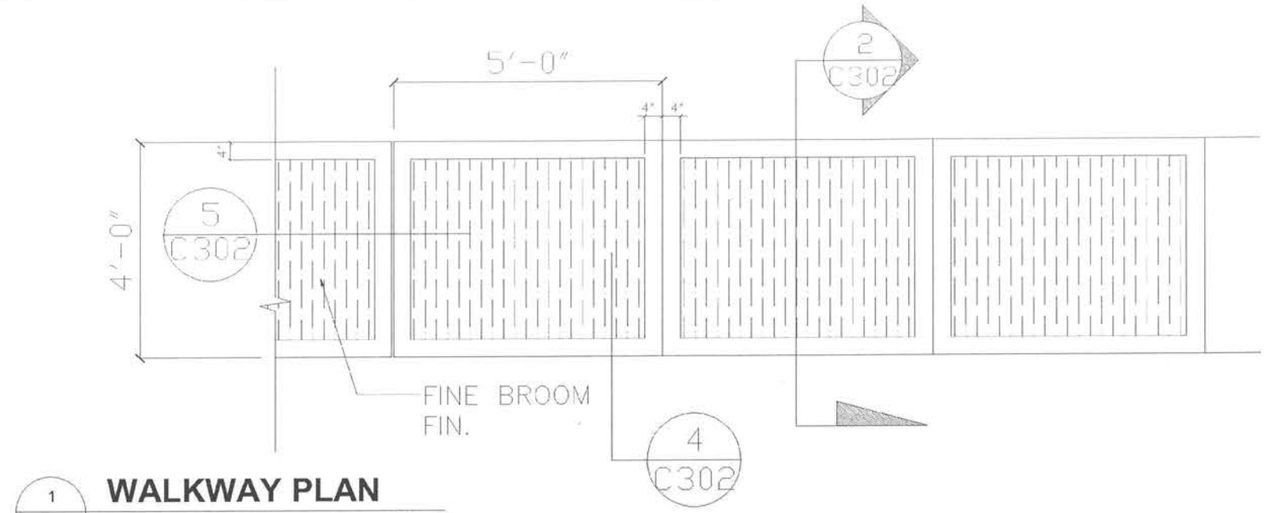

1 C302 **WALKWAY PLAN**
SCALE 1' = 3/8"

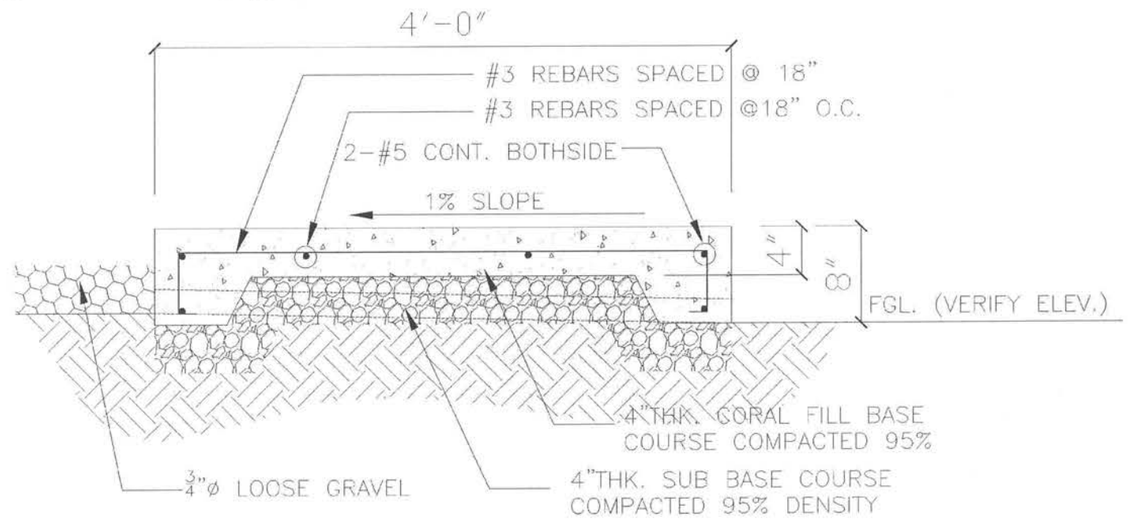

2 C-5 **DETAIL OF WALKWAY (SECTION)**
SCALE 1' = 1"

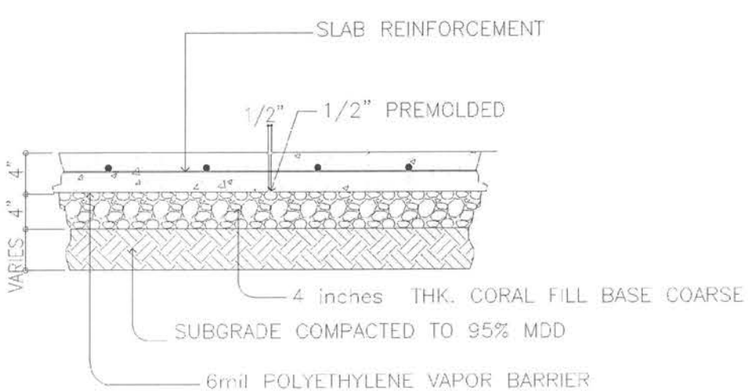

4 C302 **EXPANSION JOINT DETAIL**
SCALE 1' = 1/4"

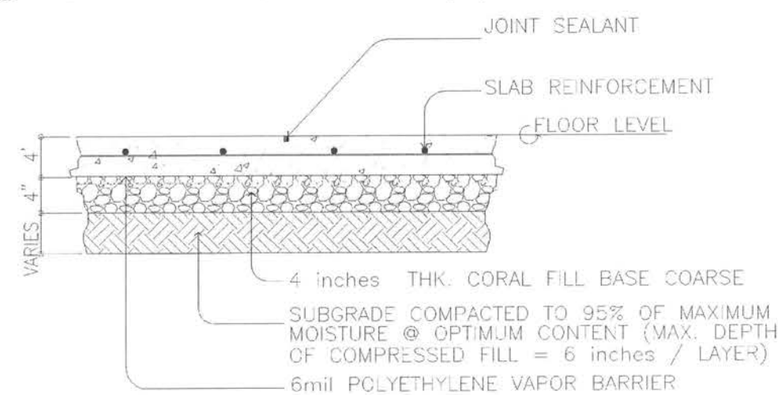

5 C302 **CONTRACTION JOINT DETAIL**
SCALE 1' = 1/4"

E.O.C. Bldg.

R. S. ROQUE
ARCHITECTS
P.O. Box 6
Kolonia, POHNPEI
FSM 96941
Tel. (691) 320-2966
email add.:
archrsroque@yahoo.com
rai_roque@yahoo.com
CONSULTANT
BRIAN SALAS ROQUE
PATTI - PETER
REGISTERED ARCHITECT

Proposed F.S.M./Office of Environment and Emergency Management Bldg.

Palikir, Pohnpei

CONTENTS

DETAILS

Approved

Approved

REVISION	BY

DATE: Feb., 2011
SCALE: AS SHOWN
DRAWN:
JOB:
SHEET
C302

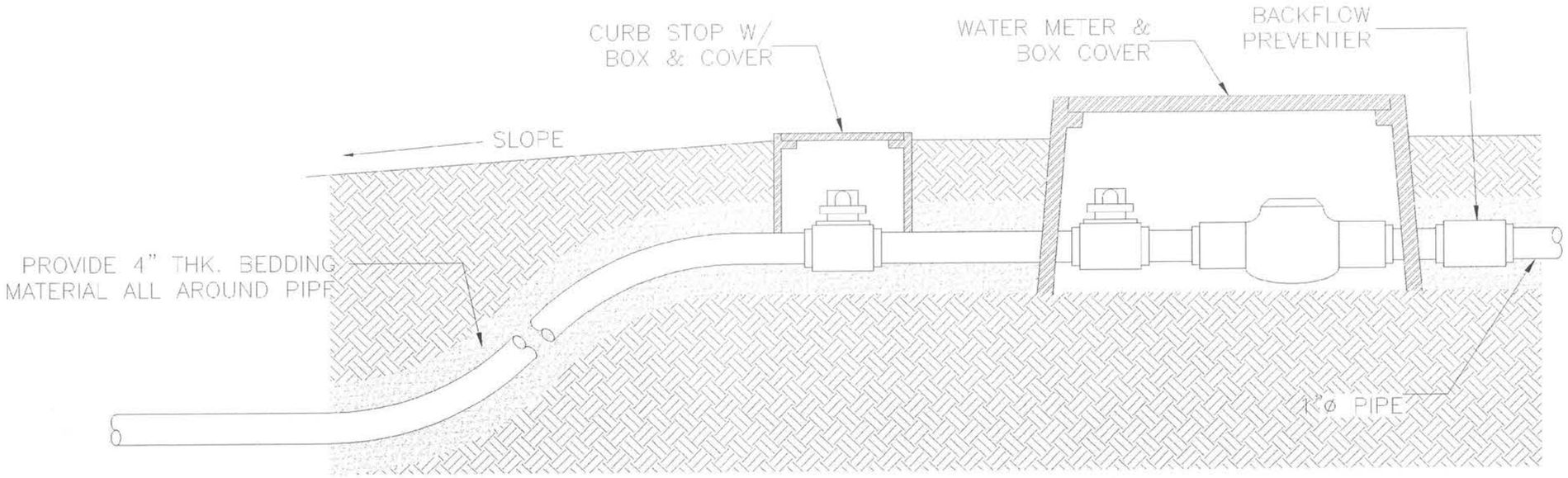

1 C303 **WATER METER DETAIL**
SCALE NTS

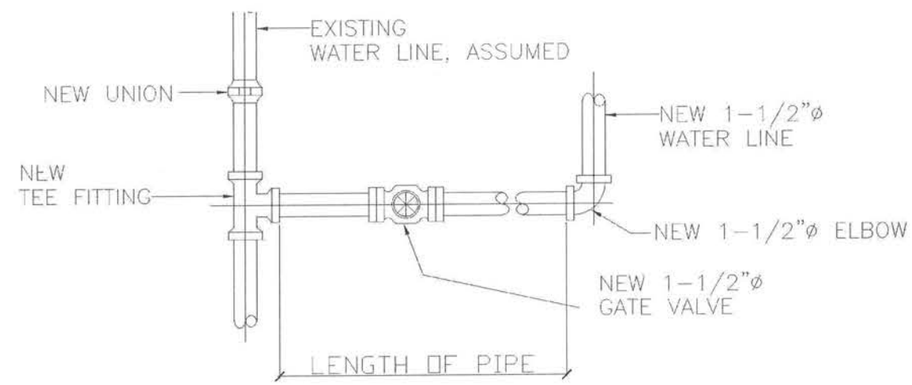

4 C303 **WATERLINE TAPPING CONNECTION**
SCALE NTS

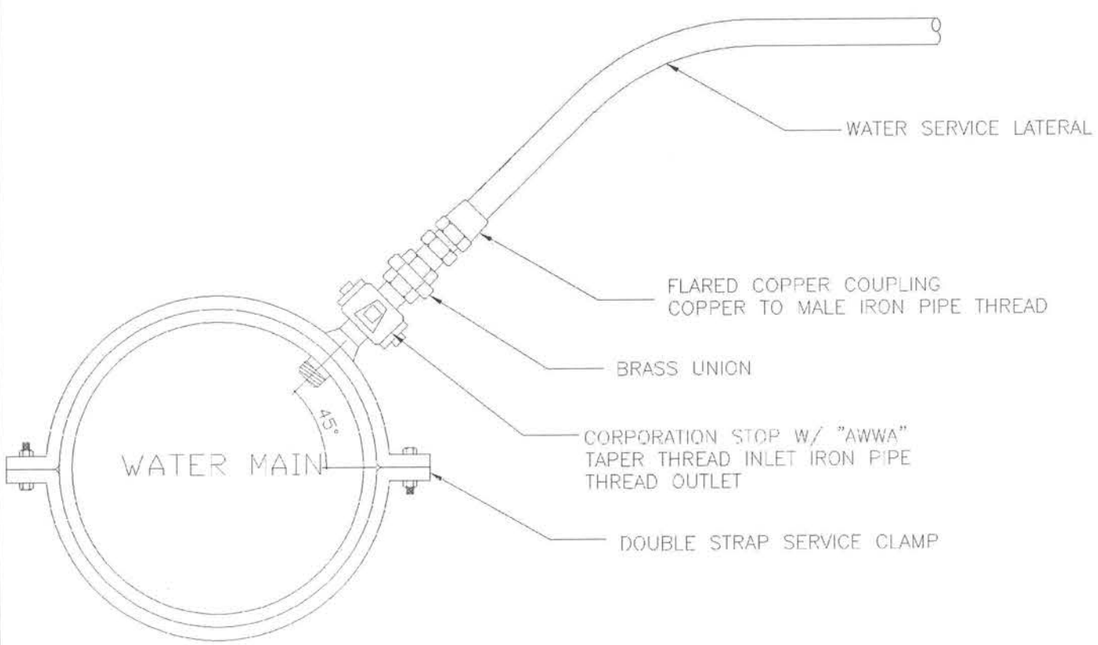

2 C303 **WATER LINE DETAIL**
SCALE NTS

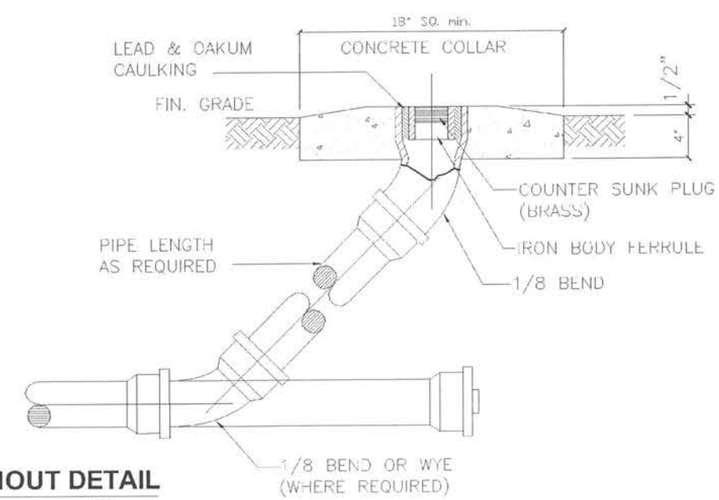

3 C303 **GROUND CLEANOUT DETAIL**
SCALE NTS

E.O.C. Bldg.

R. S. ROQUE
ARCHITECTS
P.O. Box 6
Kolonia, POHNPEI
FSM 96941
Tel. (691) 320-2966
email add.:
archrsroque@yahoo.com
rai_roque@yahoo.com
CONSULTANT
RYAN SALAS ROQUE
PSC 10 002401
PETER PETER
REGISTERED ARCHITECT

Proposed F.S.M./Office of Environment and Emergency Management Bldg.

Palikir, Pohnpei

CONTENTS

DETAILS

Approved

Approved

REVISION	BY

DATE: Feb., 2011
SCALE: AS SHOWN
DRAWN:
JOB:
SHEET
C303