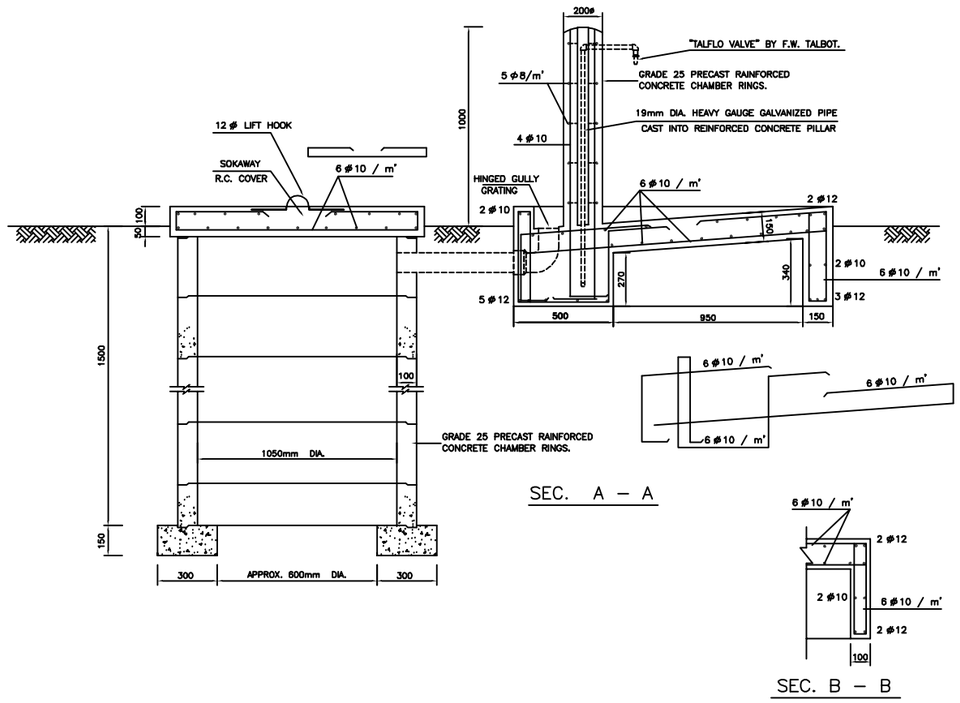

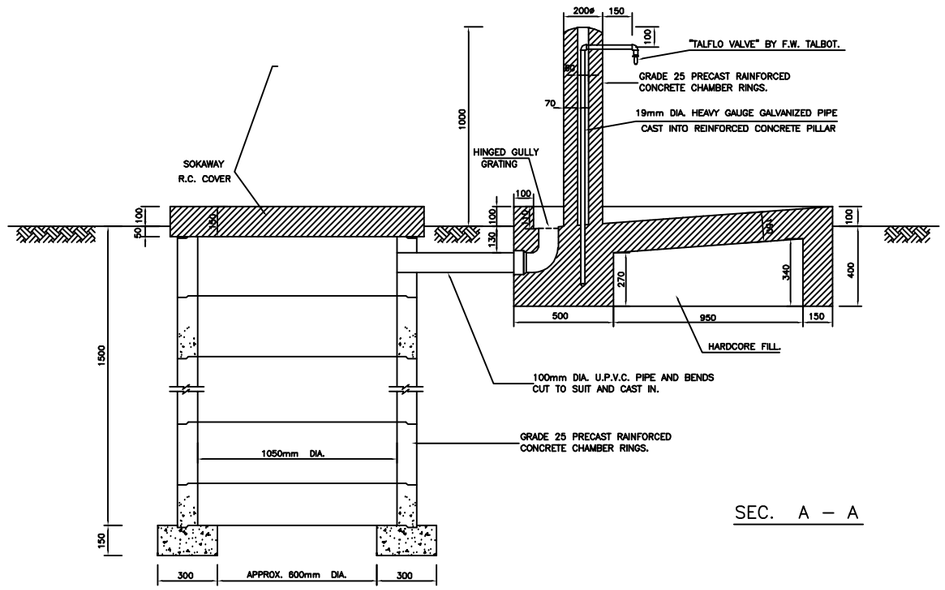

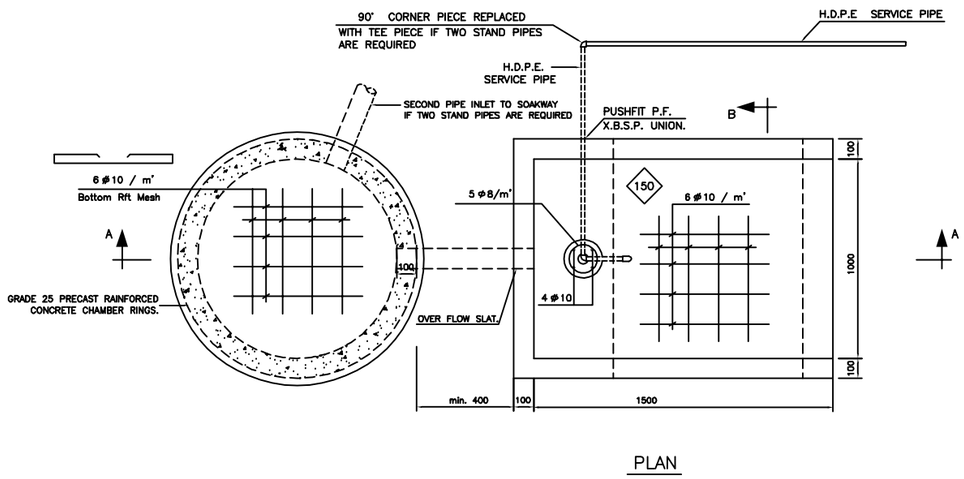

TYPICAL PUBLIC STAND PIPE ARRANGEMENT

(REINFORCEMENT DETAILS)

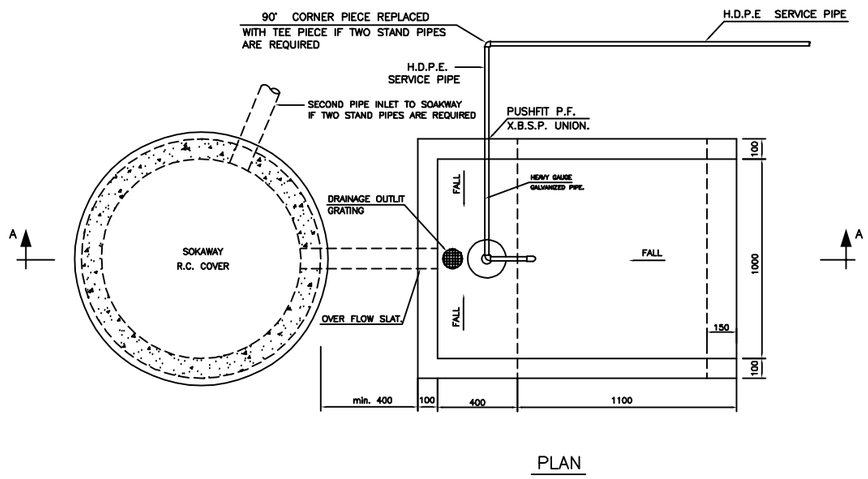

TYPICAL PUBLIC STAND PIPE ARRANGEMENT

(CONCRETE DIMENSIONS)