DWG NO.	REVISION	DRAWING TITLE
N-AR-0000 GENERAL		
N-AR-001	0	DRAWING STANDARD CONVENTION & INDEX
N-AR-002	0	EXTERIOR PERSPECTIVE
N-AR-003	0	INTERIOR PERSPECTIVE
N-AR-004	0	EXISTING SITE PLANS
N-AR-005	0	SITE DEVELOPMENT PLAN
N-AR-006	0	EXISTING SITE LOCATION OF UTILLITIES PLAN
N-AR-007	0	TOPOGRAPHIC SITE PLAN
N-AR-008	0	G/F GENERAL PLAN
N-AR-009	0	CHB ROOF GENERAL PLAN
N-AR-101 CALL-OUTS		
N-AR-101	0	G/F FURNITURE LAYOUT
N-AR-102	0	CONCRETE ROOF PLAN
N-AR-103	0	G/F SPACE CALLOUT & FINISH FLOOR ELEVATION
N-AR-104	0	CHB ROOF SPACE CALLOUT & FINISH FLOOR ELEVATION
N-AR-105	0	G/F DOORS & WINDOWS CALLOUT,WALL CALLOUTS
N-AR-120 FLOOR FINISH PLAN		
N-AR-120	0	G/F FINISH FLOOR TILE PATTERN
N-AR-121	0	CHB FINISH FLR TILE PATTERN
N-AR-130 REFLECTED CEILING PLAN		
N-AR-130	0	G/F REFLECTED CEILING PLAN
N-AR-130 REFLECTED CEILING PLAN		
N-AR-200	0	LEFT & RIGHT ELEVATION
N-AR-201	0	FRONT & REAR ELEVATION
N-AR-202	0	CROSS & LONGITUDINAL SECTION
N-AR-301 SCHEDULE OF DOORS & WINDOWS		
N-AR-301	0	SCHE. OF DOORS & WINDOWS
N-AR-302	0	PARAPET DETAIL
N-AR-401 INTERIOR ELEV.SECTION DETAILS		
N-AR-401	0	MALE TOILET ELEVATION
N-AR-402	0	PWD TOILET ELEVATION
N-AR-403	0	FEMALE TOILET ELEVATION
N-AR-404	0	OFFICE PLAN AND ELEVATION
N-AR-405	0	OFFICE PLAN AND ELEVATION
N-AR-501 SCHEDULE OF FINISHES		
N-AR-501	0	SCHEDULE OF FINISHES
N-AR-601 PARAPET DETAILS		
N-AR-601	0	PARAPET DETAILS/ WINDOW DETAILS
N-AR-602	0	SCHEDULE OF GRILLS

R.S.ROQUE ARCHITECTS & CONSTRUCTION SERVICES

. ARCHITECTURAL

PROPOSED DECEM/NEOC BLDG EXPANSION & REFURBISH (PALIKIR GOV. CAMPUS)

1 A 001 **PERSPECTIVE (FRONT VIEW)**
SCALE NTS

From the People of Japan

1 A 001 **PERSPECTIVE-(NORMAL VIEW)**
SCALE NTS

2 A 002 **PERSPECTIVE-(FRONT VIEW)**
SCALE NTS

3 A 002 **PERSPECTIVE-(AERIAL VIEW)**
SCALE NTS

4 A 002 **PERSPECTIVE-(REAR VIEW)**
SCALE NTS

ARCHITECTS
P.O. Box 6
Kolonia, POHNPEI
FSM 96941
Tel. (691) 320-2966
email add.:
arohrarogue@yahoo.com

CONSULTANT

PROPOSED DECEM/NEOC BLDG EXPANSION & REFURBISHING (PALIKIR GOV.CAMPUS)

CONTENTS
- EXISTING SITE PLAN

Approved

Approved

REVISION	BY

DATE: SEPTEMBER 2020
SCALE: AS SHOWN
DRAWN:
JOB:
SHEET
A-002

1 A 003 **PERSPECTIVE-OFFICE SECRETARY**
SCALE NTS

2 A 003 **PERSPECTIVE-OPEN OFFICE SPACE**
SCALE NTS

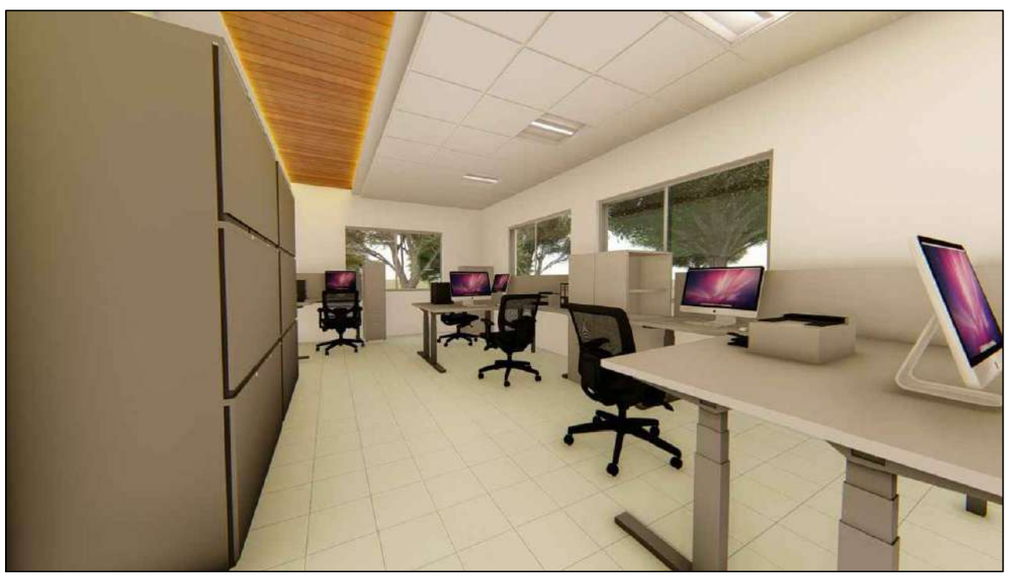

3 A 003 **PERSPECTIVE-OPEN OFFICE SPACE**
SCALE NTS

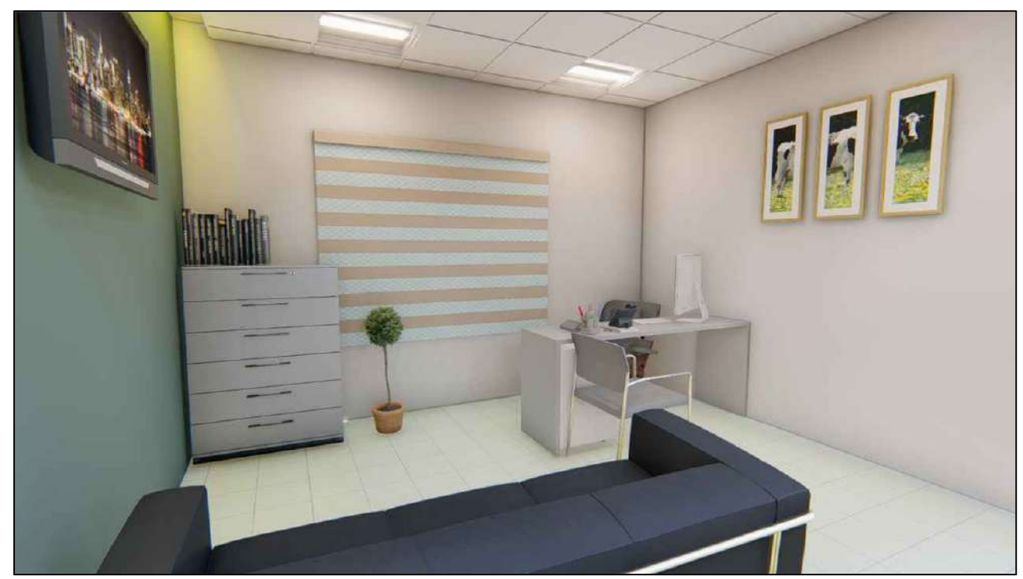

4 A 003 **PERSPECTIVE-OFFICE SECRETARY**
SCALE NTS

ARCHITECTS
P.O. Box 6
Kolonia, POHNPEI
FSM 96941
Tel. (691) 320-2966
email add.:
arohrarsque@yahoo.com

CONSULTANT

RYAN SALAS ROQUE
PTC NO.0024015
PHILIPPINES
REGISTERED ARCHITECT

PROPOSED DECEM/NEOC BLDG EXPANSION & REFURBISHING (PALIKIR GOV.CAMPUS)

CONTENTS

INTERIOR PERSPECTIVE

Approved

Approved

REVISION	BY

DATE: SEPTEMBER 2020
SCALE: AS SHOWN
DRAWN:
JOB:
SHEET
A-003

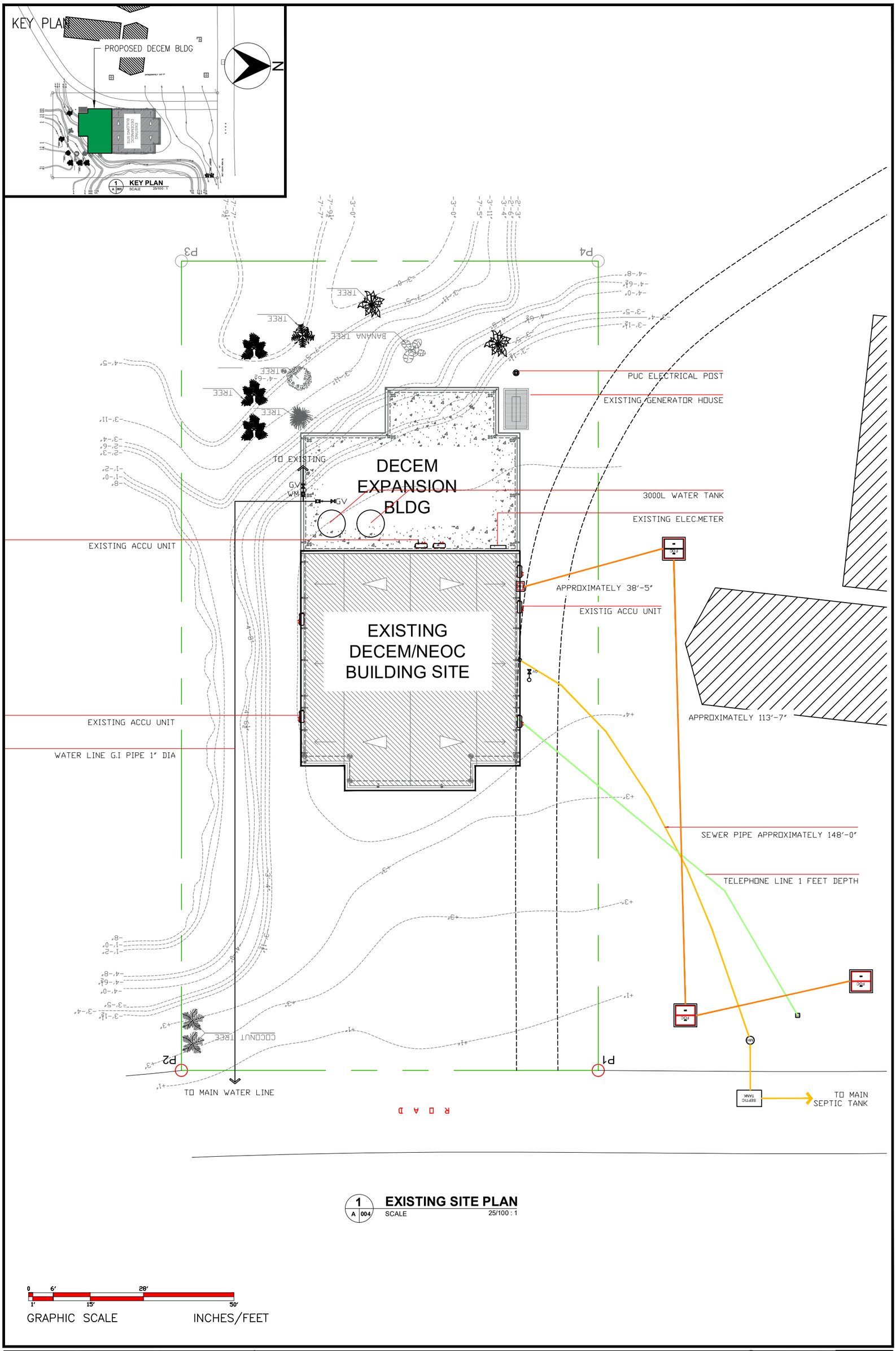

1 A 004 **EXISTING SITE PLAN**
SCALE 25/100 : 1

0 6' 28'
1' 15' 50'
GRAPHIC SCALE INCHES/FEET

PROPOSED DECEM/NEOC BLDG EXPANSION & REFURBISHING (PALIKIR GOV.CAMPUS)

CONTENTS – EXISTING SITE PLAN

Approved
Approved

REVISION | BY

DATE: SEPTEMBER 2020
SCALE: AS SHOWN
DRAWN:
JOB:
SHEET A-004

ARCHITECTS
P.O. Box 6
Kolonia, Pohnpei
FSM 96941
Tel. (691) 320-2666
email: rdai@yahoo.com
CONSULTANT

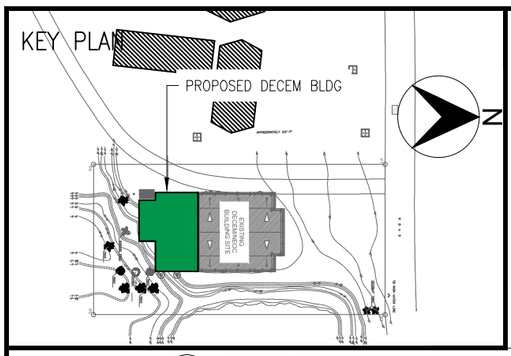

1 A 005 **KEY PLAN**
SCALE 25/100 : 1

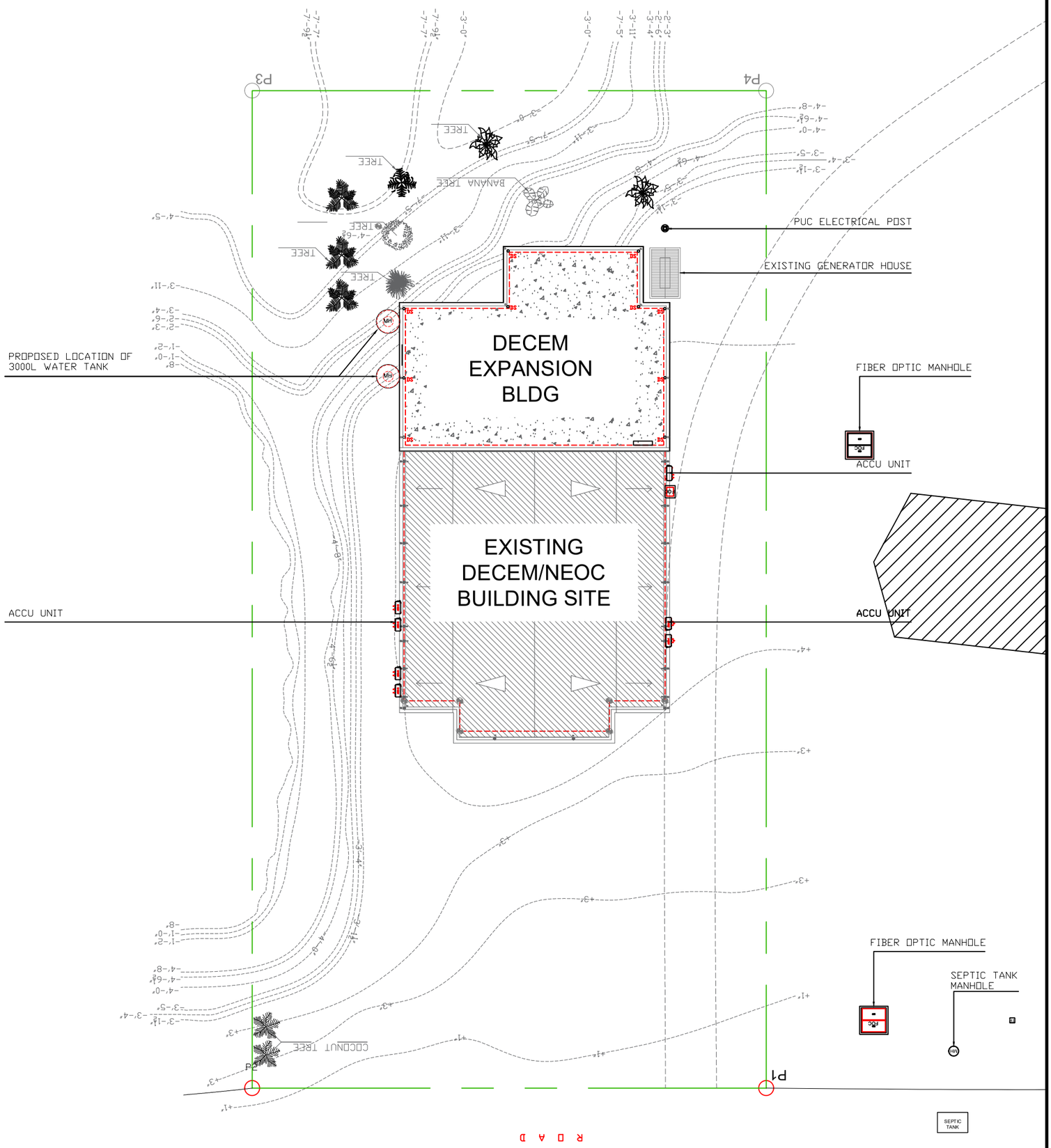

1 A 005 **SITE DEVELOPMENT PLAN**
SCALE 25/100 : 1

0 6′ 28′
1′ 15′ 50′
GRAPHIC SCALE INCHES/FEET

SHEET	A-005
JOB:	
DRAWN:	
DATE: SEPTEMBER 2020	
SCALE: AS SHOWN	
REVISION	
BY	
Approved	
Approved	
CONTENTS	SITE DEVELOPMENT PLAN

PROPOSED DECEM/NEOC BLDG EXPANSION & REFURBISHING (PALIKIR GOV.CAMPUS)

ARCHITECTS
P.O. Box 6
Palikir, Pohnpei
FSM 96941
Tel. (691) 320-2666
email: odai@fsmpo.com
CONSULTANT

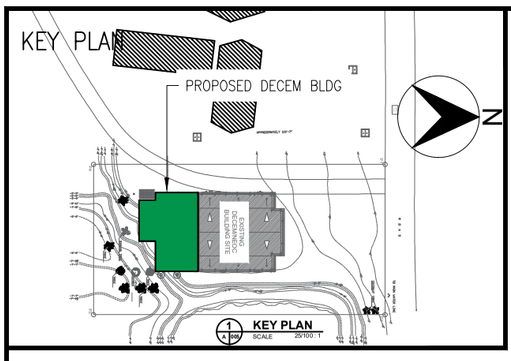

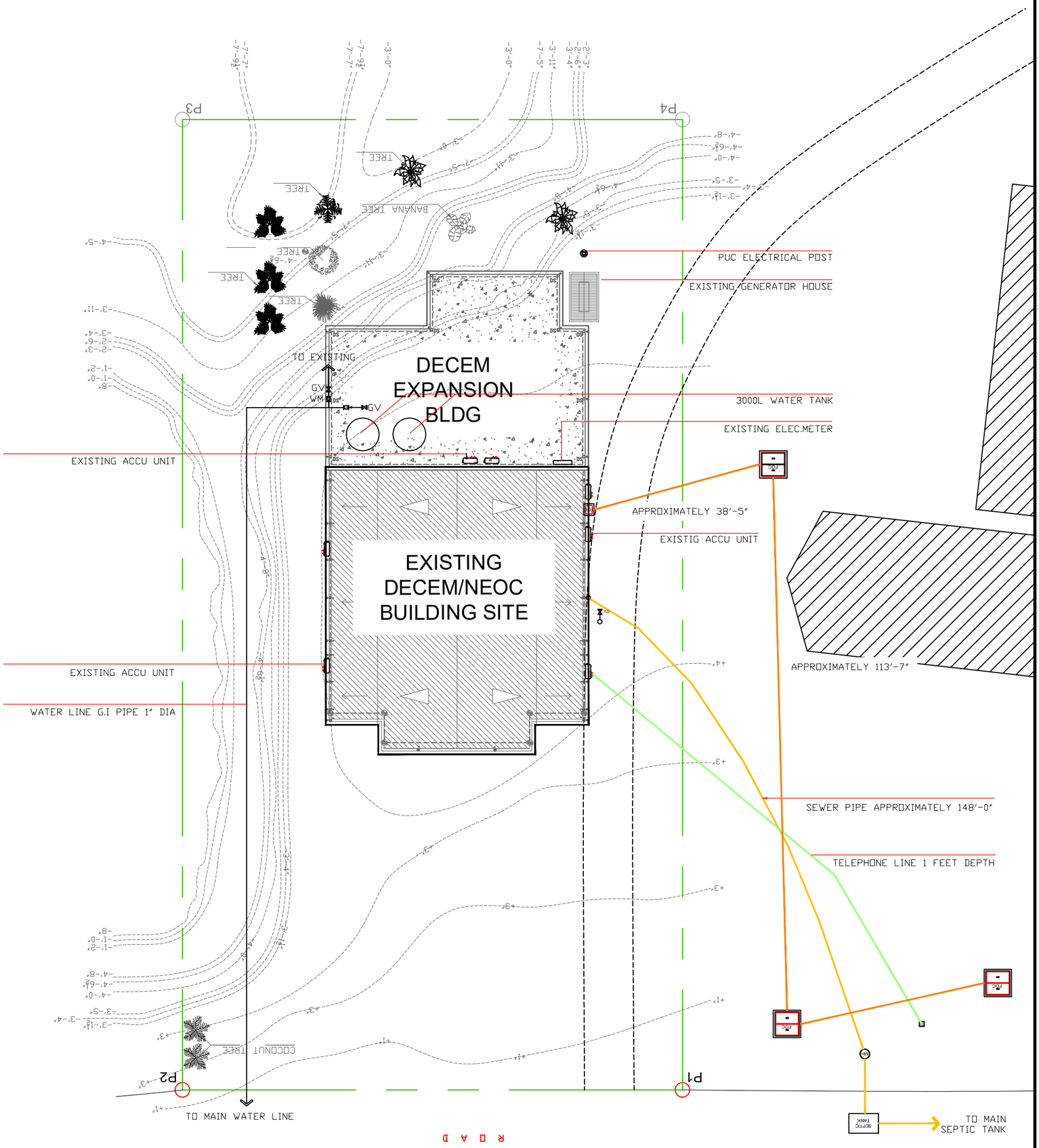

1 A 006 **EXISTING SITE UTILITIES PLAN**
SCALE 25/100 : 1

0 6' 28'
1' 15' 50'
GRAPHIC SCALE INCHES/FEET

SHEET	A-006	REVISION	BY	Approved	Approved	CONTENTS - EXISTING SITE UTILITIES PLAN	PROPOSED DECEM/NEOC BLDG EXPANSION & REFURBISHING (PALIKIR GOV.CAMPUS)
JOB:							
DRAWN:							
SCALE: AS SHOWN							
DATE: SEPTEMBER 2020							

CONSULTANT
ARCHITECTS
P.O. Box 6
Palikir, Pohnpei
FSM 96941
Tel. (691) 320-2666
email: oda-fsm@yahoo.com

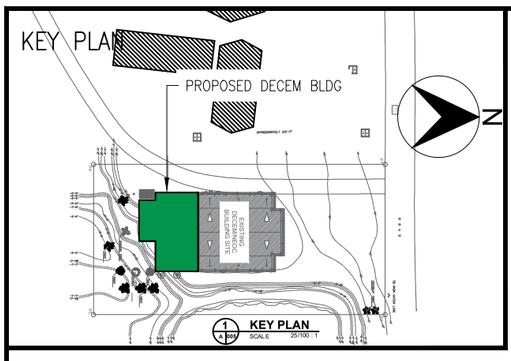

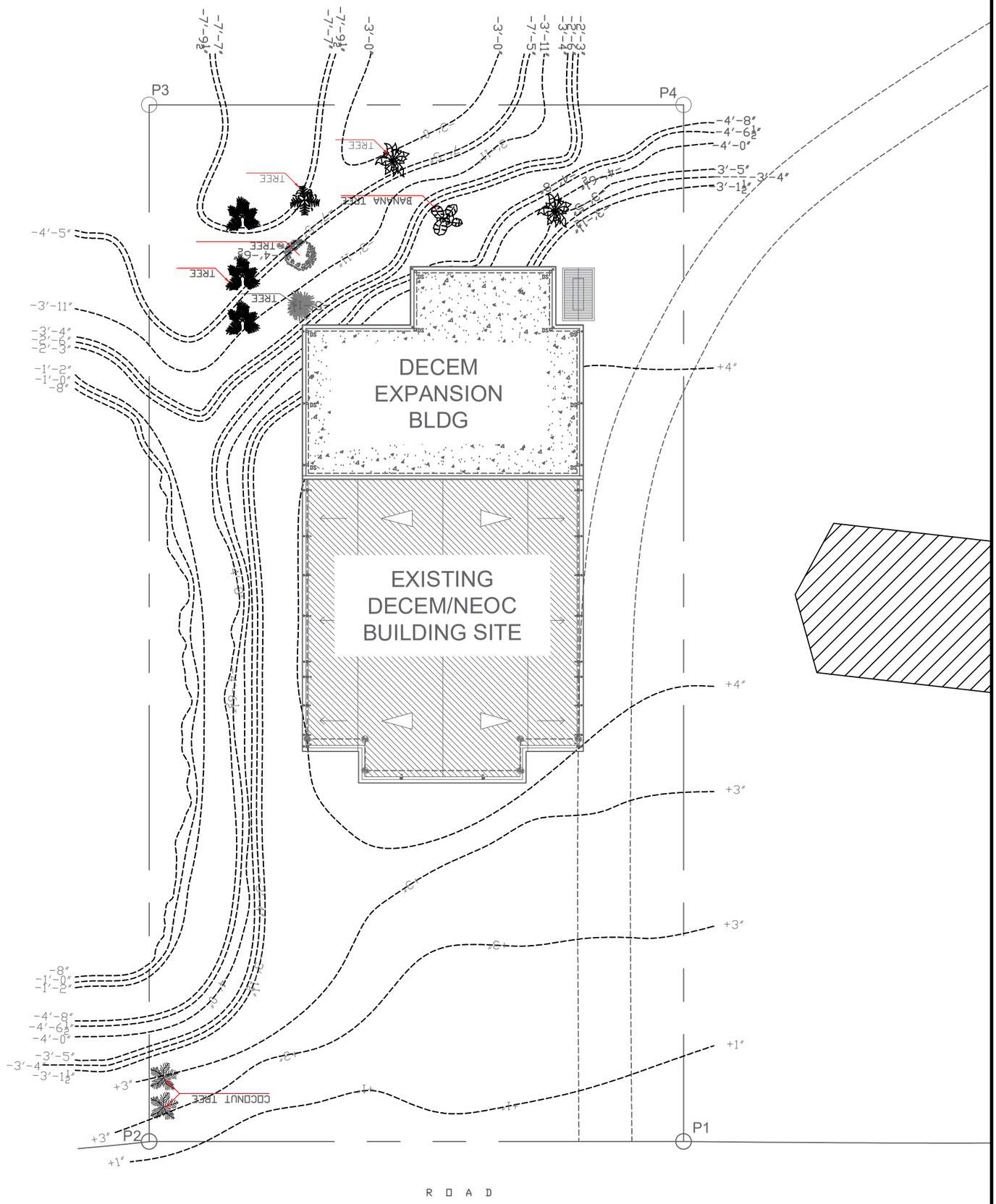

1 A 007 **TOPOGRAPHIC SITE PLAN**
SCALE 25/100 : 1

0 6' 28'
1' 15' 50'
GRAPHIC SCALE INCHES/FEET

CONTENTS	TOPOGRAPHIC SITE PLAN
Approved	
Approved	
REVISION	BY
DATE: SEPTEMBER 2020	
SCALE: AS SHOWN	
DRAWN:	
JOB:	
SHEET	A-007

PROPOSED DECEM/NEOC BLDG EXPANSION & REFURBISHING (PALIKIR GOV.CAMPUS)

ARCHITECTS
P.O. Box 6
Palikir, Pohnpei
FSM 96941
Tel. (691) 320-2666
email: rdai@yahoo.com
CONSULTANT

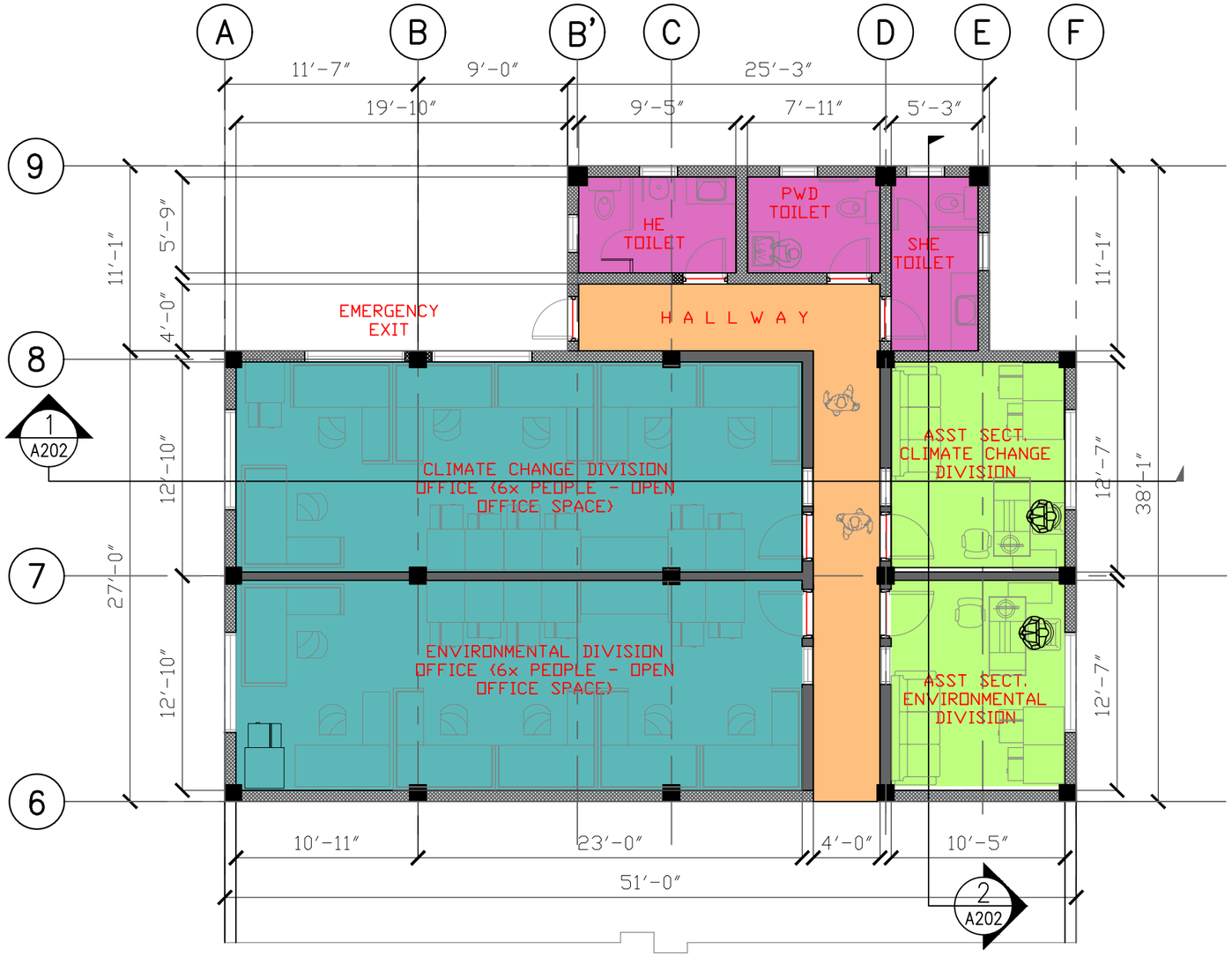

1 A 008 **GROUND FLOOR GENERAL PLAN**
SCALE 1/8 : 1

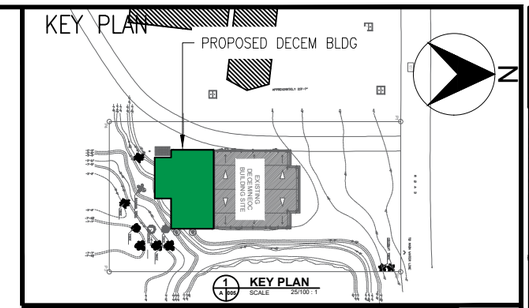

ROOM NAME	AREA	NOTES
FIRST FLOOR		
AMENITIES		
CLIMATE CHANGE DIVISION OFFICE	426 SF	
ENVIRONMENTAL CHANGE DIVISION OFFICE	426 SF	
ASST SECT. CLIMATE CHANGE DIVISION	131 SF	
ASST SECT.ENVIRONMENTAL DIVISION	131 SF	
MALE TOILET	54 SF	
FEMALE TOILET	54 SF	
PWD TOILET	46 SF	
HALLWAY	180 SF	
TOTAL FLOOR AREA	1494 SF	
COLUMN & WALL AREA	163 SF	
TOTAL AREA OF GF	1657 square feet	

ARCHITECTS
P.O. Box 6
Kolonia, POHNPEI
FSM 96941
Tel. (691) 320-2966
email add.:
arohsroque@yahoo.com

CONSULTANT

RYAN SALAS ROQUE
PTR NO.0024015
PHILIPPINES
REGISTERED ARCHITECT

PROPOSED DECEM/NEOC BLDG EXPANSION & REFURBISHING (PALIKIR GOV.CAMPUS)

CONTENTS

GROUND FLOOR PLAN
GENERAL PLAN

Approved

Approved

REVISION	BY

DATE: SEPTEMBER 2020
SCALE: AS SHOWN
DRAWN:
JOB:
SHEET
A-008

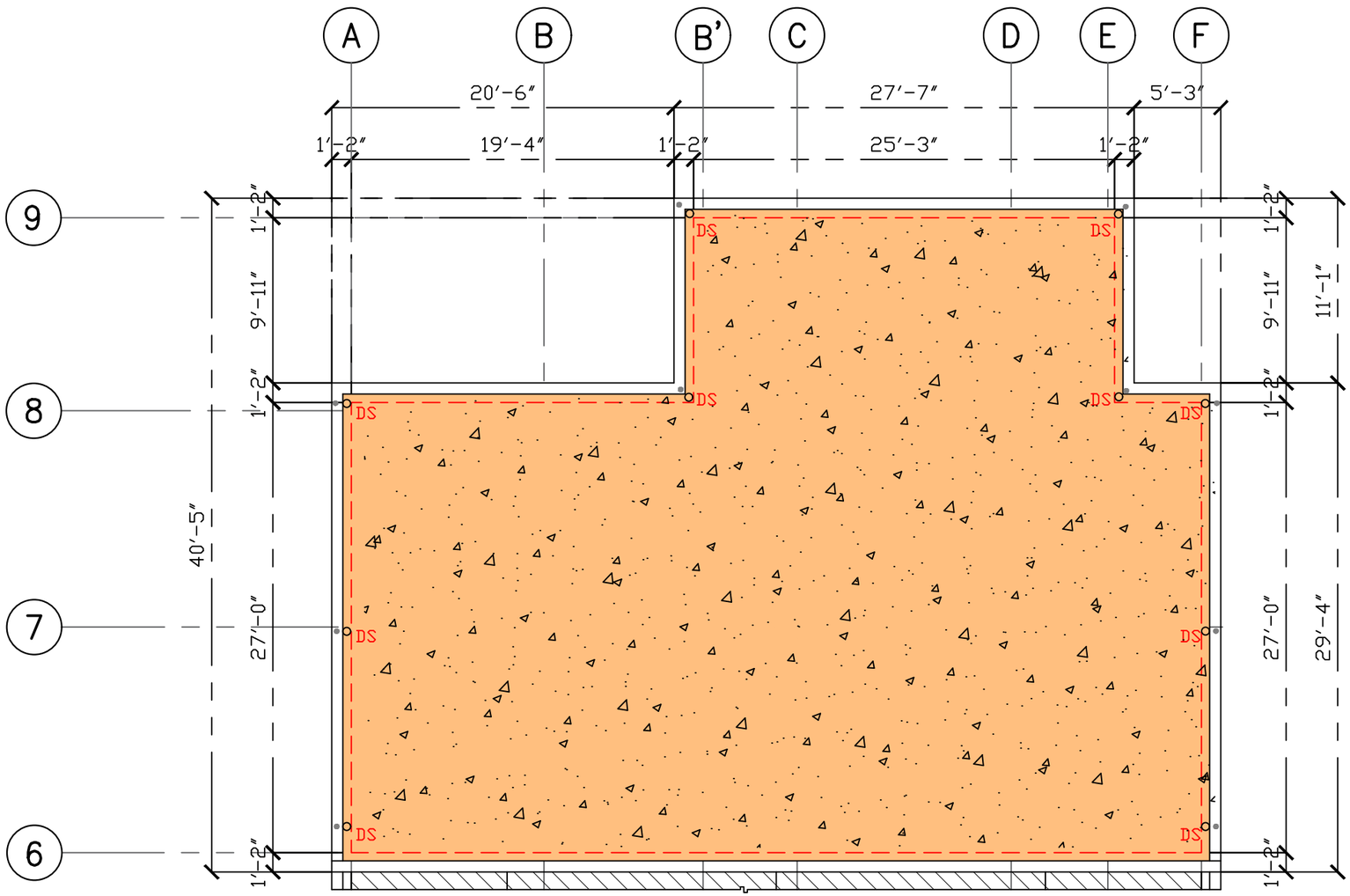

1 A 009 **CONCRETE ROOF GENERAL PLAN**
SCALE 1/8 : 1

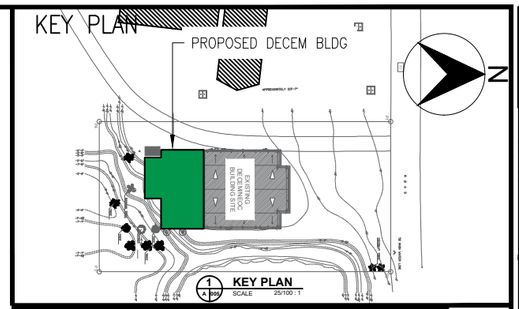

ROOM NAME	AREA	NOTES
FIRST FLOOR		
AMENITIES		
CONCRETE ROOF GENERAL PLAN	1870 SF	
TOTAL AREA OF GF	1657 square feet	

ARCHITECTS
P.O. Box 6
Kolonia, POHNPEI
FSM 96941
Tel. (691) 320-2966
email add.:
arohrarsoque@yahoo.com

CONSULTANT

ROYAL SALAS ROQUE
PTC NO.0024015
PHILIPPINES
REGISTERED ARCHITECT

PROPOSED DECEM/NEOC BLDG EXPANSION & REFURBISHING (PALIKIR GOV.CAMPUS)

CONTENTS
CONCRETE ROOF GENERAL PLAN

Approved

Approved

REVISION	BY

DATE: SEPTEMBER 2020
SCALE: AS SHOWN
DRAWN:
JOB:
SHEET
A-009

WALL KEY

- MASONRY BLOCK
- STEEL STUD
- LOW WALL
- GLASS PARTITION /WINDOW

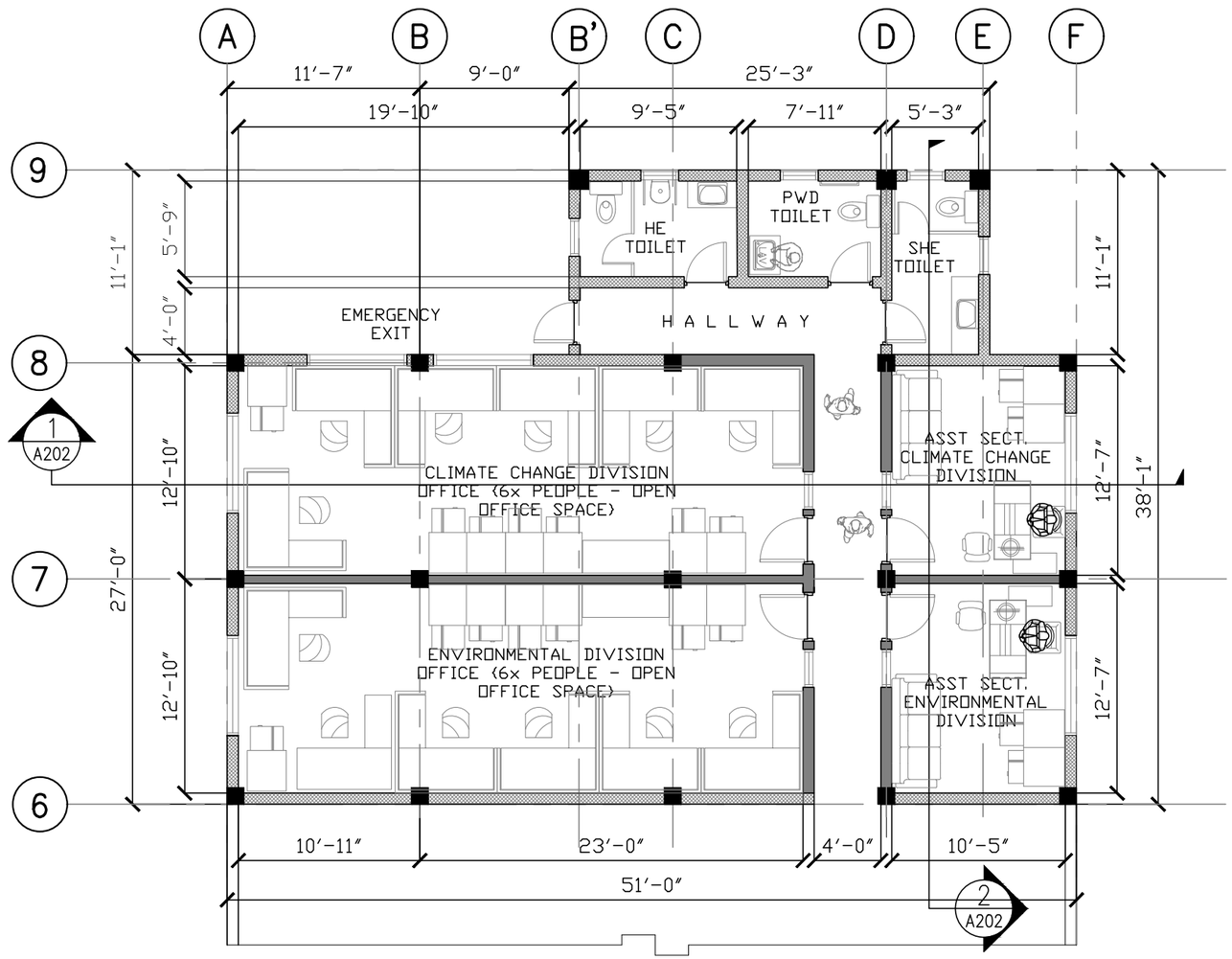

1 / A 101 **GROUND FLOOR FURNITURE LAYOUT**
SCALE 1/8 : 1

1' 10' 20'
5' 15'
GRAPHIC SCALE INCHES/FEET

ARCHITECTS
P.O. Box 6
Kolonia, POHNPEI
FSM 96941
Tel. (691) 320-2966
email add.:
archrsroque@yahoo.com

CONSULTANT

RYAN SALAS ROQUE
REG. NO.0024015
PHILIPPINES
REGISTERED ARCHITECT

PROPOSED DECEM/NEOC BLDG EXPANSION & REFURBISHING (PALIKIR GOV.CAMPUS)

CONTENTS
GROUND FLOOR PLAN FURNITURE LAYOUT

Approved

Approved

REVISION	BY

DATE: SEPTEMBER 2020
SCALE: AS SHOWN
DRAWN:
JOB:
SHEET
A-101

WALL KEY

- MASONRY BLOCK
- STEEL STUD
- LOW WALL
- GLASS PARTITION /WINDOW

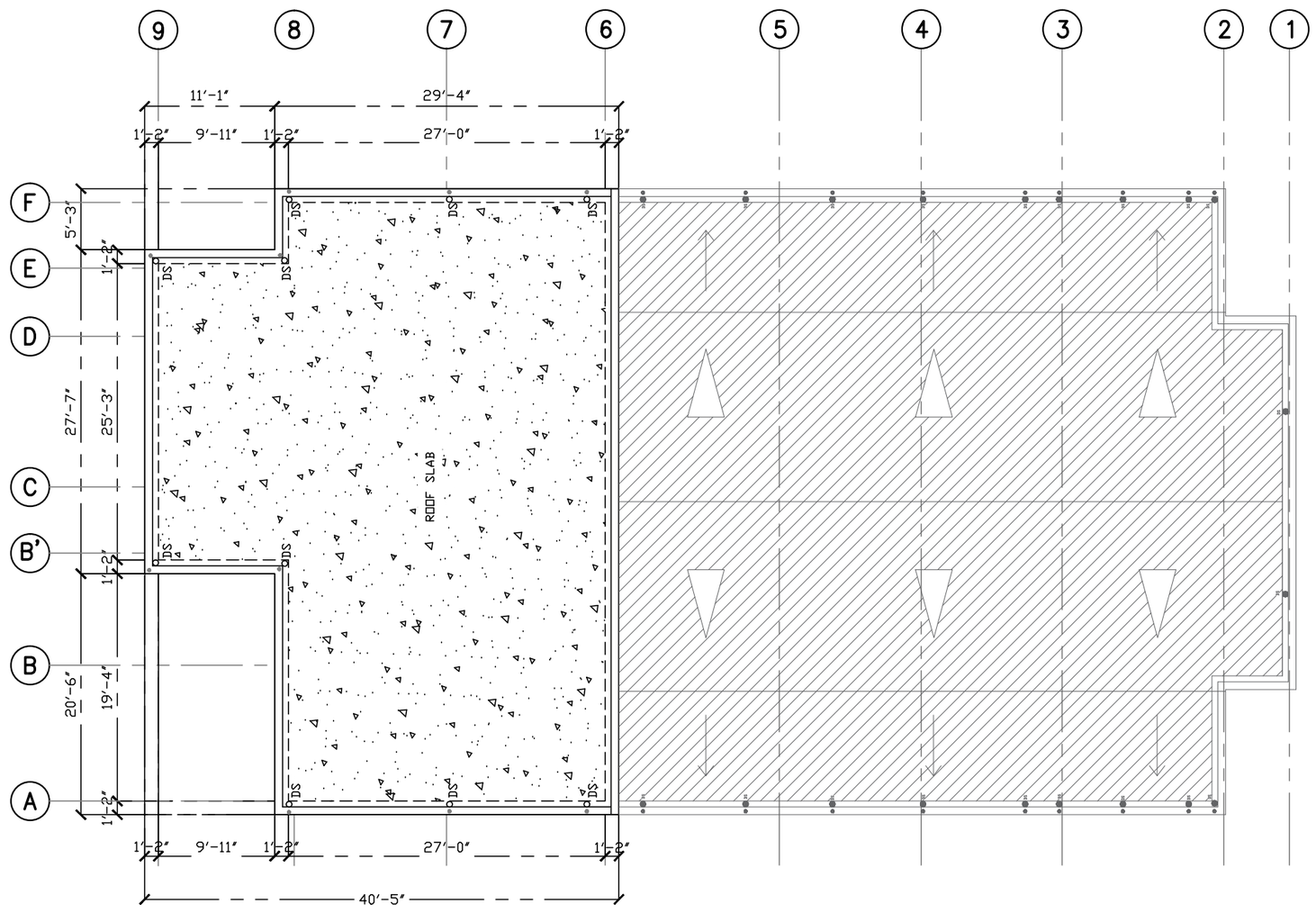

1 / A 102 **CONCRETE ROOF PLAN**

SCALE 3/32 : 1

ARCHITECTS
P.O. Box 6
Kolonia, POHNPEI
FSM 96941
Tel. (691) 320-2966
email add.:
archrsroque@yahoo.com

CONSULTANT

RYAN SALAS ROQUE
REG NO.0024015
PHILIPPINES
REGISTERED ARCHITECT

PROPOSED DECEM/NEOC BLDG EXPANSION & REFURBISHING (PALIKIR GOV.CAMPUS)

CONTENTS

CONCRETE ROOF PLAN

Approved

Approved

REVISION	BY

DATE: SEPTEMBER 2020

SCALE: AS SHOWN

DRAWN:

JOB:

SHEET

A-102

WALL KEY

- MASONRY BLOCK
- STEEL STUD
- LOW WALL
- GLASS PARTITION /WINDOW

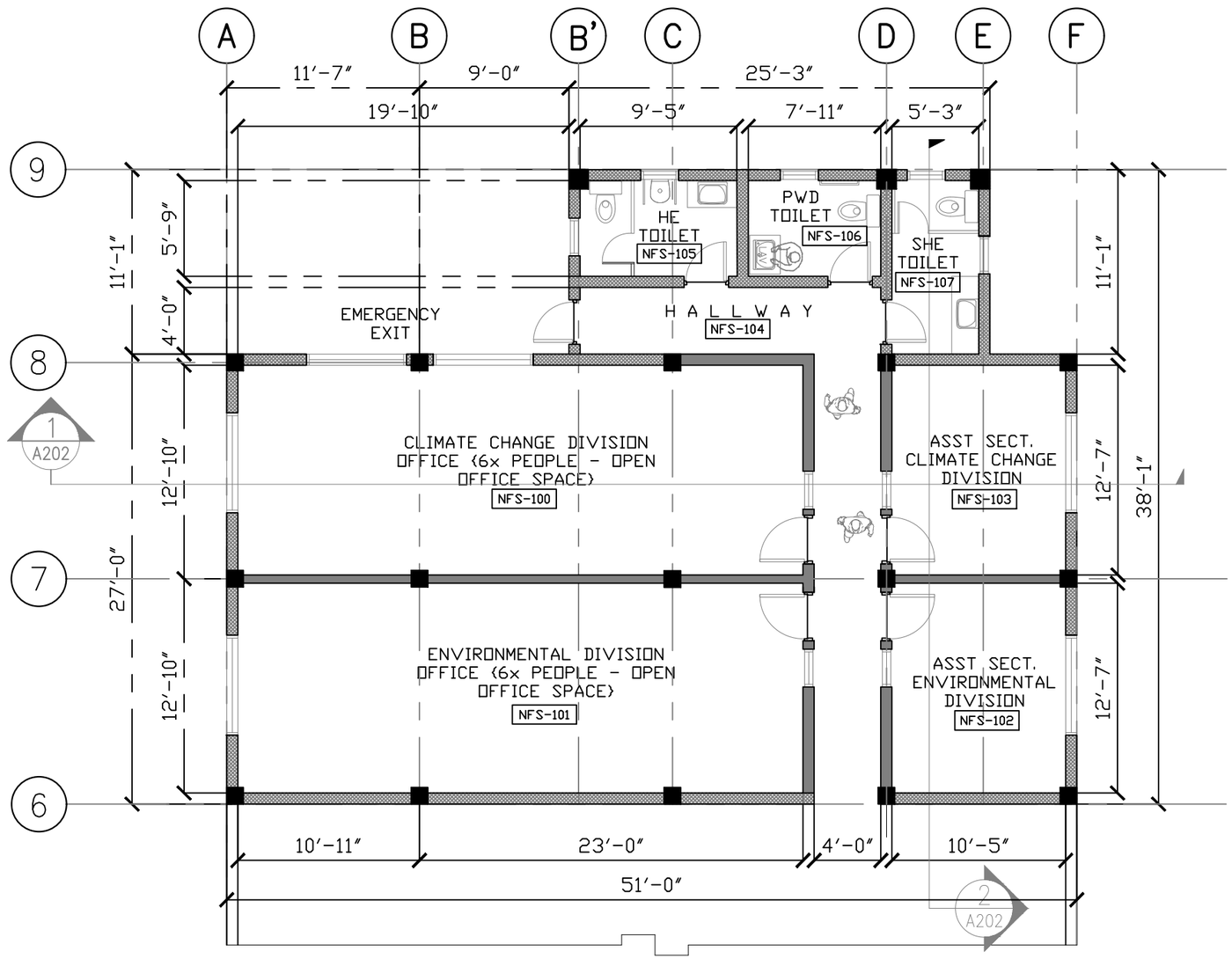

1 / A 103 G/F SPACE CALLOUT & FINISH FLR ELEVATION

SCALE 1/8 : 1

1' 5' 10' 15' 20'

GRAPHIC SCALE INCHES/FEET

ARCHITECTS

P.O. Box 6
Kolonia, POHNPEI
FSM 96941
Tel. (691) 320-2966
email add.:
arohrarogue@yahoo.com

CONSULTANT

ROHAI SALAS ROGUE
PTRC NO.0024015
PHILIPPINES
REGISTERED ARCHITECT

PROPOSED DECEM/NEOC BLDG EXPANSION & REFURBISHING (PALIKIR GOV.CAMPUS)

CONTENTS

G/F SPACE CALLOUT & FIN. FLOOR ELEVATION

Approved

Approved

REVISION	BY

DATE: SEPTEMBER 2020

SCALE: AS SHOWN

DRAWN:

JOB:

SHEET

A-103

WALL KEY

- MASONRY BLOCK
- STEEL STUD
- LOW WALL
- GLASS PARTITION /WINDOW

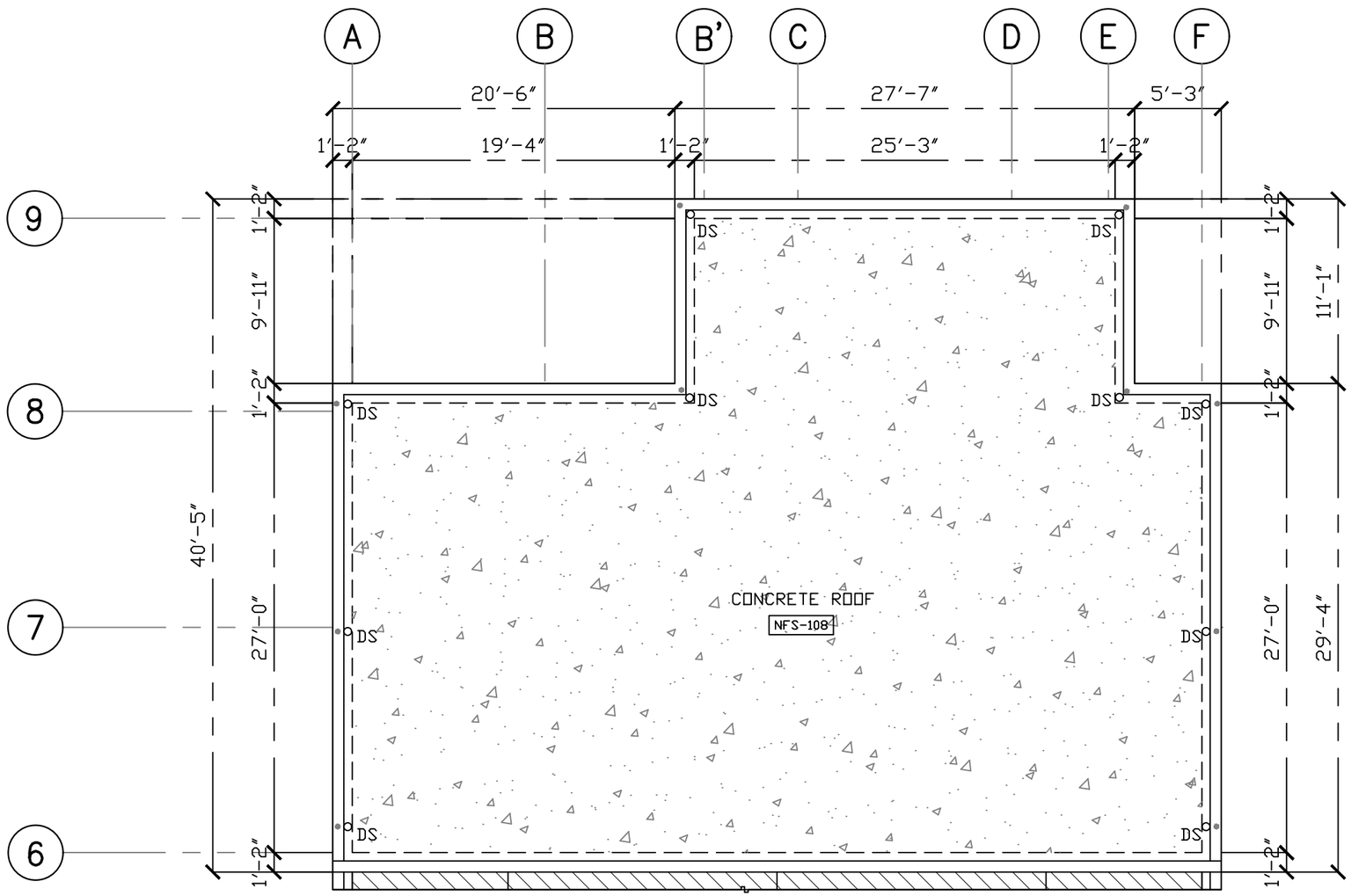

1 / A 104 CONCRETE ROOF PLAN

SPACE CALLOUT & FINISH FLR ELEVATION

SCALE 1/8 : 1

GRAPHIC SCALE INCHES/FEET

ARCHITECTS
P.O. Box 6
Kolonia, PONHPEI
FSM 96941
Tel. (691) 320-2966
email add.:
arohrarogue@yahoo.com

CONSULTANT

ARAI SALAS ROGUE
PTRC NO.0024015
PHILIPPINES
REGISTERED ARCHITECT

PROPOSED DECEM/NEOC BLDG EXPANSION & REFURBISHING (PALIKIR GOV.CAMPUS)

CONTENTS

SPACE CALLOUT & FINISH FLR ELEVATION

Approved

Approved

REVISION	BY

DATE: SEPTEMBER 2020

SCALE: AS SHOWN

DRAWN:

JOB:

SHEET

A-104

WALL KEY

- MASONRY BLOCK
- STEEL STUD
- LOW WALL
- GLASS PARTITION /WINDOW

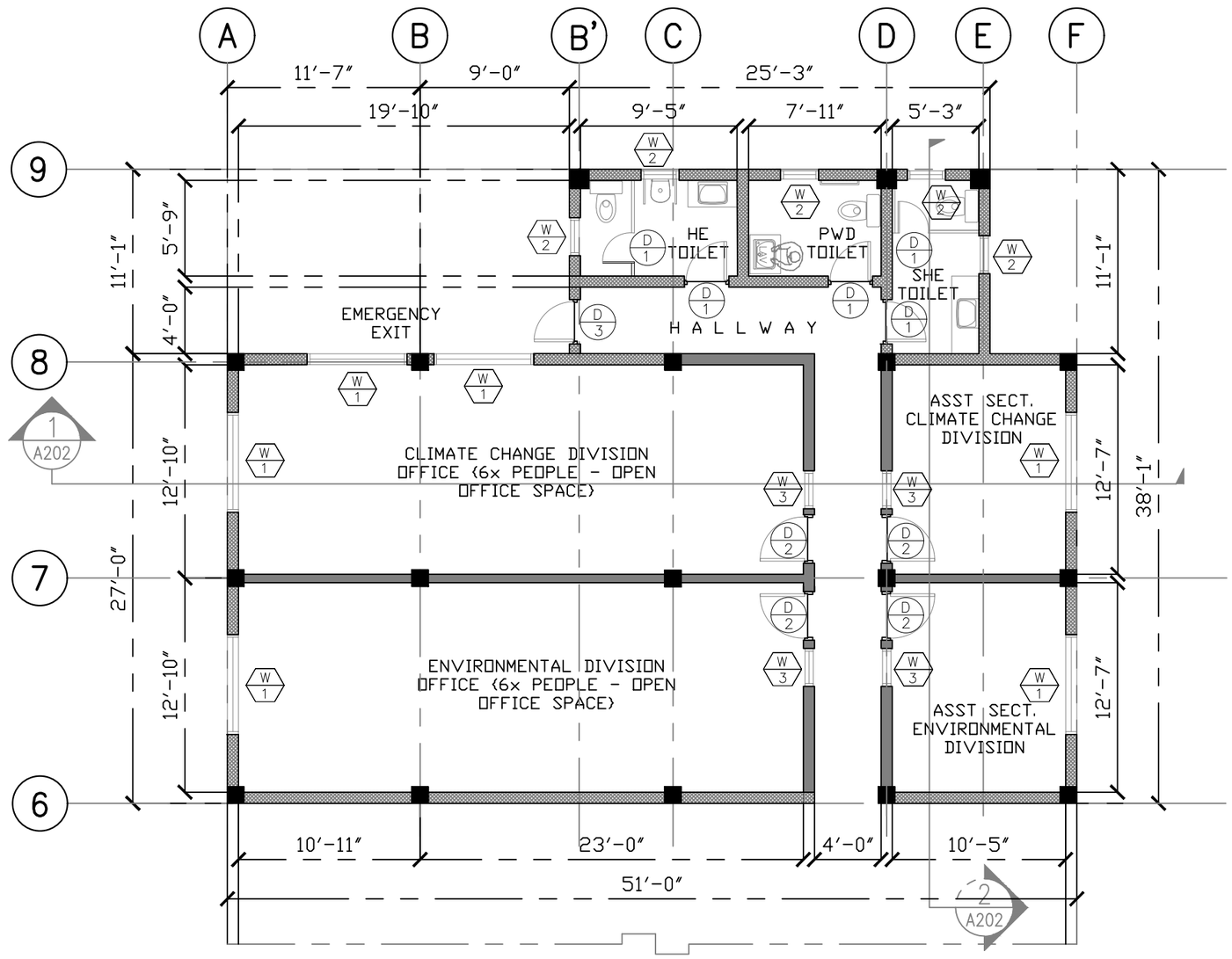

1 / A 105 GROUND FLOOR PLAN

DOORS & WINDOWS CALLOUT, WALL CALLOUTS

SCALE 1/8 : 1

1' 5' 10' 15' 20'
GRAPHIC SCALE INCHES/FEET

ARCHITECTS
P.O. Box 6
Kolonia, PONHPEI
FSM 96941
Tel. (691) 320-2966
email add.:
arohrarogue@yahoo.com

CONSULTANT

RYAN SALAS ROGUE
PTRC NO.0024015
PHILIPPINES
REGISTERED ARCHITECT

PROPOSED DECEM/NEOC BLDG EXPANSION & REFURBISHING (PALIKIR GOV.CAMPUS)

CONTENTS
DOOR & WINDOW CALLOUTS

Approved

Approved

REVISION	BY

DATE: SEPTEMBER 2020
SCALE: AS SHOWN
DRAWN:
JOB:
SHEET
A-105

WALL KEY

- MASONRY BLOCK
- STEEL STUD
- LOW WALL
- GLASS PARTITION /WINDOW

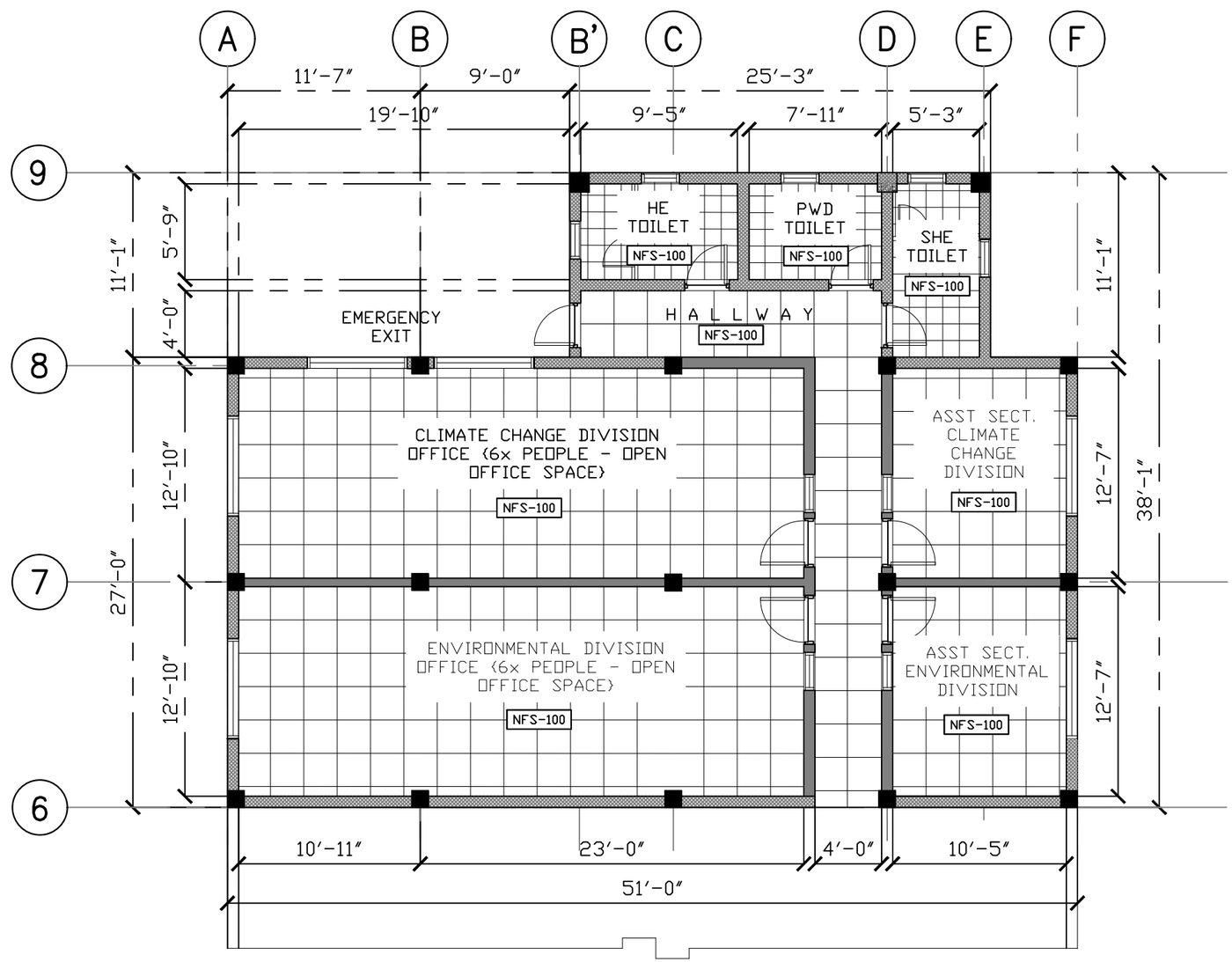

1 / A 120

GROUND FLOOR PLAN

G/F FINISH FLOOR TILE PATTERN

SCALE 1/8 : 1

1' 5' 10' 15' 20'

GRAPHIC SCALE INCHES/FEET

ARCHITECTS
P.O. Box 6
Kolonia, PONNPEI
FSM 96941
Tel. (691) 320-2966
email add.:
arohrarogue@yahoo.com

CONSULTANT

ROHAI SALAS ROGUE
PTRC NO.0024015
PHILIPPINES
REGISTERED ARCHITECT

PROPOSED DECEM/NEOC BLDG EXPANSION & REFURBISHING (PALIKIR GOV.CAMPUS)

CONTENTS

G/F FIN FLOOR TILE PATTERN

Approved

Approved

REVISION	BY

DATE: SEPTEMBER 2020

SCALE: AS SHOWN

DRAWN:

JOB:

SHEET

A-102

WALL KEY

- MASONRY BLOCK
- STEEL STUD
- LOW WALL
- GLASS PARTITION /WINDOW

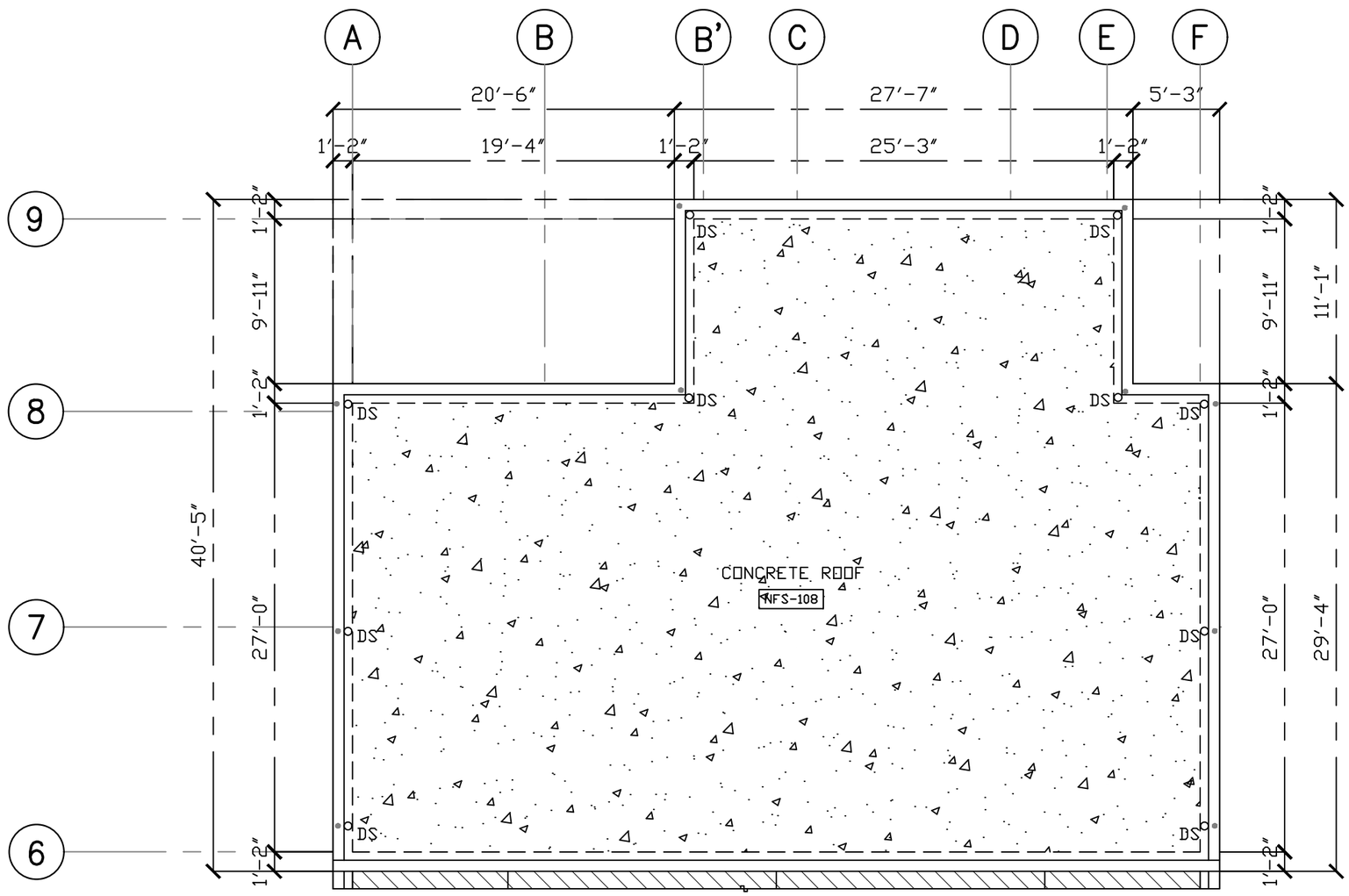

CONCRETE ROOF PLAN

1 / A 121

FINISH FLOOR TILE PATTERN

SCALE 1/8 : 1

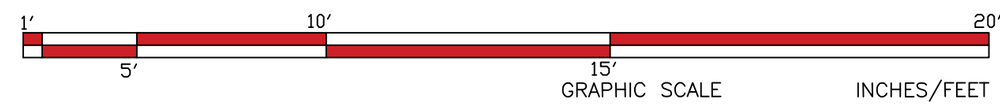

ARCHITECTS
P.O. Box 6
Kolonia, PONHPEI
FSM 96941
Tel. (691) 320-2966
email add.:
arohrarogue@yahoo.com

CONSULTANT

ROHAI SALAS ROGUE
REG NO.0024015
PHILLIPPINES
REGISTERED ARCHITECT

PROPOSED DECEM/NEOC BLDG EXPANSION & REFURBISHING (PALIKIR GOV.CAMPUS)

CONTENTS

FINISH FLOOR TILE PATTERN

Approved

Approved

REVISION	BY

DATE: SEPTEMBER 2020

SCALE: AS SHOWN

DRAWN:

JOB:

SHEET

A-121

WALL KEY

- MASONRY BLOCK
- STEEL STUD
- LOW WALL
- GLASS PARTITION /WINDOW

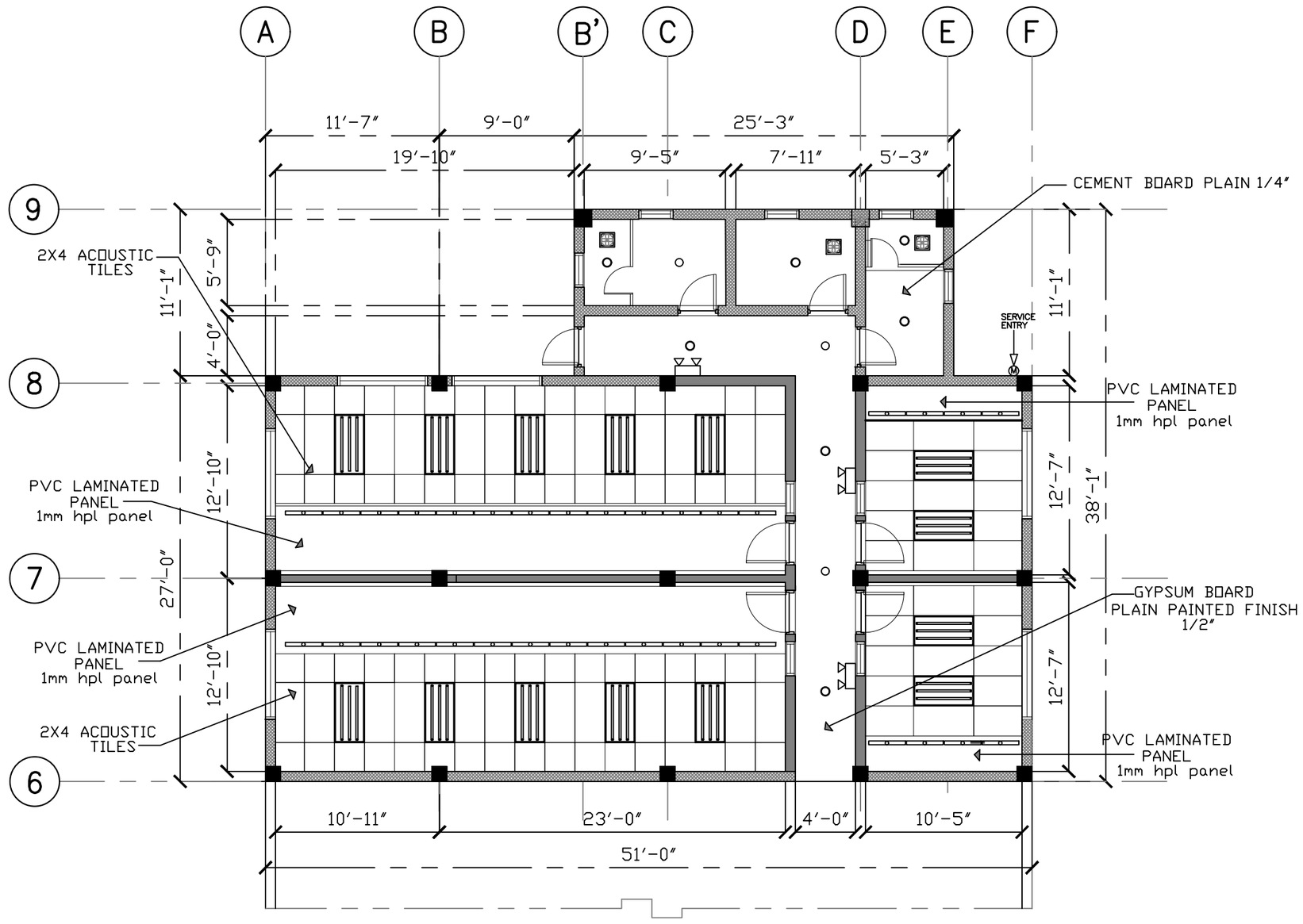

1 A 130 **G/F REFLECTED CEILING PLAN**

SCALE 1/8 : 1

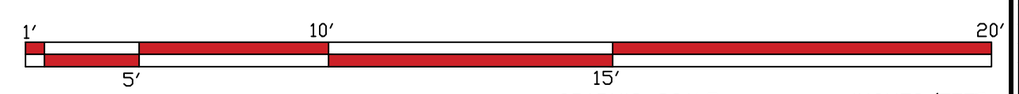

ARCHITECTS
P.O. Box 6
Kolonia, POHNPEI
FSM 96941
Tel. (691) 320-2966
email add.:
arohrarogue@yahoo.com

CONSULTANT

ROHY SALAS ROGUE
PTRC NO.0024015
PHILIPPINES
REGISTERED ARCHITECT

PROPOSED DECEM/NEOC BLDG EXPANSION & REFURBISHING (PALIKIR GOV.CAMPUS)

CONTENTS
G/F REFLECTED CEILING PLAN

Approved

Approved

REVISION	BY

DATE: SEPTEMBER 2020
SCALE: AS SHOWN
DRAWN:
JOB:
SHEET
A-130

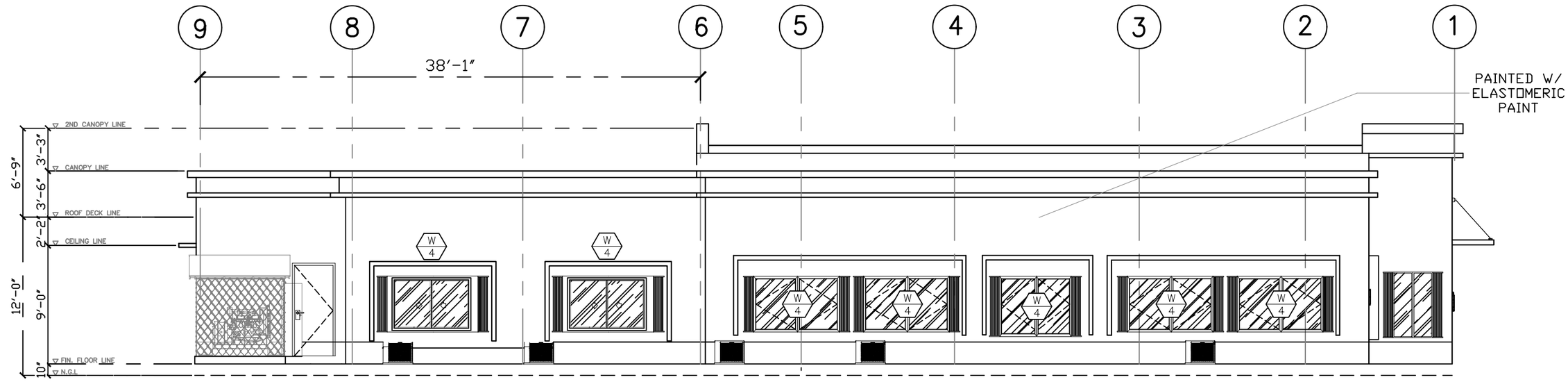

1 / A 200 LEFT SIDE ELEVATION

SCALE 1/8 : 1

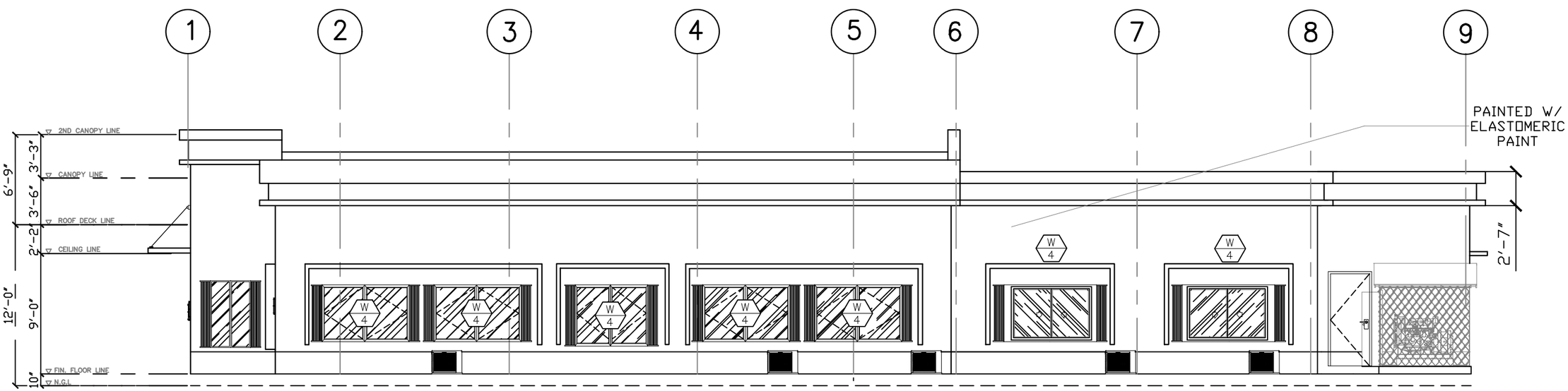

2 / A 200 RIGHT SIDE ELEVATION

SCALE 1/8 : 1

ARCHITECTS
P.O. Box 6
Kolonia, PONHNPEI
FSM 96941
Tel. (691) 320-2966
email add.:
archrsroque@yahoo.com

CONSULTANT

RYAN SALAS ROQUE
PTC NO.0024015
PHILIPPINES
REGISTERED ARCHITECT

PROPOSED DECEM/NEOC BLDG EXPANSION & REFURBISHING (PALIKIR GOV.CAMPUS)

CONTENTS

LEFT ELEVATION

RIGHT ELEVATION

Approved

Approved

REVISION	BY

DATE: SEPTEMBER 2020

SCALE: AS SHOWN

DRAWN:

JOB:

SHEET

A-200

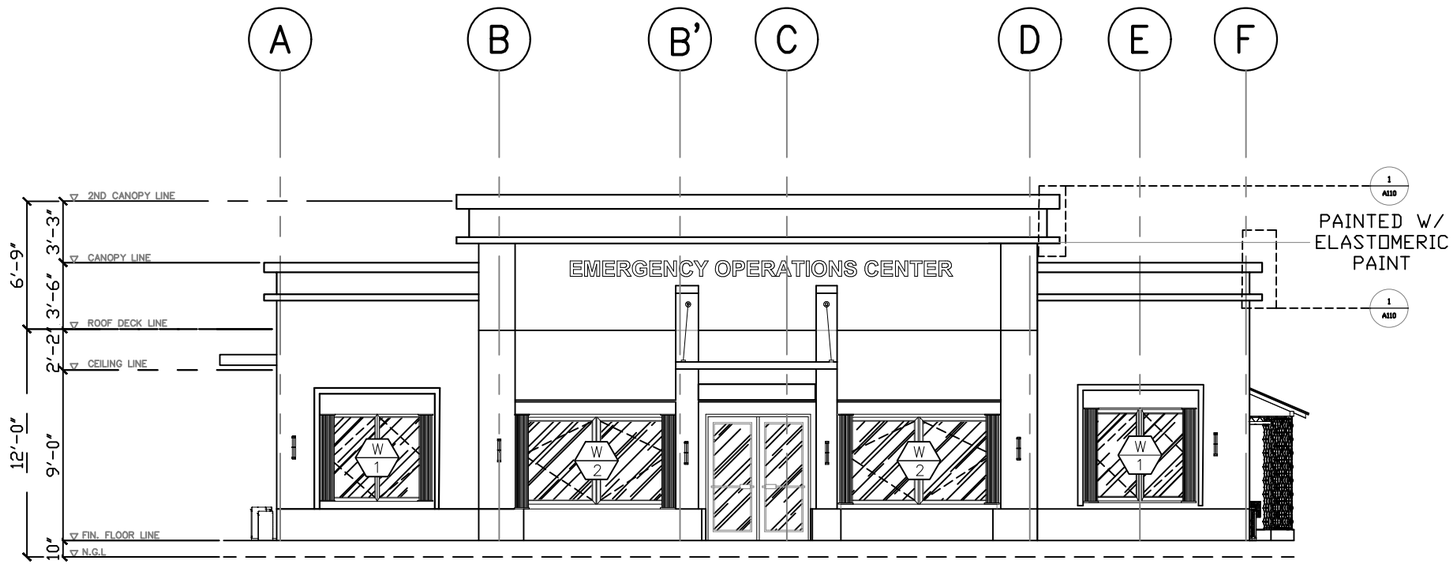

1 / A 201 FRONT SIDE ELEVATION

SCALE 1/8 : 1

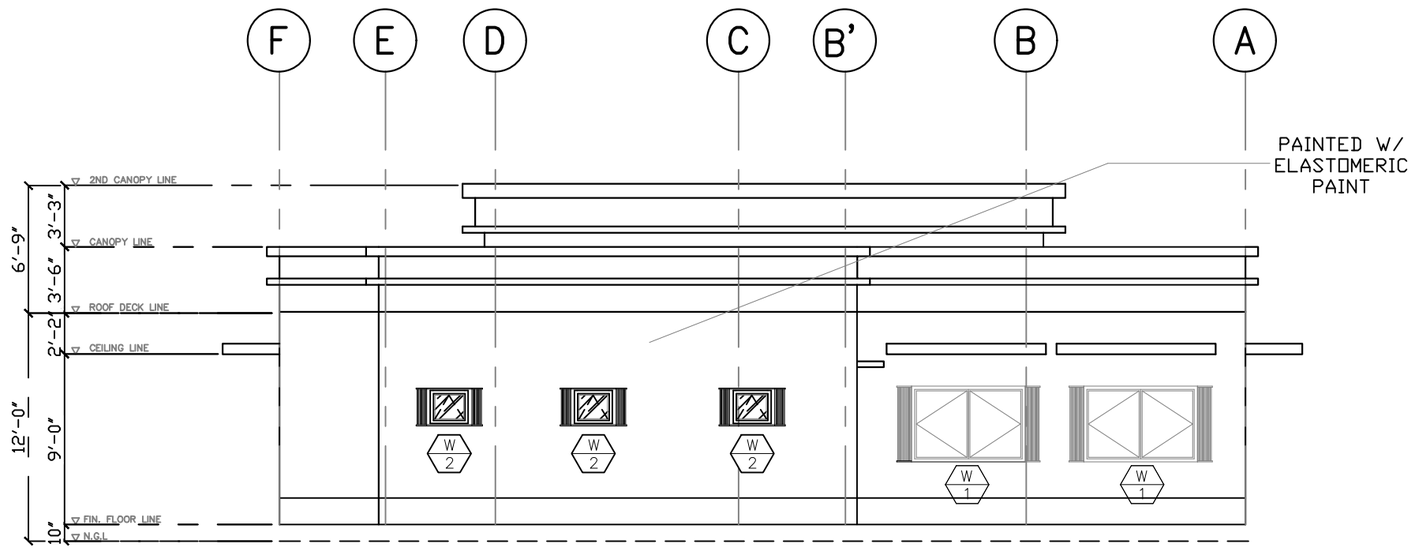

2 / A 201 REAR SIDE ELEVATION

SCALE 1/8 : 1

ARCHITECTS
P.O. Box 6
Kolonia, PONHPEI
FSM 96941
Tel. (691) 320-2966
email add.:
arohrsroque@yahoo.com

CONSULTANT

RYAN SALAS ROQUE
PTC NO.0024015
PHILIPPINES
REGISTERED ARCHITECT

PROPOSED DECEM/NEOC BLDG EXPANSION & REFURBISHING (PALIKIR GOV.CAMPUS)

CONTENTS

FRONT ELEVATION

REAR ELEVATION

Approved

Approved

REVISION	BY

DATE: SEPTEMBER 2020

SCALE: AS SHOWN

DRAWN:

JOB:

SHEET

A-201

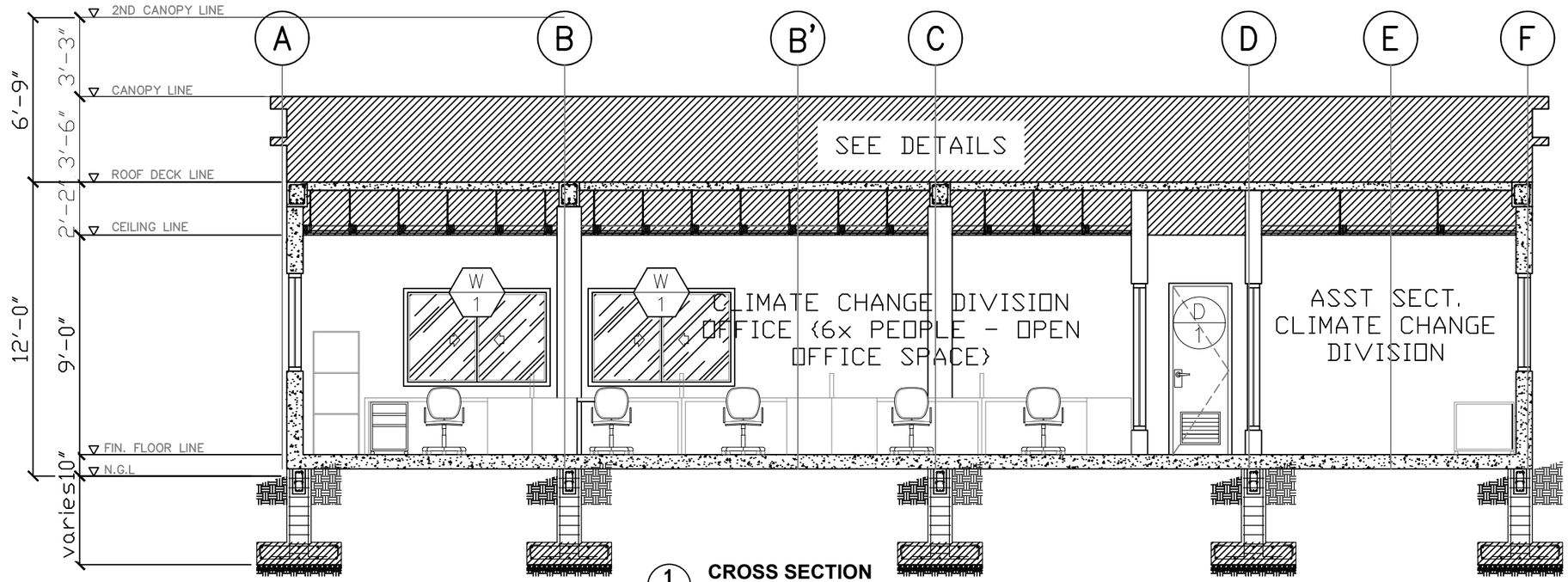

1 A 202 **CROSS SECTION**
SCALE 1/8 : 1

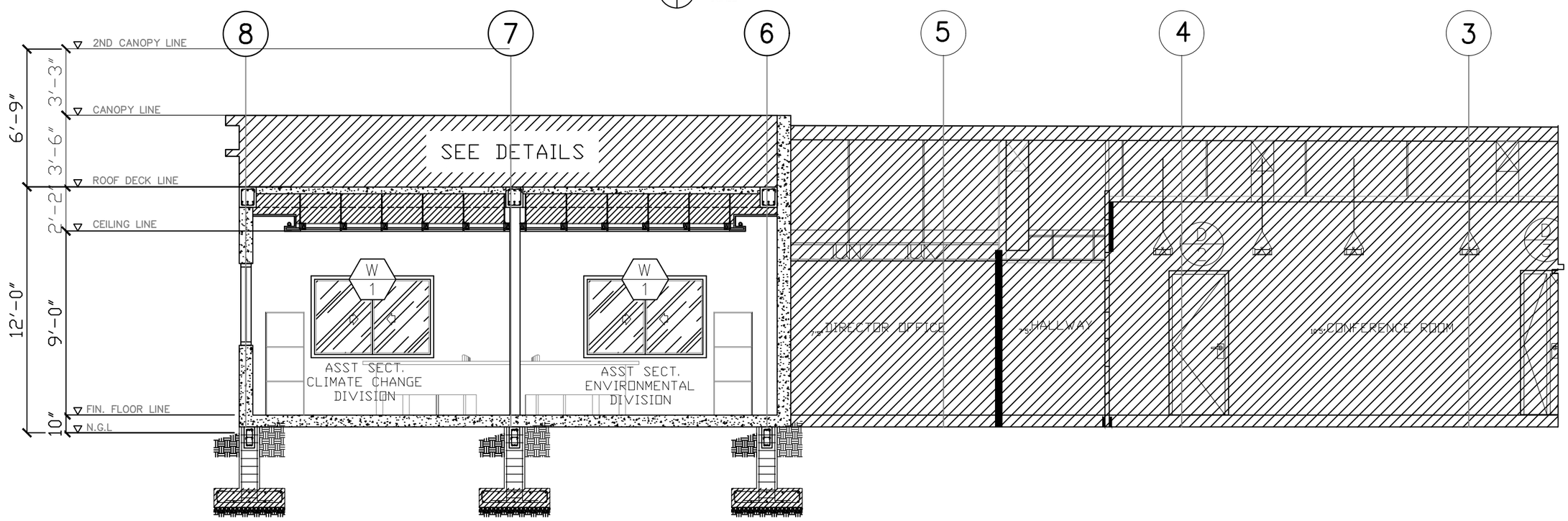

2 A 202 **LONGITUDINAL SECTION**
SCALE 1/8 : 1

ARCHITECTS
P.O. Box 6
Kolonia, PONHPEI
FSM 96941
Tel. (691) 320-2966
email add.:
archrsroque@yahoo.com

CONSULTANT

RYAN SALAS ROQUE
PTC NO.0024015
PHILIPPINES
REGISTERED ARCHITECT

PROPOSED DECEM/NEOC BLDG EXPANSION & REFURBISHING (PALIKIR GOV.CAMPUS)

CONTENTS
CROSS SECTION
LONGITUDINAL SECTION

Approved

Approved

REVISION	BY

DATE: SEPTEMBER 2020
SCALE: AS SHOWN
DRAWN:
JOB:
SHEET
A-202

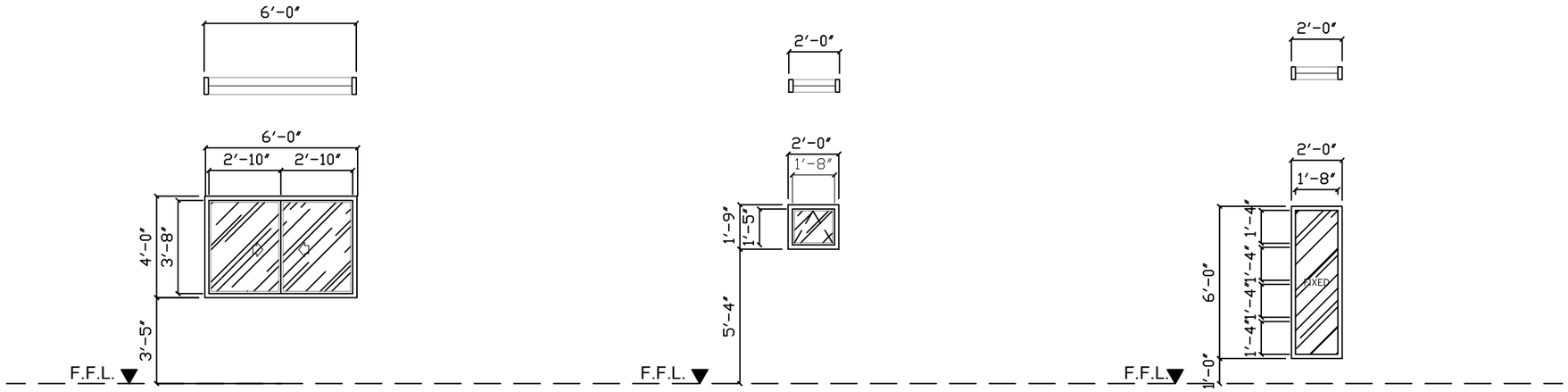

W 1 — LOCATION: ROOMS OFFICES
TYPE: SLIDDING WINDOWS
ALUMINUM ANALOK FRAME, MIRROR GLASS FINISH
QTY: 6 SETS

W 2 — LOCATION: TOILETS HE SHE AND PWD
TYPE: AWNING WINDOW
ALUMINUM ANALOK FRAME, MIRROR GLASS FINISH
QTY: 5 SETS

W 3 — LOCATION: HALLWAY
TYPE: FIXED WINDOWS
ALUMINUM ANALOK FRAME, MIRROR GLASS FINISH
QTY: 4 SETS

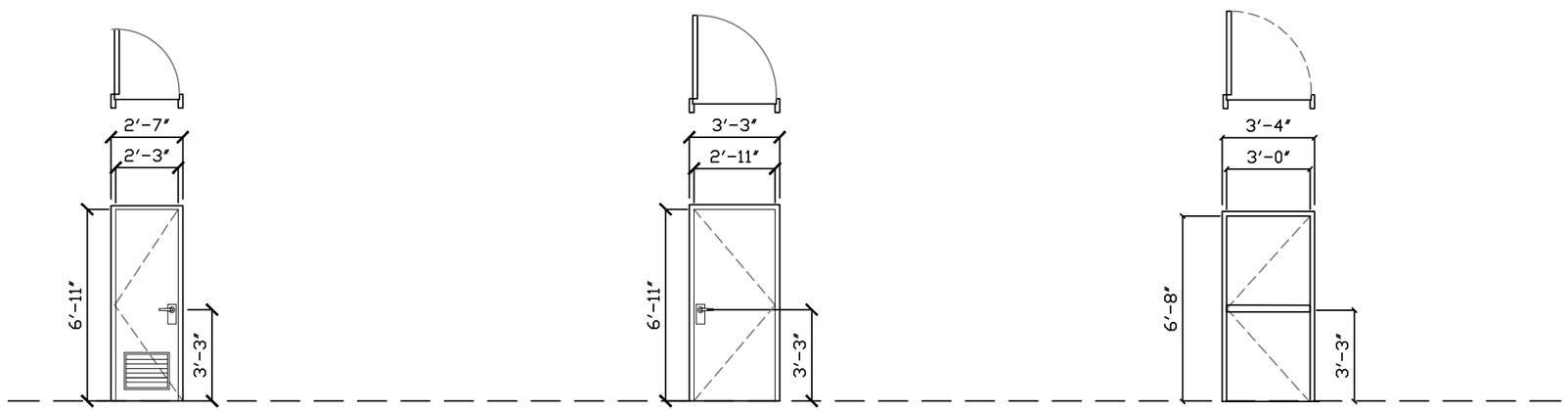

D 1 — LOCATION: TOILETS HE, SHE AND PWD
TYPE: METAL DOOR ON METAL JAMB
QTY: 5 SETS

D 2 — LOCATION: ROOMS OFFICES
TYPE: METAL DOOR ON METAL JAMB
QTY: 4 SETS

D 3 — LOCATION: EXIT DOOR
TYPE: METAL STEEL DOOR
QTY: 1 SETS

1 / A 301 **SCHEDULE OF DOORS & WINDOWS**
SCALE 3/16 : 1

ARCHITECTS
P.O. Box 6
Kolonia, PONHPEI
FSM 96941
Tel. (691) 320-2966
email add.:
arohrarogue@yahoo.com

CONSULTANT

PROPOSED DECEM/NEOC BLDG EXPANSION & REFURBISHING (PALIKIR GOV.CAMPUS)

CONTENTS
SCHEDULE OF DOORS AND WINDOWS

Approved
Approved

REVISION	BY

DATE: SEPTEMEBR 2020
SCALE: AS SHOWN
DRAWN:
JOB:
SHEET
A-301

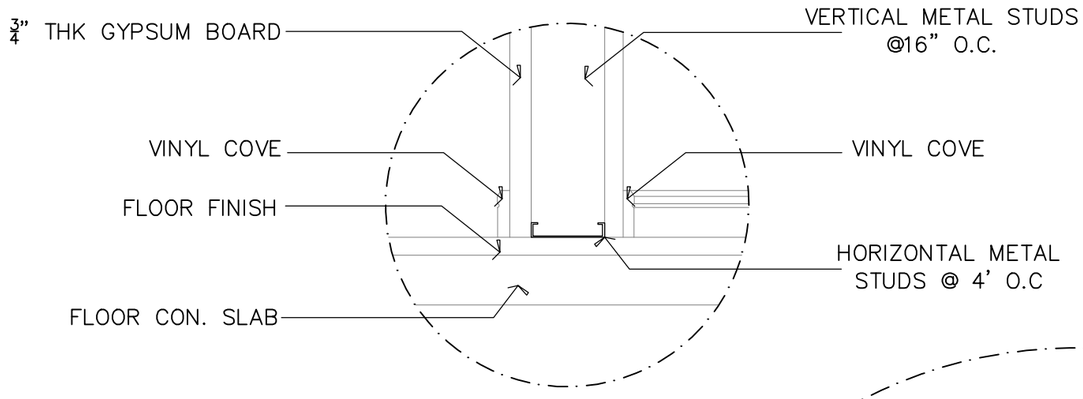

1 A 302 **FLOOR/DRYWALL DETAIL**
SCALE 3/8"

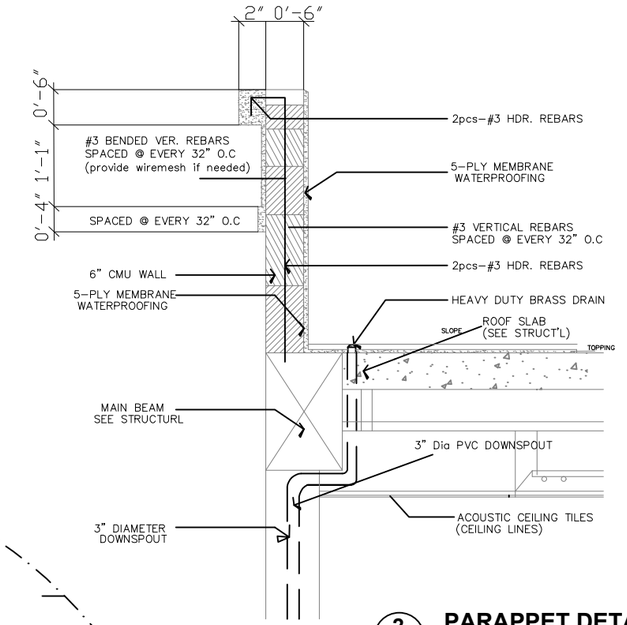

2 A 302 **PARAPPET DETAILS**
SCALE 3/8"

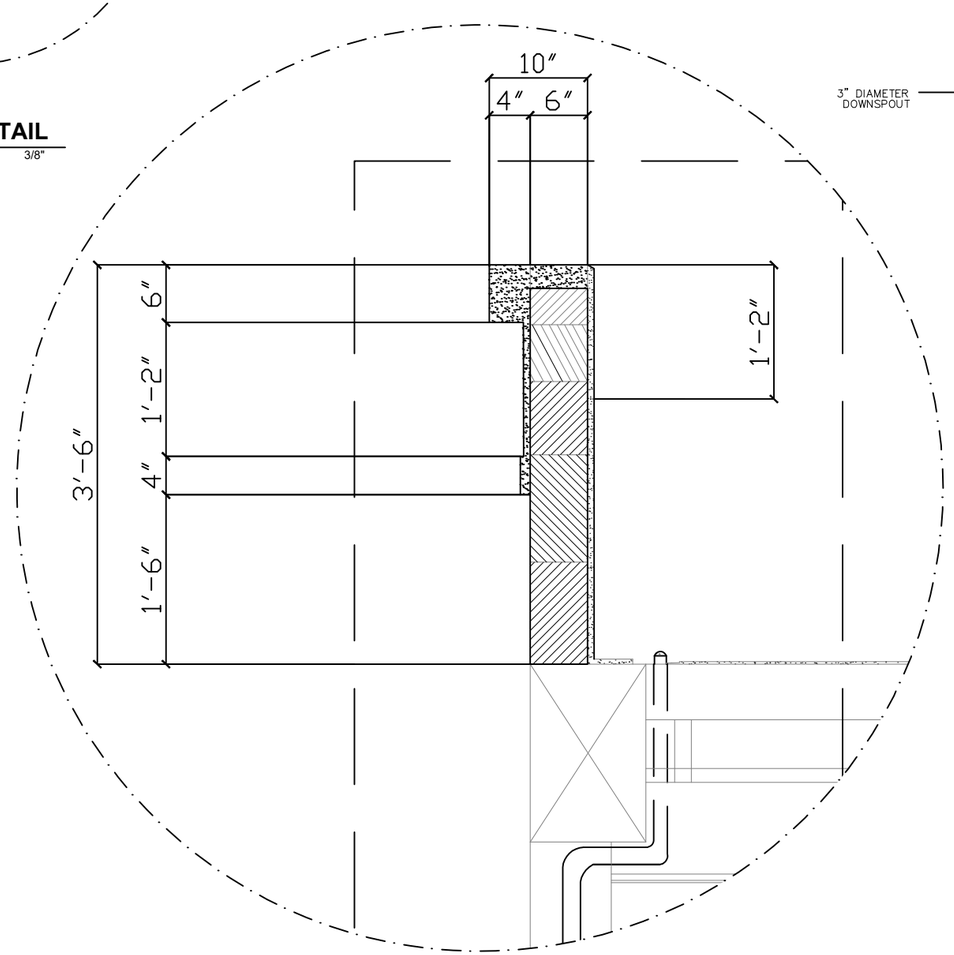

3 A 302 BLOW-UP DETAILS
PARAPPET BLOW-UP DETAILS
SCALE 3/8"

ARCHITECTS
P.O. Box 6
Kolonia, POHNPEI
FSM 96941
Tel. (691) 320-2966
email add.:
archrsrcqua@yahoo.com

CONSULTANT

PROPOSED DECEM/NEOC BLDG EXPANSION & REFURBISHING (PALIKIR GOV.CAMPUS)

CONTENTS

DETAILS

PARAPET CEILING
PARAPET BLOW UP DETAIL

Approved

Approved

REVISION	BY

DATE: SEPTEMBER 2020
SCALE: AS SHOWN
DRAWN:
JOB:
SHEET
A-302

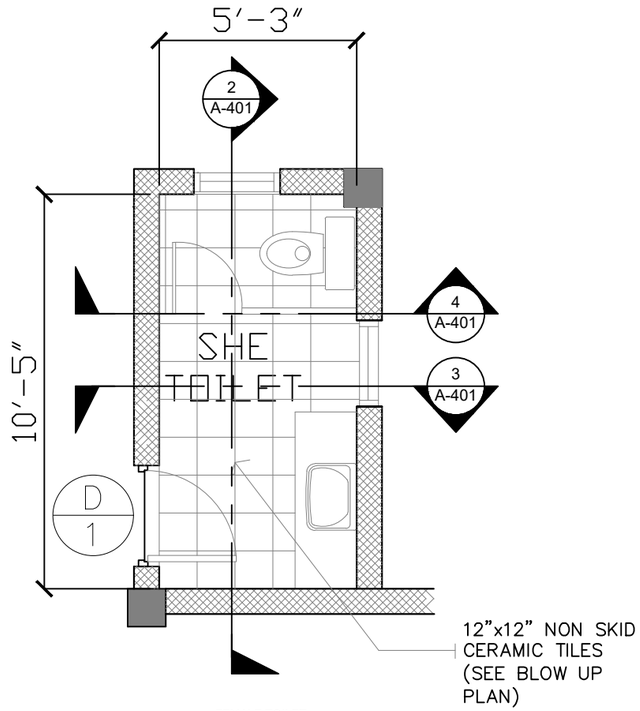

1 A 401 FEMALE TOILET
FLOOR PLAN
SCALE 1/4: 1

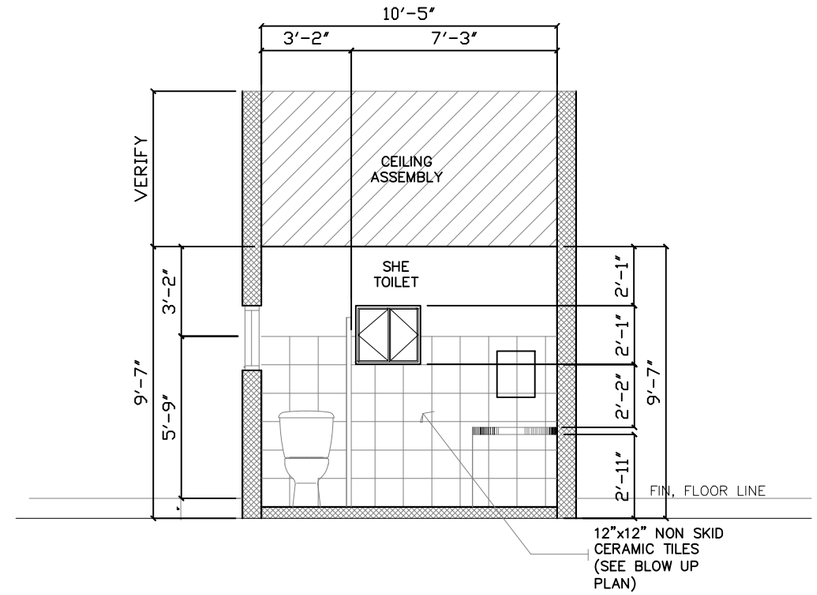

2 A 401 FEMALE TOILET
ELEVATION-A
SCALE 3/8"

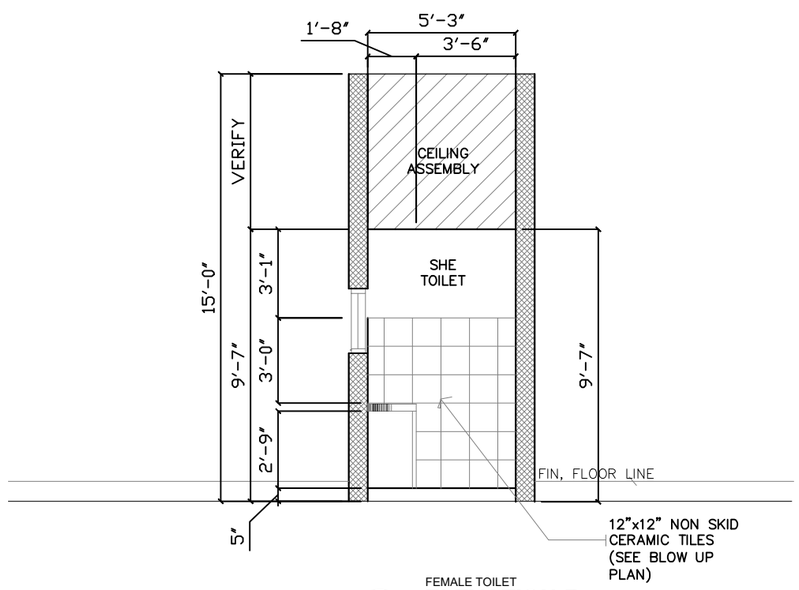

3 A 401 FEMALE TOILET
ELEVATION-B
SCALE 3/8"

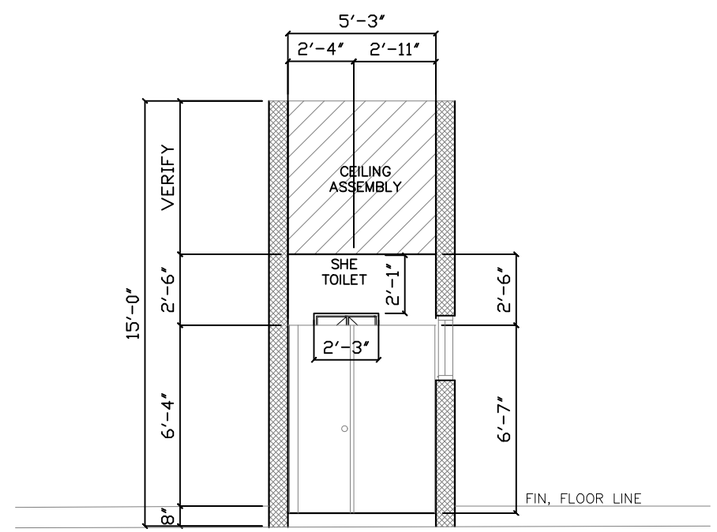

4 A 401 FEMALE TOILET
ELEVATION-C
SCALE 3/8"

ARCHITECTS
P.O. Box 6
Kolonia, PONHPEI
FSM 96941
Tel. (691) 320-2966
email add.:
arohrarogue@yahoo.com

CONSULTANT

PROPOSED DECEM/NEOC BLDG EXPANSION & REFURBISHING (PALIKIR GOV.CAMPUS)

CONTENTS

ELEVATION TOILETS

Approved

Approved

REVISION	BY

DATE: SEPTEMBER 2020
SCALE: AS SHOWN
DRAWN:
JOB:
SHEET
A-401

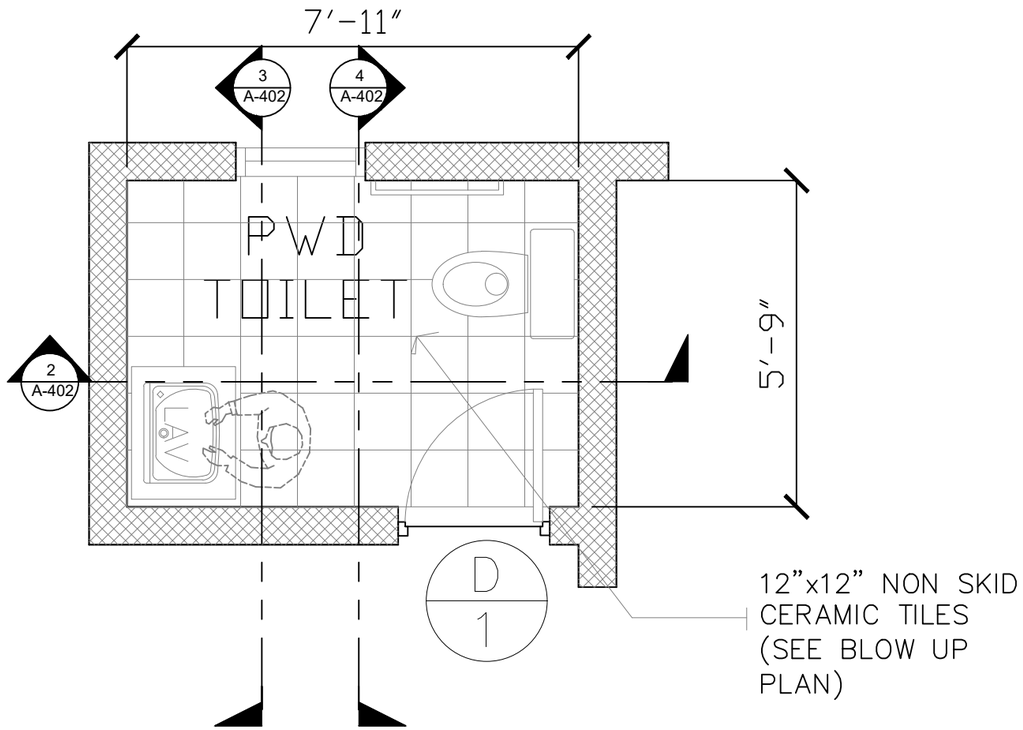

1 A 402 PWD TOILET
FLOOR PLAN
SCALE 3/16: 1

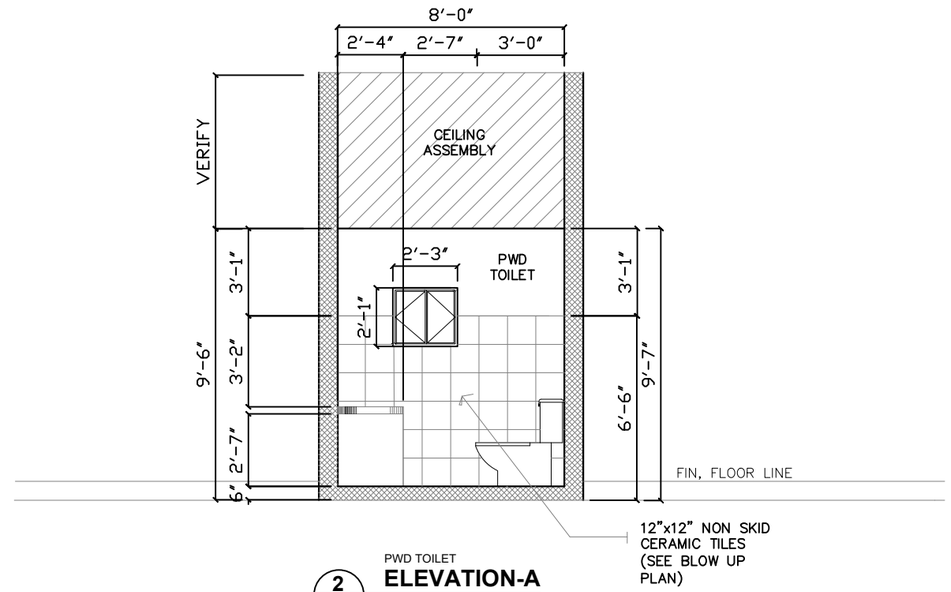

2 A 402 PWD TOILET
ELEVATION-A
SCALE 3/8"

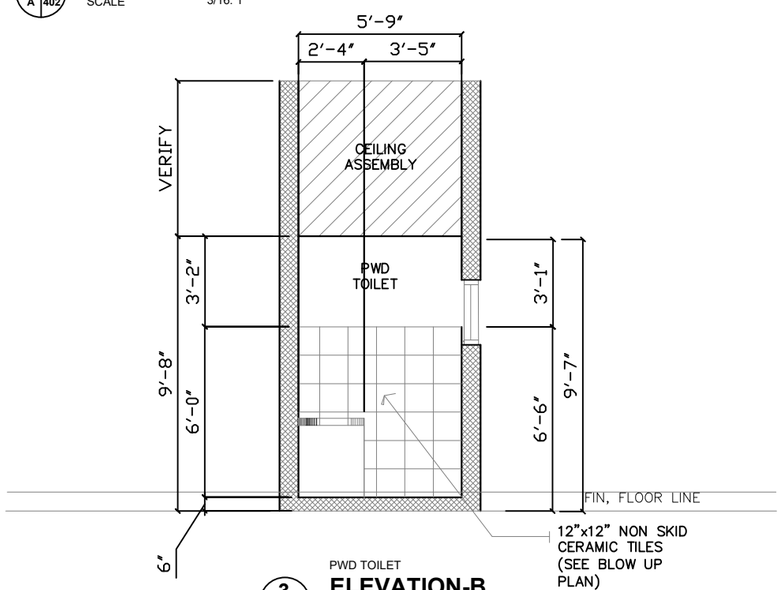

3 A 402 PWD TOILET
ELEVATION-B
SCALE 3/8"

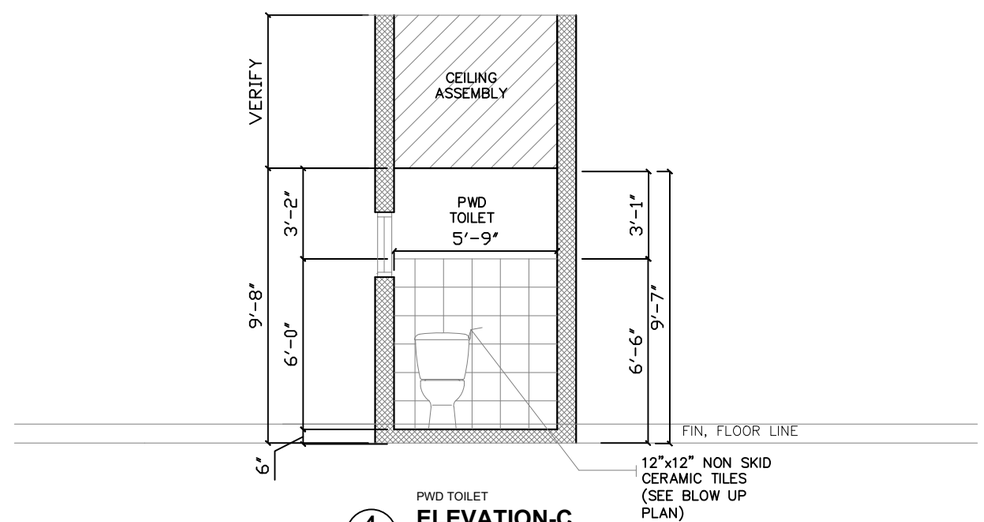

4 A 402 PWD TOILET
ELEVATION-C
SCALE 3/8"

ARCHITECTS
P.O. Box 6
Kolonia, POHNPEI
FSM 96941
Tel. (691) 320-2966
email add.:
arohrsroque@yahoo.com

CONSULTANT

RYAN SALAS ROQUE
PTR NO.0024015
PHILLIPPINES
REGISTERED ARCHITECT

PROPOSED DECEM/NEOC BLDG EXPANSION & REFURBISHING (PALIKIR GOV.CAMPUS)

CONTENTS

ELEVATION
PWD TOILET

Approved

Approved

REVISION	BY

DATE: SEPTEMBER 2020
SCALE: AS SHOWN
DRAWN:
JOB:
SHEET
A-402

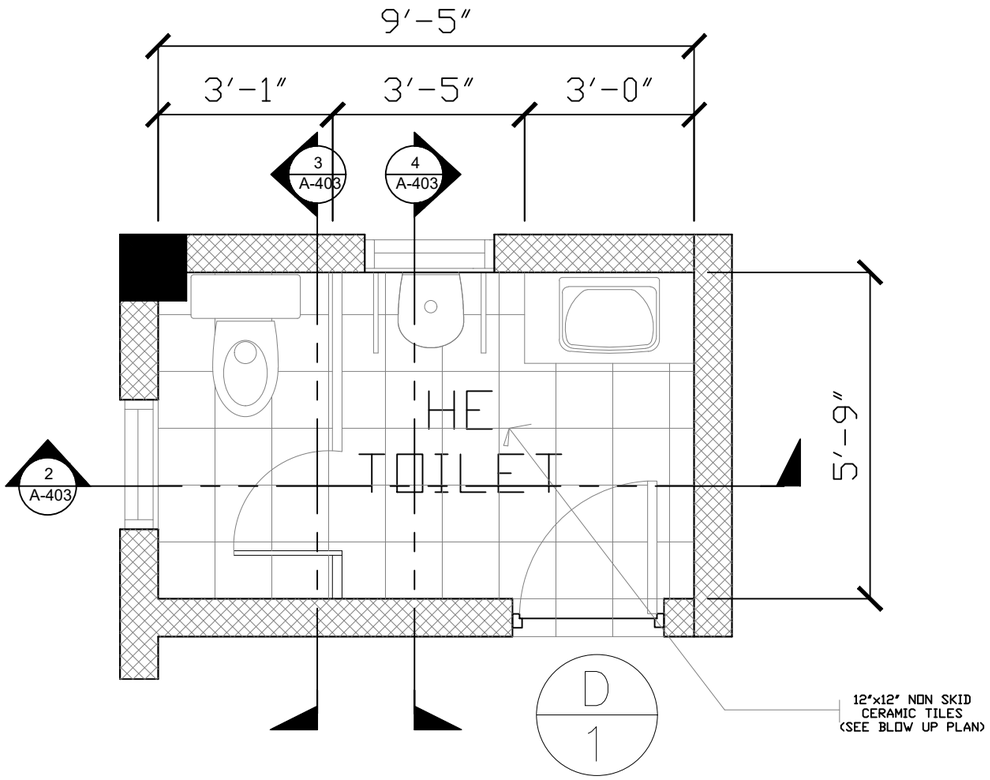

1 A 403 MALE TOILET
FLOOR PLAN
SCALE 3/16: 1

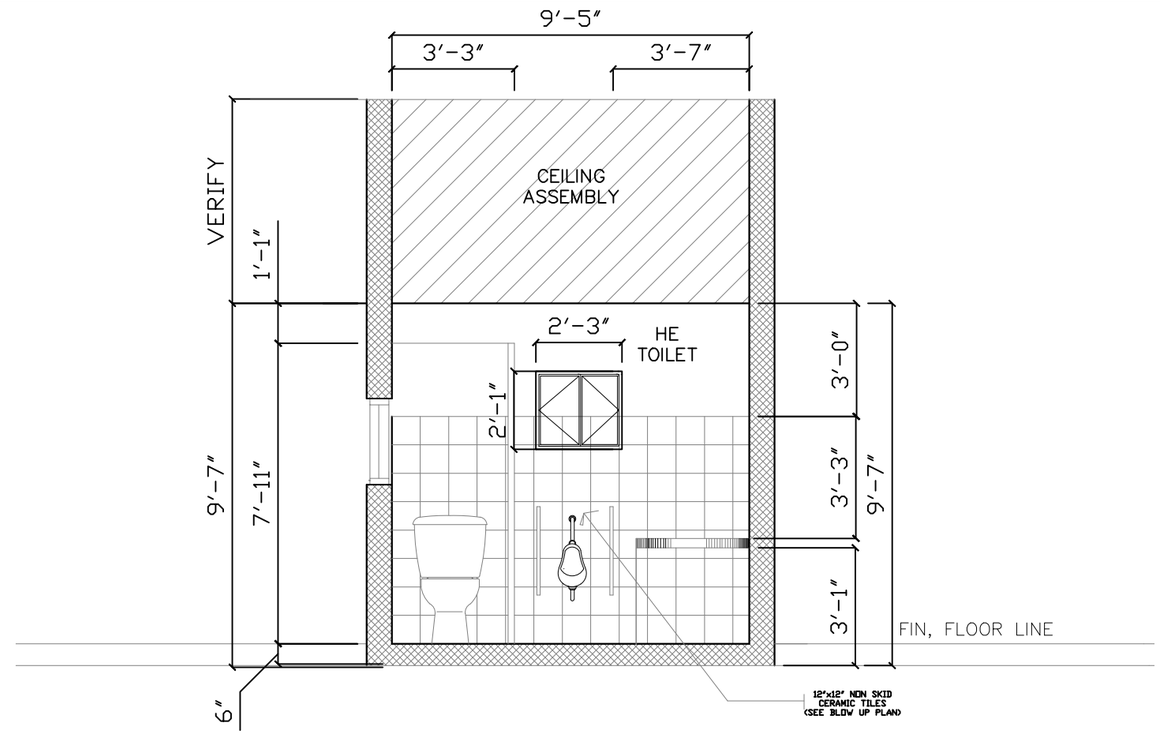

2 A 403 HE TOILET
ELEVATION-A
SCALE 3/8"

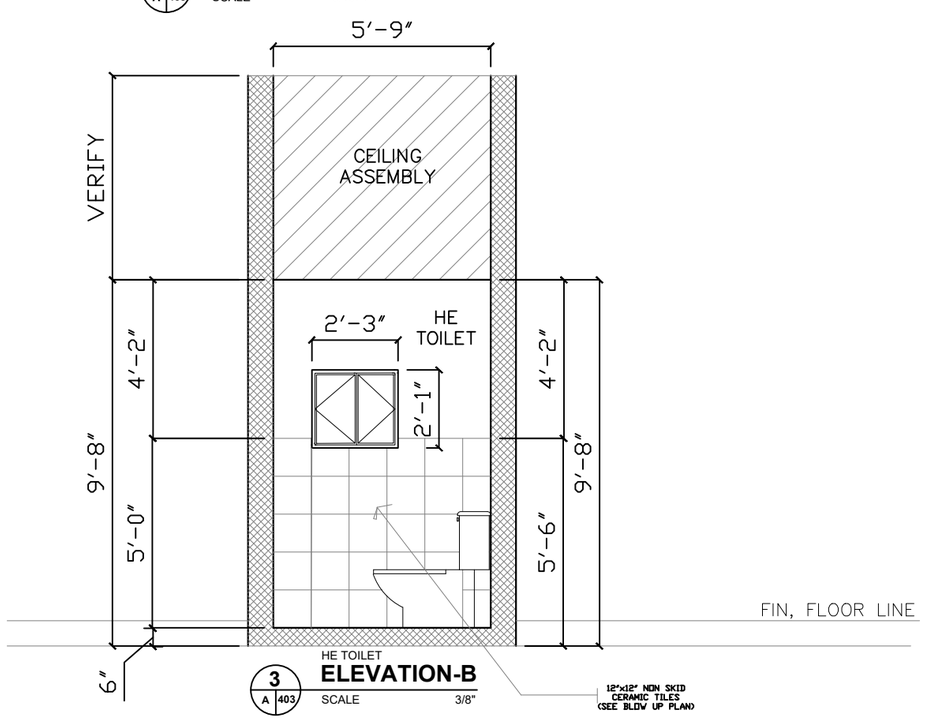

3 A 403 HE TOILET
ELEVATION-B
SCALE 3/8"

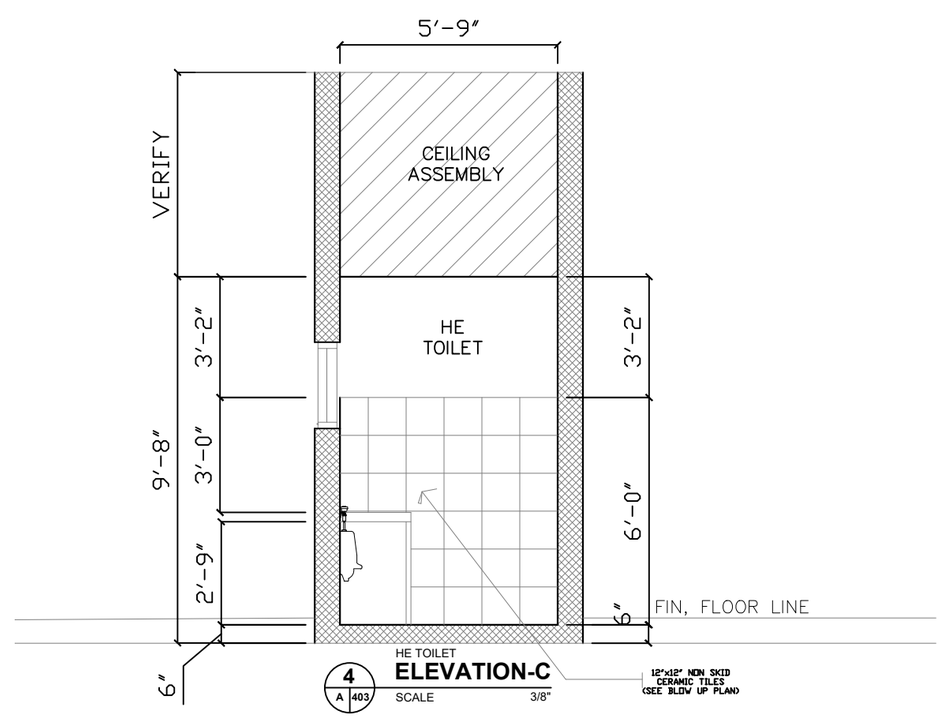

4 A 403 HE TOILET
ELEVATION-C
SCALE 3/8"

ARCHITECTS
P.O. Box 6
Kolonia, PONHPEI
FSM 96941
Tel. (691) 320-2966
email add.:
arohrarogue@yahoo.com

CONSULTANT

ARAI SALAS ROGUE
PTC NO.0024015
PHILIPPINES
REGISTERED ARCHITECT

PROPOSED DECEM/NEOC BLDG EXPANSION & REFURBISHING (PALIKIR GOV.CAMPUS)

CONTENTS
PLAN
ELEVATION
HE TOILET

Approved

Approved

REVISION	BY

DATE: SEPTEMBER 2020
SCALE: AS SHOWN
DRAWN:
JOB:
SHEET
A-403

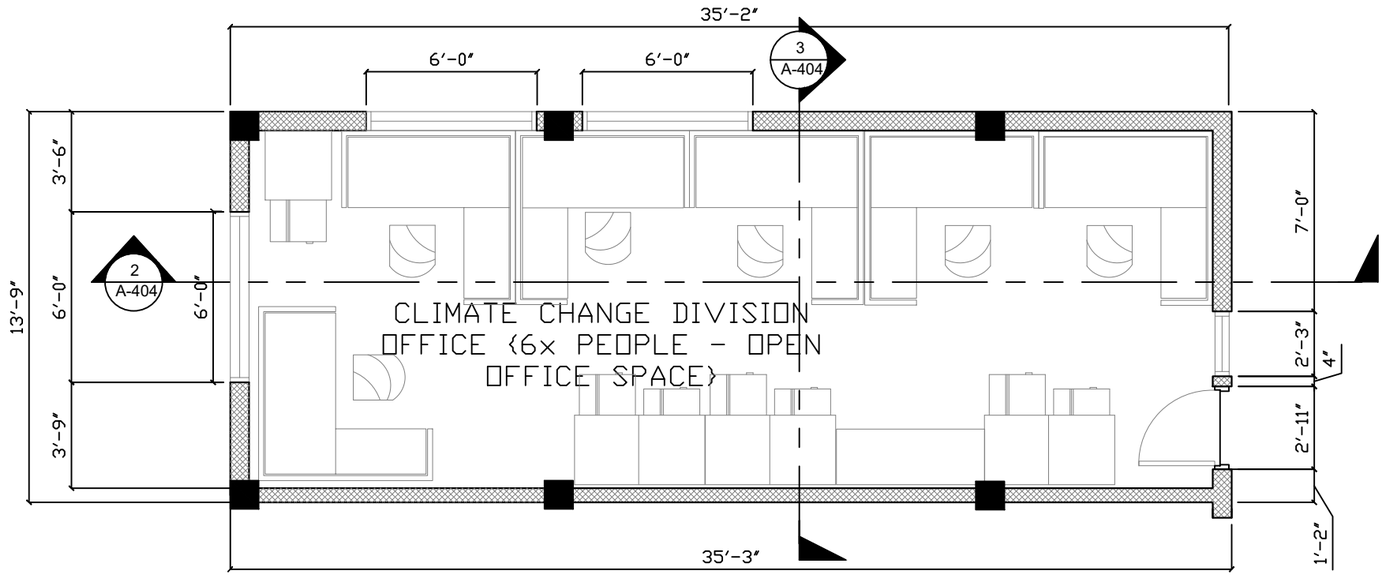

1 A 404 CLIMATE CHANGE DIVISION OFFICE
GROUND FLOOR PLAN
SCALE 3/16: 1

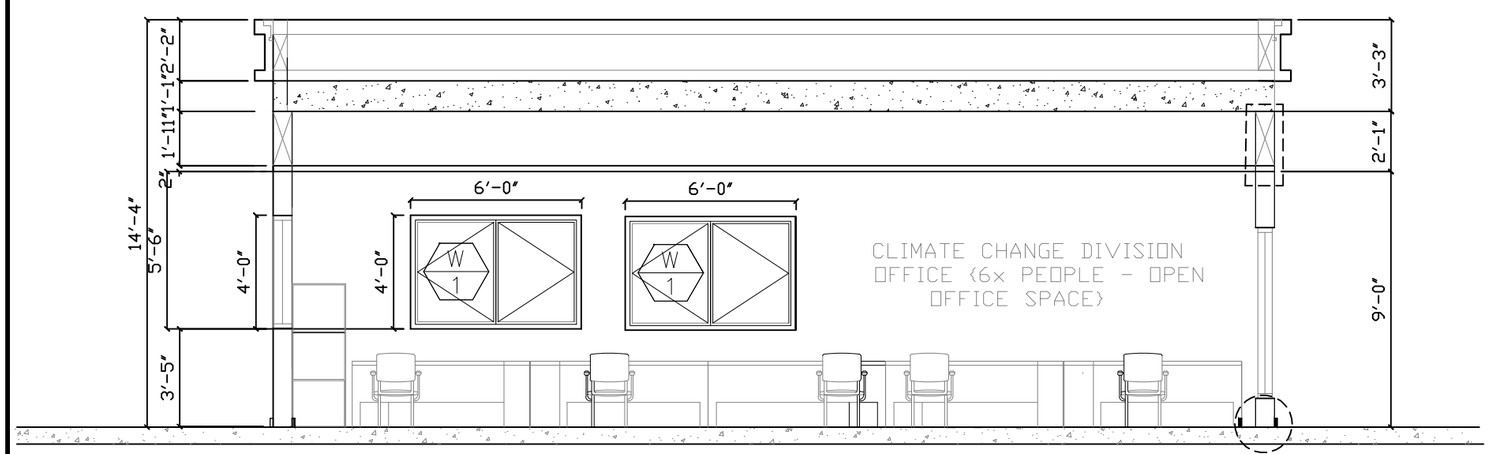

2 A 404 CLIMATE CHANGE DIVISION OFFICE
ELEVATION-A
SCALE 3/8"

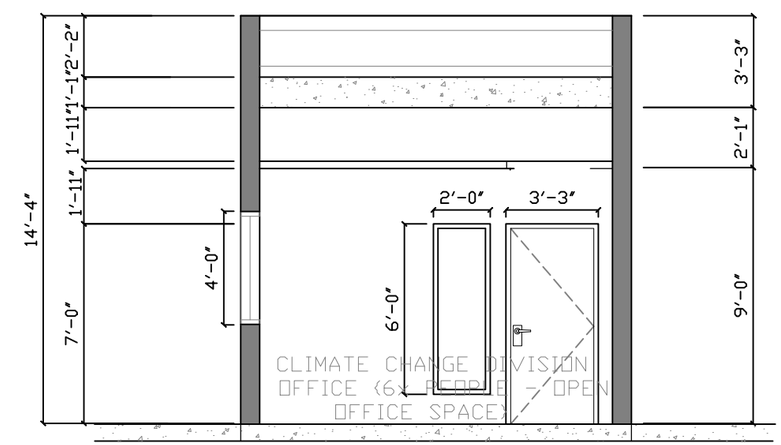

3 A 404 CLIMATE CHANGE DIVISION OFFICE
ELEVATION-B
SCALE 3/8"

ARCHITECTS
P.O. Box 6
Kolonia, POHNPEI
FSM 96941
Tel. (691) 320-2966
email add.:
arohareaqua@yahoo.com

CONSULTANT

RYAN SALAS ROQUE
PTR NO.0024015
PHILIPPINES
REGISTERED ARCHITECT

PROPOSED DECEM/NEOC BLDG EXPANSION & REFURBISHING (PALIKIR GOV.CAMPUS)

CONTENTS
CLIMATE CHANGE DIVISION OFFICE
ELEVATION/S

Approved

Approved

REVISION	BY

DATE: SEPTEMBER 2020
SCALE: AS SHOWN
DRAWN:
JOB:
SHEET
A-404

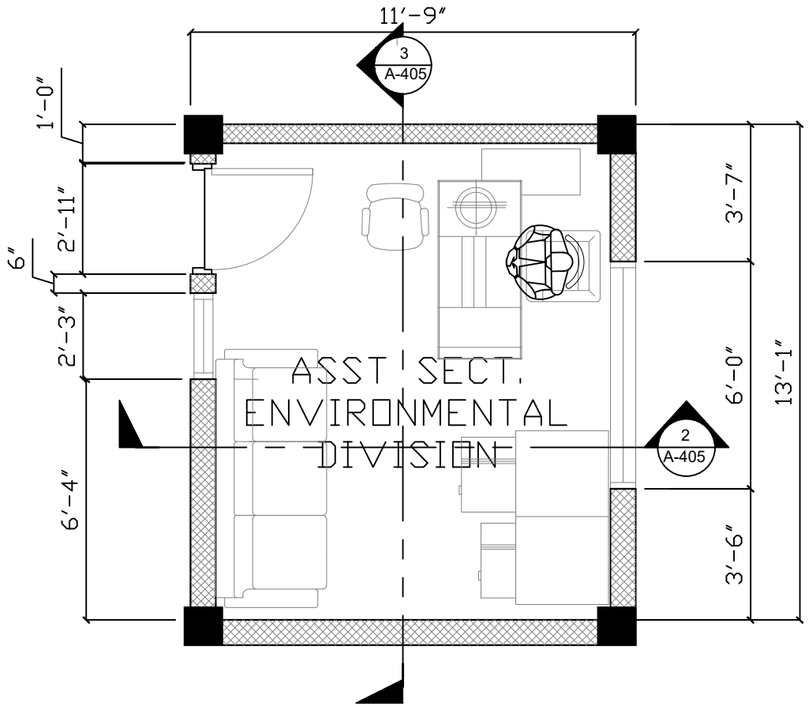

ASSISTANT SECRETARY ENVIRONMENTAL DIVISION

1 A 405 GROUND FLOOR PLAN

SCALE 3/16: 1

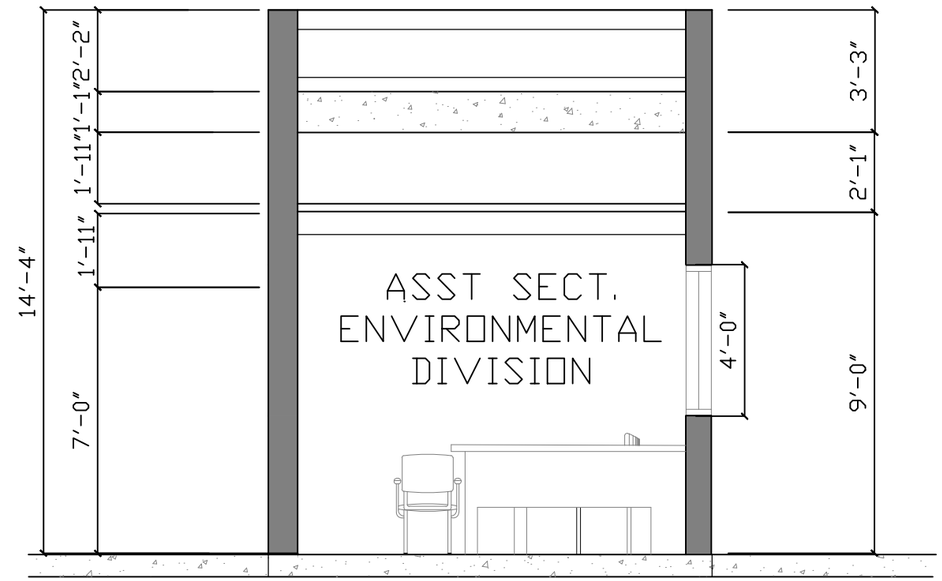

2 A 405 ELEVATION-A

SCALE 3/8"

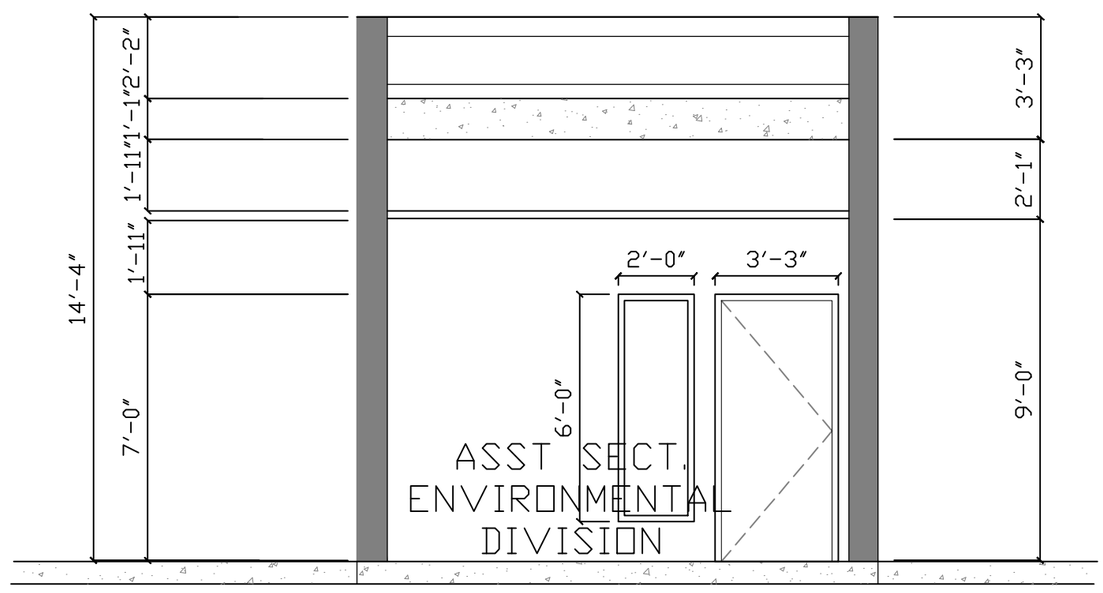

3 A 405 ELEVATION-B

SCALE 3/8"

ARCHITECTS
P.O. Box 6
Kolonia, PONNPEI
FSM 96941
Tel. (691) 320-2966
email add.:
arohrarogue@yahoo.com

CONSULTANT

RYAN SALAS ROQUE
PTR NO.0024015
PHILIPPINES
REGISTERED ARCHITECT

PROPOSED DECEM/NEOC BLDG EXPANSION & REFURBISHING (PALIKIR GOV.CAMPUS)

CONTENTS

ASS SECT ENVIRONMENTAL OFFICE

Approved

Approved

REVISION	BY

DATE: SEPTEMBER 2020

SCALE: AS SHOWN

DRAWN:

JOB:

SHEET

A-405

ROOMS NO.	ROOMS NAME \ FINISHES	FLOOR						WALL				CEILING						BASE				
		VINYL TILES	PLAIN CEMENT SMOOTH FINISH	12"X12" NON-SKID PAINT	NON-SKID PAINT CERAMIC TILES	24"X24" CERAMIC TILES	1/8 dia WASHOUT	CEMENT PLASTER PAINTED FINISH	CEMENT BOARD PAINTED FINISH	3/4 THK GYPSUM BOARD	12"X12" CEMENT PLASTER	GYPSUM BOARD PLAINTED FINISH	CONCRETE PLAINTED FINISH	ORDINARY PILY PLAINTED FINISH	CEMENT BOARD PLAIN PAINTED FIN.	2"X4" 1/2 THK ACCOUSTIC TILE ON ALUM. T-UNNERS	1"X4" WOODEN COMICE DESIGN	PLAINTED FINISH	VINYL COVE BASE	1 TILE UP	CERAMIC TILES	1"X4" WOODEN BASED BOARD
EOC-100	CLIMATE CHANGE DIVISON OFFICE (6X PEOPLE - OPEN OFFICE SPACE)					●		●		●		●				●			●			
EOC-101	ENVIRONMENTAL DIVISION OFFICE {6x PEOPLE - OPEN OFFICE SPACE}					●		●		●		●				●			●			
EOC-102	ASST SECT. CLIMATE CHANGE DIVISION					●		●				●				●			●			
EOC-103	ASST SECT. CLIMATE CHANGE DIVISION					●		●				●				●			●			
EOC-104	HE TOILET			●							●				●							
EOC-105	PWD TOILET			●							●				●							
EOC-106	SHE TOILET			●							●				●							
EOC-107	H A L L W A Y					●		●		●									●			

ARCHITECTS
P.O. Box 6
Kolonia, PONHNPEI
FSM 96941
Tel. (691) 320-2966
email add.:
arohrarogue@yahoo.com

CONSULTANT

RYAN SALAS ROGUE
PTC NO.0024015
PHILIPPINES
REGISTERED ARCHITECT

PROPOSED DECEM/NEOC BLDG EXPANSION & REFURBISHING (PALIKIR GOV.CAMPUS)

CONTENTS

SCHEDULE FINISHES

Approved

Approved

REVISION	BY

DATE: SEPTEMBER 2020
SCALE: AS SHOWN
DRAWN:
JOB:
SHEET
A-501

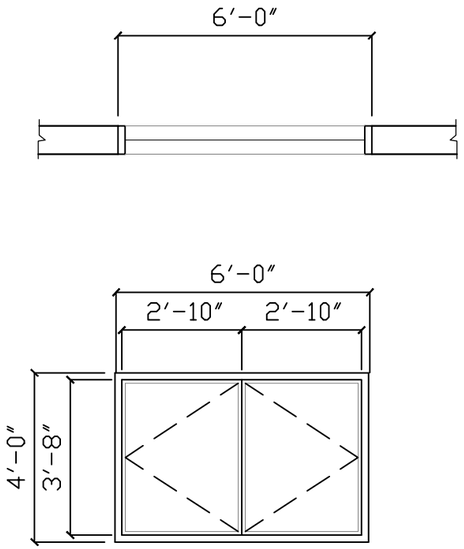

1 A 601 **WINDOW ELEVATION**
SCALE 3/16: 1

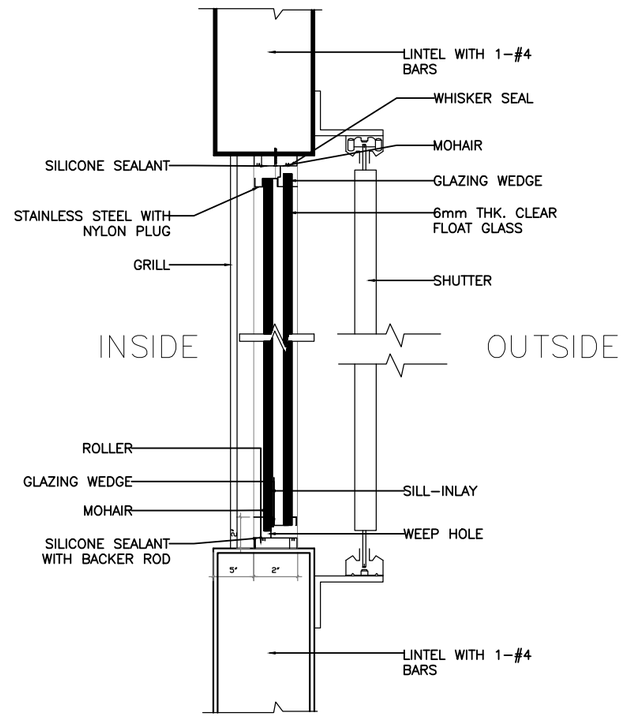

3 A 601 DETAIL SECTION OF WINDOWS
WALL SECTION
SCALE 3/8"

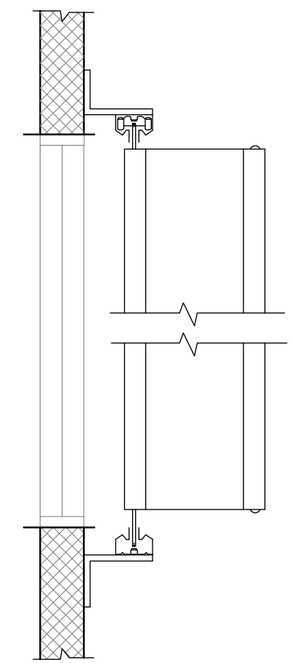

4 A 601 WALL SECTION
ALUMINUM TYPHOON SHUTTER
SCALE 3/8"

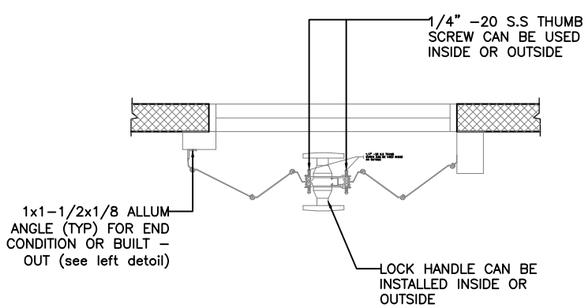

2 A 601 WALL SECTION
ALUMINUM TYPHOON SHUTTER
SCALE 3/8"

ARCHITECTS
P.O. Box 6
Kolonia, POHNPEI
FSM 96941
Tel. (691) 320-2966
email add.:
arohrsroque@yahoo.com

CONSULTANT

PROPOSED DECEM/NEOC BLDG EXPANSION & REFURBISHING (PALIKIR GOV.CAMPUS)

CONTENTS

WINDOW DETAIL

Approved

Approved

REVISION	BY

DATE: SEPTEMBER 2020
SCALE: AS SHOWN
DRAWN:
JOB:
SHEET
A-601

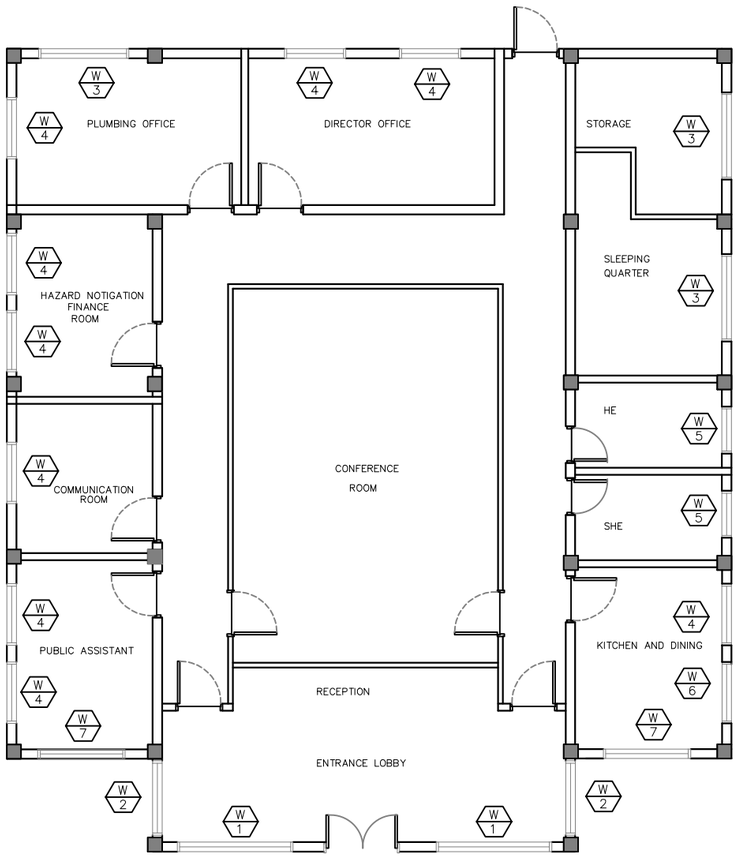

KEY PLAN
GROUND FLOOR PLAN
1 A 602 SCALE 3/16: 1

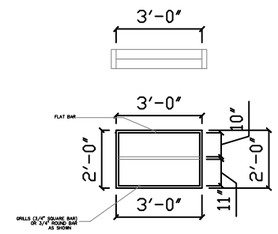

W 5 — LOCATION: TOILET FOR HE
TOILET FOR SHE
TYPE: GRILLS FOR AWNING WINDOW
QTY: 2 SETS

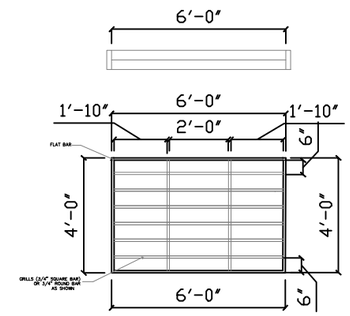

W 3 — LOCATION: PLANNING OFFICE, STORAGE
SLEEPING QUARTER
TYPE: GRILLS FOR SLIDING GLASS WINDOW
QTY: 3 SETS

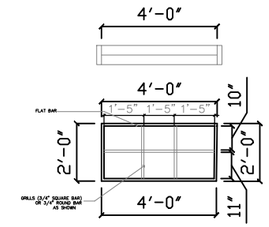

W 6 — LOCATION: KITCHEN & DINING
PUBLIC ASSISTANT
TYPE: GRILLS FOR SLIDING GLASS WINDOW
QTY: 1 SETS

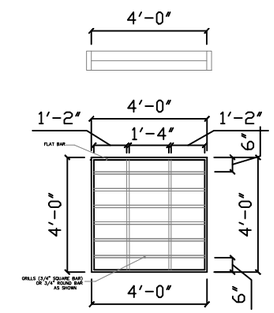

W 4 — LOCATION: PUBLIC ASSISTANT, COMMUNICATION ROOM
HAZARD/FINANCE ROOM, PLANNING OFFICE
KITCHEN & DINING
TYPE: GRILLS FOR SLIDING GLASS WINDOW
QTY: 9 SETS

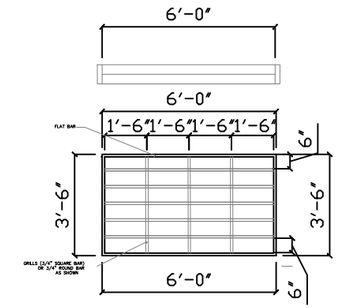

W 7 — LOCATION: KITCHEN & DINING
PUBLIC ASSISTANT
TYPE: GRILLS FOR SLIDING GLASS WINDOW
QTY: 2 SETS

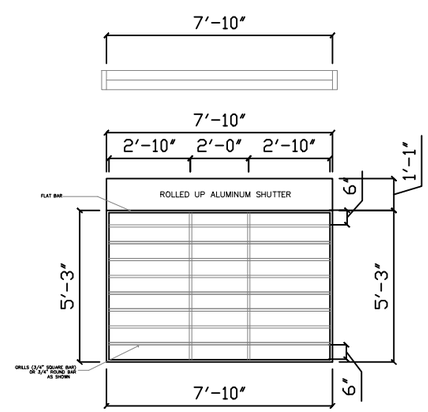

W 1 — LOCATION: ENTRANCE LOBBY
TYPE: GRILLS FOR LAMINATED GLASS FIXED WINDOW
QTY: 2 SETS

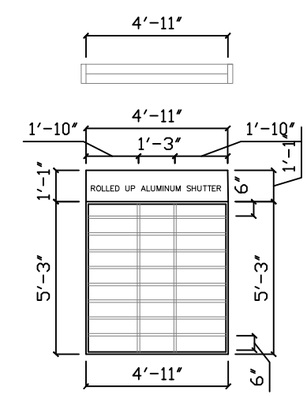

W 2 — LOCATION: ENTRANCE LOBBY
TYPE: GRILLS FOR LAMINATED GLASS FIXED WINDOW
QTY: 2 SETS

GROUND FLOOR PLAN SCHEDULE OF GRILLS
2 A 602 SCALE 3/16: 1

ARCHITECTS
P.O. Box 6
Kolonia, PONHNPEI
FSM 96941
Tel. (691) 320-2966
email add.:
archrsroque@yahoo.com
CONSULTANT
RYAN SALAS ROQUE
PTRC NO.0024015
PHILIPPINES
REGISTERED ARCHITECT

PROPOSED DECEM/NEOC BLDG EXPANSION & REFURBISHING (PALIKIR GOV.CAMPUS)

CONTENTS
SCHEDULE OR GRILLS

Approved
Approved

REVISION	BY

DATE: SEPTEMBER 2020
SCALE: AS SHOWN
DRAWN:
JOB:
SHEET
A-602

1. ALL ELECTRICIAN WORKS SHALL BE DONE ACCORDING TO THE APPLICABLE SECTIONS OF THE NATIONAL ELECTRICAL CODE (NEC), RULES & REGULATIONS OF THE DEPARTMENT OF PUBLIC WORKS, LOCAL POWER AUTHORITY, & TELEPHONE AUTHORITY.
2. ALL EQUIPMENT & MATERIALS SHALL BE IN U.L. LISTED WHERE LISTING IS AVAILABLE FOR THAT TYPE OF EQUIPMENT OR CONFORMS TO ANSI OR NEMA STANDARDS.
3. WORKMANSHIP SHALL CONFORM TO CONSTRUCTION PRACTICES RECOMMENDED BY THE AMERICAN ELECTRICIANS HANDBOOK (LATEST EDITION) & SHALL BE SUBJECTED TO THE APPROVAL OF THE AGENCY WHO HAS THE JURISDICTION & THE ENGINEER.
4. ANY DEVICE MAY RELOCATED WITHIN TEN FEET OF THE LOCATION SHOWN ON THE DRAWING PRIOR TO INSTALLATION AT THE DIRECTION OF THE ENGINEER & AT NO ADDITIONAL COST TO THE OWNER.
5. METALLIC ENCLOSURES, RACEWAYS & ELECTRICAL EQUIPMENT SHALL BE GROUNDED ACCORDING TO THE REQUIREMENTS OF NEC ARTICLE 250, PROVIDE GROUND WIRE IN EVERY RACEWAYS. SIZE ACCORDING TO NEC TABLE 250-95. OBTAIN & PAY FOR PERMITS & ARRANGE & PAY FOR CONSTRUCTION UTILITIES.
6. COORDINATE WITH THE MECHANICAL CONTRACTOR FOR EQUIPMENT REQUIREMENTS & PROVIDE ALL WIRING & PROTECTION EQUIPMENT REQUIRED.
7. CONDUIT SHALL BE EMT (DRY LOCATIONS CONCEALED ABOVE GRADE), PVC ENCASED IN CONCRETE & BELOW GRADE, ALUMINUM (EXPOSED INSTALLATION) FLEXIBLE CONDUIT SHALL BE JACKETED TYPE & ACCORDING TO NEC ARTICLE 350.
8. WIRING SHALL BE NEC TYPE THWN, THHN, OR XHHW, 600 V. CONDUCTORS SHALL BE COPPER.
9. PANEL BOARD SHALL BE COMPLETE WITH BUS, ENCLOSURE & TRIM, COMPLETE OF MOLDED PLASTIC CASE CIRCUIT BREAKERS (BOLT ON TYPE), WITH RATINGS AS INDICATED & COMPLETE TYPE CIRCUIT DIRECTORY.
10. TEST IN THE PRESENCE OF ENGINEER RESULTS SUBMITTED FOR APPROVAL BY THE ENGINEER.
    a. OPERATION TEST
    b. INSULATION RESISTANCE TEST
    c. GROUND RESISTANCE TEST
11. ANY DISCREPANCY IN LOCATIONS & RATINGS OF EQUIPMENT & APPARATUS SHALL BE VERIFIED WITH THE OWNER OR ANY OF HIS REPRESENTATIVES & CHANGES SHALL BE MADE ACCORDINGLY.
12. FOR EACH SPARE BRANCH CIRCUIT IN PANEL BOARD PROVIDE 3/4"Ø EMPTY CONDUIT TERMINATED TO 4" OCTAGONAL BOX ABOVE CEILING.
13. PROVIDE GA. 16 G.I. PULL WIRES IN ALL SPARE DUCT & EMPTY CONDUITS.

TWO-GANG SINGLE SWITCH	S	25W WALL LIGHT	WL
TWO-GANG SINGLE SWITCH	abS	18W PINLIGHT	
THREE -GANG SINGLE SWITCH	abcS	28W T-5 FLUORENSCENT LAMP FOR COVE LIGHTING	
3 WAY SWITCH	3wS	PANEL BOARD	PB
TELEPHONE OUTLET / INTERCOM	TEL	TELEPHONE PULLBOX	TPB
LAN/DATA OUTLET	LAN	FIRE ALARM CONTROL PANEL	FACP
SMOKE DETECTOR - ADDRESSABLE	SD	EMERGENCY LIGHT	
ADDRESSABLE STROBE LIGHT WITH HORN	110cd HL	PUBLIC AUTOMATIC BRANCH EXCHANGE	PABX
		SWITCH RUN	
		CIRCUIT HOME RUN	
		CIRCUIT NUMBER	PPE-01
		FLOOR MOUNTED C.O	FM
		CONVENIENCE OUTLET - 1 SOCKET	
		CONVENIENCE OUTLET - 2 SOCKET	
		COUNTER TOP CONVENIENCE OUTLET	CT
		WEATHERPROOF CONVENIENCE OUTLET	WP
		SPECIAL PURPOSED OUTLET	SPO
		JUNCTION BOX	J
		kW-hr METER	M

ARCHITECTS
P.O. Box 6
Kolonia, POHNPEI
FSM 96941
Tel. (691) 320-2966
email add.:
archrsroque@yahoo.com

CONSULTANT
R.C.D ELECTRICAL DESIGN & CONSULTANCY
ENGR: JOSELITO REYES

PROPOSED DECEM/NEOC BLDG EXPANSION & REFURBISHING (PALIKIR GOV.CAMPUS)

CONTENTS
- EXISTING SITE PLAN

Approved

Approved

REVISION	BY

DATE: JUNE, 2017
SCALE: AS SHOWN
DRAWN:
JOB:
SHEET
E-001

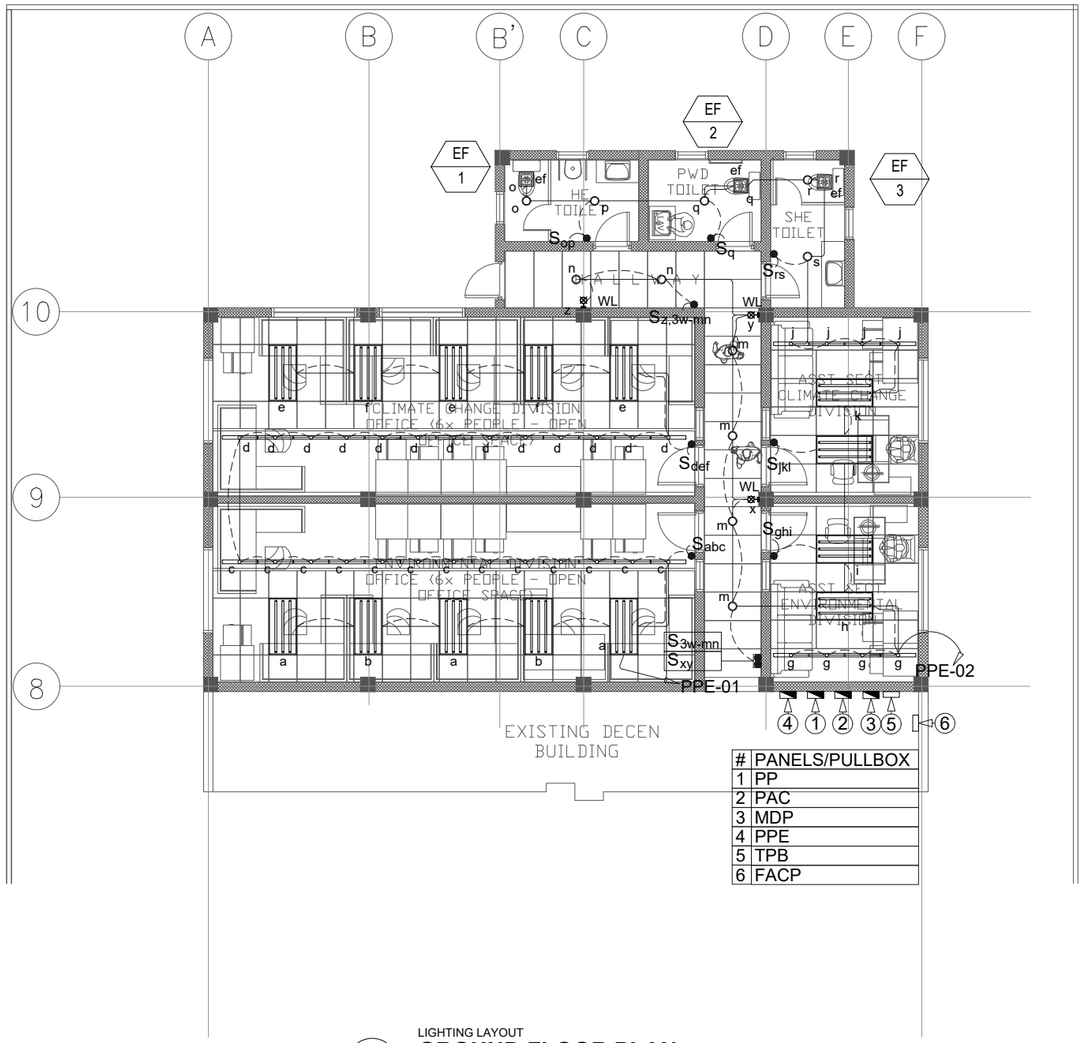

1 E 002 LIGHTING LAYOUT
GROUND FLOOR PLAN
SCALE 3/32 : 1

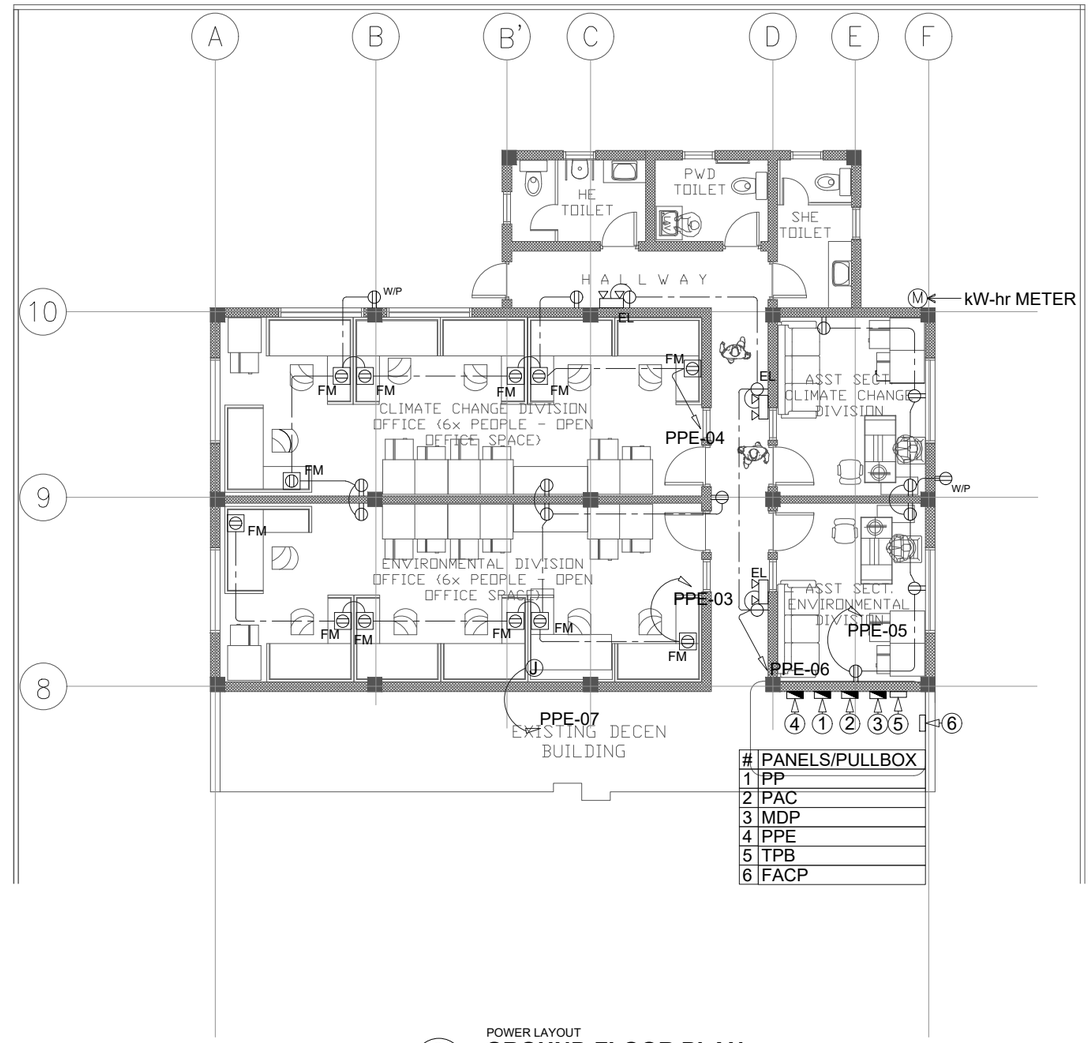

2 E 002 POWER LAYOUT
GROUND FLOOR PLAN
SCALE 3/32 : 1

ARCHITECTS
P.O. Box 6
Kolonia, POHNPEI
FSM 96941
Tel. (691) 320-2966
email add.:
archrsroque@yahoo.com

CONSULTANT
R.C.D ELECTRICAL DESIGN & CONSULTANCY
ENGR: JOSELITO REYES

PROPOSED DECEM/NEOC BLDG EXPANSION & REFURBISHING (PALIKIR GOV.CAMPUS)

CONTENTS
- EXISTING SITE PLAN

Approved
Approved

REVISION	BY

DATE: JUNE, 2017
SCALE: AS SHOWN
DRAWN:
JOB:
SHEET
E-002

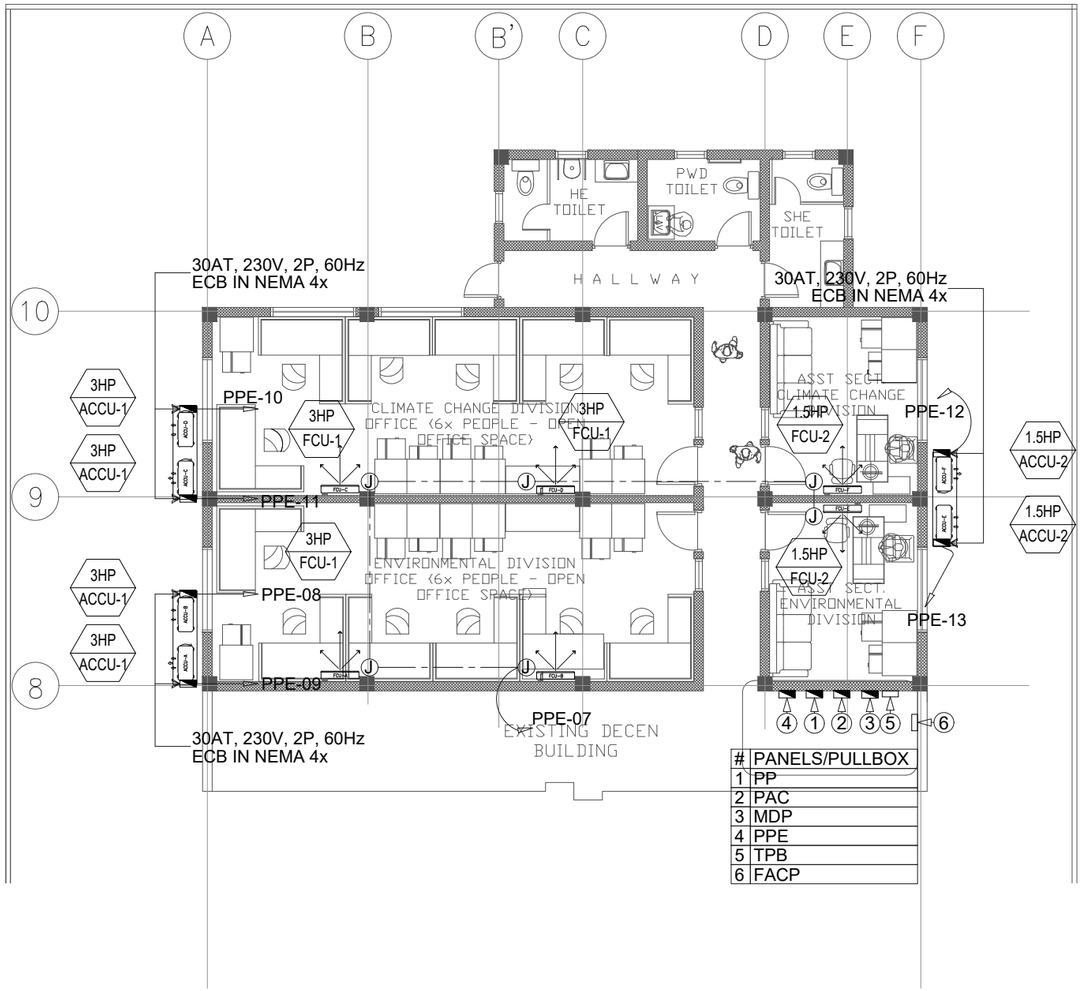

1 E 003 A/C POWER SUPPLY LAYOUT
GROUND FLOOR PLAN
SCALE 3/32 : 1

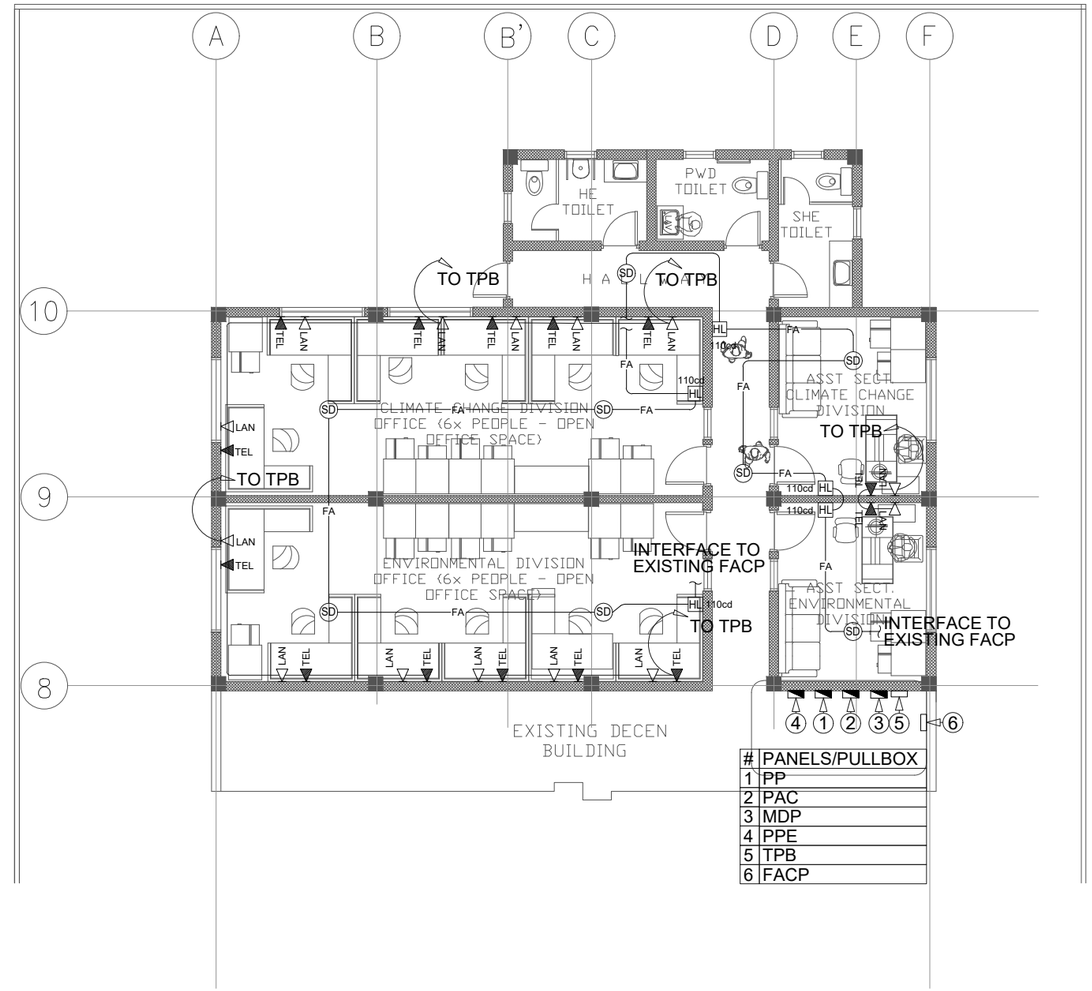

2 E 003 AUXILIARY LAYOUT
GROUND FLOOR PLAN
SCALE 3/32 : 1

ARCHITECTS
P.O. Box 6
Kolonia, POHNPEI
FSM 96941
Tel. (691) 320-2966
email add.:
archrsroque@yahoo.com

CONSULTANT

R.C.D ELECTRICAL DESIGN & CONSULTANCY

ENGR: JOSELITO REYES

PROPOSED DECEM/NEOC BLDG EXPANSION & REFURBISHING (PALIKIR GOV.CAMPUS)

CONTENTS

- EXISTING SITE PLAN

Approved

Approved

REVISION	BY

DATE: JUNE, 2017

SCALE: AS SHOWN

DRAWN:

JOB:

SHEET

E-003

RECOMMENDED CONDUIT FILL		
CONDUIT TRADE SIZE	CABLE OUTSIDE DIAMETER (in)	
	CAT 5e (0.18")	CAT 6 (0.23")
16mm (1/2 in.)	1	0
21mm (3/4 in.)	6	5
27mm (1 in.)	11	8
35mm (1 1/4 in.)	19	14
41mm (1 1/2 in.)	25	19
53mm (2 in.)	53	32
63mm (2 1/2 in.)	75	46
78mm (3 in.)	116	71
91mm (3 1/2 in.)	154	95
103mm (4 in.)	199	122

WIRE CODE
4t
- WERE: t = CAT6 CABLE
- WERE: 4 = NUMBER OF CABLE

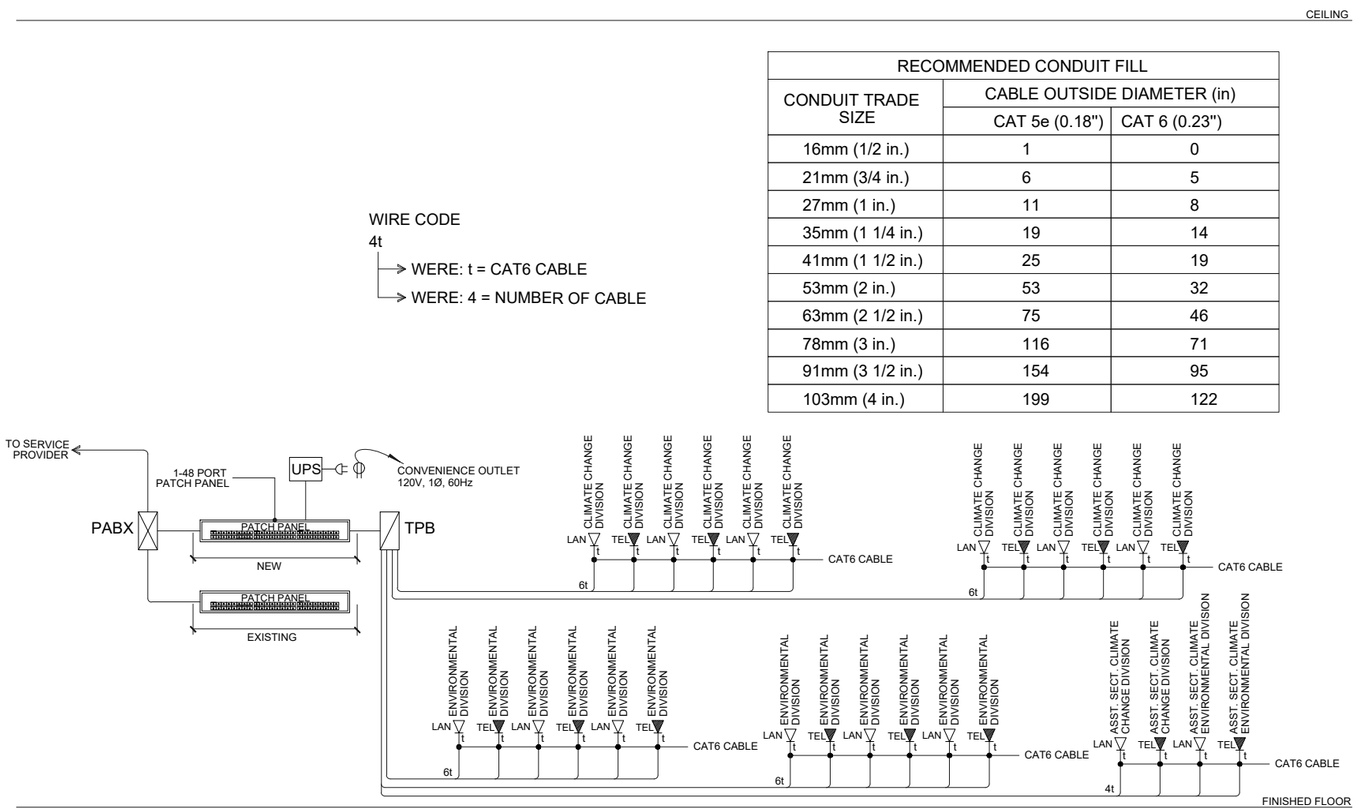

LAN & TEL. SINGLE LINE DIAGRAM
1 / E 004
GROUND FLOOR PLAN
SCALE 3/32 : 1

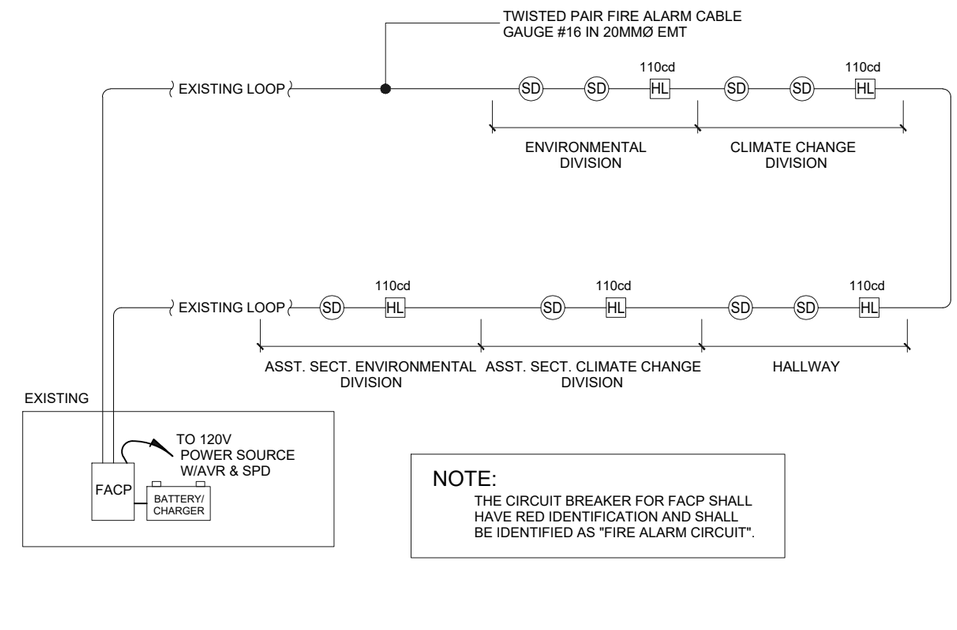

FDAS SINGLE LINE DIAGRAM
2 / E 004
GROUND FLOOR PLAN
SCALE 3/32 : 1

ARCHITECTS
P.O. Box 6
Kolonia, POHNPEI
FSM 96941
Tel. (691) 320-2966
email add.:
archrsroque@yahoo.com

CONSULTANT
R.C.D ELECTRICAL DESIGN & CONSULTANCY
ENGR: JOSELITO REYES

PROPOSED DECEM/NEOC BLDG EXPANSION & REFURBISHING (PALIKIR GOV.CAMPUS)

CONTENTS
- EXISTING SITE PLAN

Approved
Approved

REVISION	BY

DATE: JUNE, 2017
SCALE: AS SHOWN
DRAWN:
JOB:
SHEET
E-004

WIRING SCHEDULE (COPPER) - 120V

WIRE CODE	FEEDER LINE			GROUND WIRE	CONDUIT		
1W+N	mm sq. THHN	AWG/MCM	AMPACITY	mm sq. THHN	mmF (inchF) EMT	mmF (inchF) IMC	mmF (inchF) PVC
X0	3.5	12	30	3.5	16 (1/2)	16 (1/2)	16 (1/2)
X1	5.5	10	40	4.0	16 (1/2)	16 (1/2)	16 (1/2)
X2	8.0	8	55	5.5	21 (3/4)	21 (3/4)	21 (3/4)
X3	14	6	75	8.0	21 (3/4)	21 (3/4)	27 (1)
X4	22	4	95	8.0	27 (1)	27 (1)	27 (1)
X5	30	2	115	8.0	35 (1 1/4)	35 (1 1/4)	35 (1 1/4)
X6	38	1	130	8.0	35 (1 1/4)	35 (1 1/4)	35 (1 1/4)
X7	50	1/0	150	14	41 (1 1/2)	41 (1 1/2)	41 (1 1/2)
X8	60	2/0	170	22	53 (2)	41 (1 1/2)	41 (1 1/2)
X9	80	3/0	205	22	53 (2)	53 (2)	53 (2)
X10	100	4/0	240	22	53 (2)	53 (2)	53 (2)
X11	125	250	285	30	63 (2 1/2)	63 (2 1/2)	63 (2 1/2)
X12	150	300	320	30	63 (2 1/2)	63 (2 1/2)	63 (2 1/2)
X13	200	400	360	30	63 (2 1/2)	78 (3)	78 (3)
X14	250	500	425	30	78 (3)	78 (3)	78 (3)

WIRING SCHEDULE (COPPER) - 240V

WIRE CODE	FEEDER LINE			GROUND WIRE	CONDUIT		
2W+G	mm sq. THHN	AWG/MCM	AMPACITY	mm sq. THHN	mmF (inchF) EMT	mmF (inchF) IMC	mmF (inchF) PVC
S0	3.5	12	30	3.5	16 (1/2)	16 (1/2)	16 (1/2)
S1	5.5	10	40	4.0	16 (1/2)	16 (1/2)	16 (1/2)
S2	8.0	8	55	5.5	21 (3/4)	21 (3/4)	21 (3/4)
S3	14	6	75	8.0	27 (1)	27 (1)	27 (1)
S4	22	4	95	8.0	27 (1)	27 (1)	27 (1)
S5	30	2	115	8.0	35 (1 1/4)	35 (1 1/4)	35 (1 1/4)
S6	38	1	130	8.0	41 (1 1/2)	41 (1 1/2)	41 (1 1/2)
S7	50	1/0	150	14	41 (1 1/2)	41 (1 1/2)	41 (1 1/2)
S8	60	2/0	170	22	53 (2)	53 (2)	53 (2)
S9	80	3/0	205	22	53 (2)	53 (2)	53 (2)
S10	100	4/0	240	22	63 (2 1/2)	63 (2 1/2)	63 (2 1/2)
S11	125	250	285	30	63 (2 1/2)	63 (2 1/2)	63 (2 1/2)
S12	150	300	320	30	63 (2 1/2)	78 (3)	78 (3)
S13	200	400	360	30	78 (3)	78 (3)	78 (3)
S14	250	500	425	30	78 (3)	91 (3 1/2)	91 (3 1/2)

PPE (POWER PANELBOARD EXTENSION) : (60AT,63AF, 2P, 240V, 25kAIC)

LOCATION: EXISTING LT. ROOM
ENCLOSURE: NEMA 1
MOUNTING: SURFACE MOUNTED
FED FROM: MDP (MECHANICAL LUGS)

TYPICAL TO:
WIRE CODE: S3
SET(S):

CKT. NO.	LOAD DESCRIPTION	VOLTS	VA	AMPERE	LOAD AMPERE AN	LOAD AMPERE BN	CB RATING AT	CB RATING AF	CB RATING POLE	CB RATING KAIC	NO. OF SETS	CODE
1	56-28WT5 FLUORESCENT LIGHT	120	1743	14.53	14.53		20	50	1	10	1	X0
2	38-28W T5 FLUO. LGHT, 5-18W PIN LIGHT, 3-25W WALL LIGHT & 3-23 E.F.	120	1442	12.02		12.02	20	50	1	10	1	X0
3	9-180VA CONVENIENCE OUTLET	120	1620	13.50	13.50		20	50	1	10	1	X0
4	10-180VA CONVENIENCE OUTLET	120	1800	15.00		15.00	20	50	1	10	1	X0
5	7-180VA CONVENIENCE OUTLET	120	1260	10.50	10.50		20	50	1	10	1	X0
6	3 - 5W EMERGENCY LIGHT	120	17	0.14		0.14	20	50	1	10	1	X0
7	4 - 35 FCU & 2 - 25 FCU	240	211	0.88	0.44	0.44	20	50	2	10	1	S0
8	3HP ACCU, 230V, 60Hz	240	2434	10.14	5.07	5.07	30	50	2	10	1	S1
9	3HP ACCU, 230V, 60Hz	240	2434	10.14	5.07	5.07	30	50	2	10	1	S1
10	3HP ACCU, 230V, 60Hz	240	2434	10.14	5.07	5.07	30	50	2	10	1	S1
11	3HP ACCU, 230V, 60Hz	240	2434	10.14	5.07	5.07	30	50	2	10	1	S1
12	1.5HP ACCU, 230V, 60Hz	240	1667	6.95	3.47	3.47	30	50	2	10	1	S1
13	1.5HP ACCU, 230V, 60Hz	240	1667	6.95	3.47	3.47	30	50	2	10	1	S1
14	SPARE	240					30	50	2	10		
	TOTAL CONNECTED LOAD		21,163	121.02	66.19	54.83						

COMPUTATIONS :

I = TOTAL HPA*70% DF + I3P + HRM * 25%

= 48.87

MINIMUM AMPACITY OF MAIN FEEDER x 125%

= 61.09

1 E 005 **LOAD SCHEDULE & COMPUTATIONS**
SCALE NTS

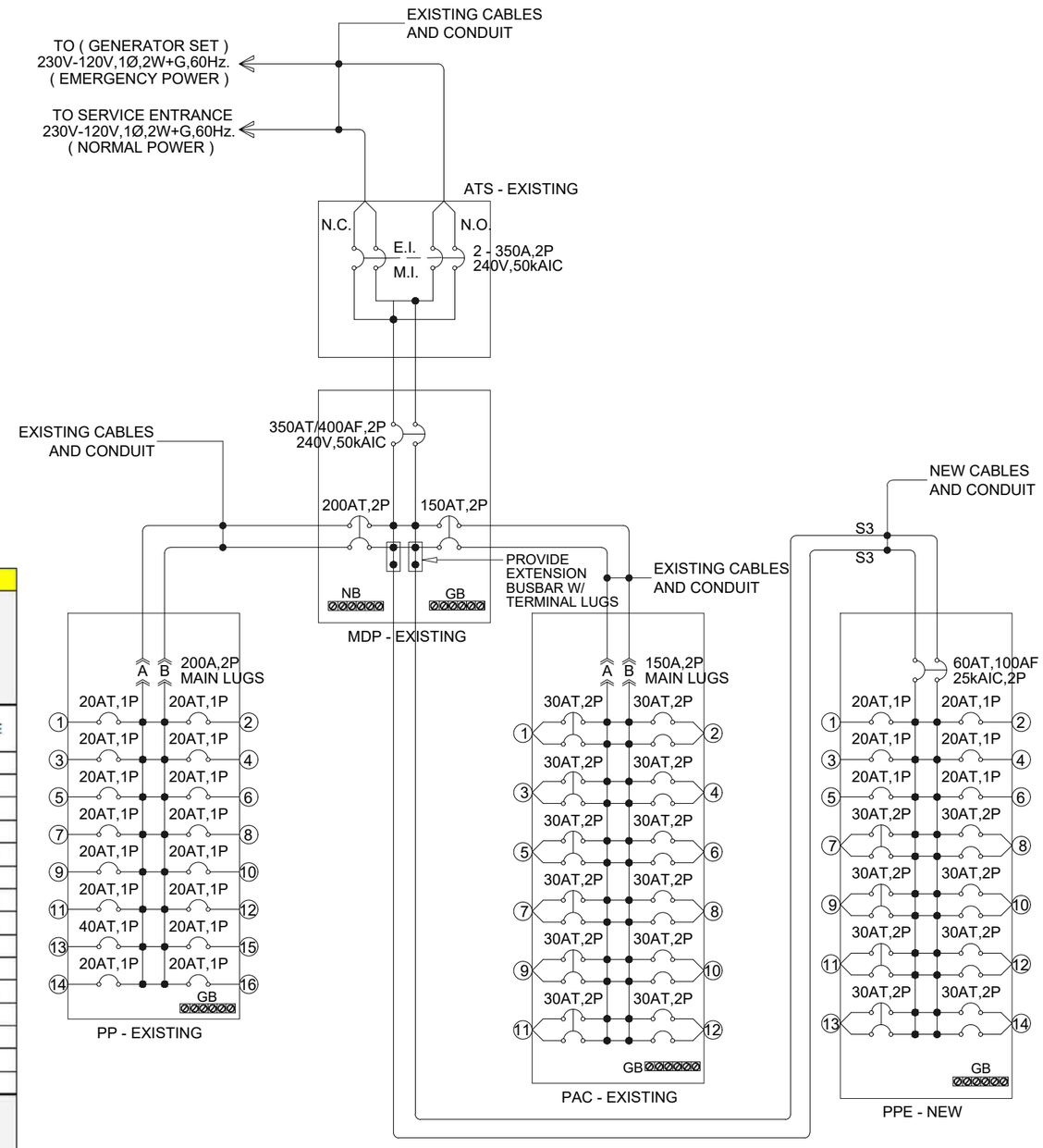

2 E 005 **POWER SINGLE LINE DIAGRAM**
SCALE 3/32 : 1

ARCHITECTS
P.O. Box 6
Kolonia, POHNPEI
FSM 96941
Tel. (691) 320-2966
email add.: archrsroque@yahoo.com

CONSULTANT
R.C.D ELECTRICAL DESIGN & CONSULTANCY
ENGR: JOSELITO REYES

PROPOSED DECEM/NEOC BLDG EXPANSION & REFURBISHING (PALIKIR GOV.CAMPUS)

CONTENTS
- EXISTING SITE PLAN

Approved
Approved

REVISION	BY

DATE: JUNE, 2017
SCALE: AS SHOWN
DRAWN:
JOB:
SHEET
E-005

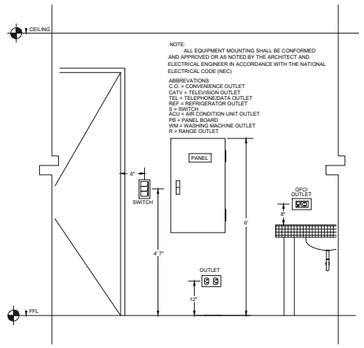

1 EE 06 TYPICAL MOUNTING DETAILS
SCALE NTS

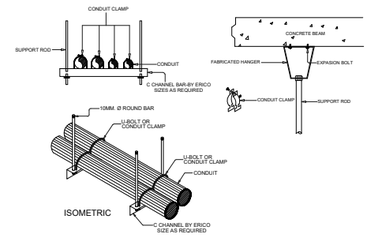

2 EE 06 CONDUIT SUPPORT & HANGER DETAIL
SCALE NTS

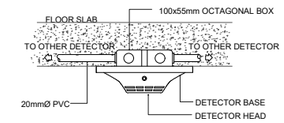

3 EE 06 SMOKE DETECTOR SURFACE MOUNTED DETAIL
SCALE NTS

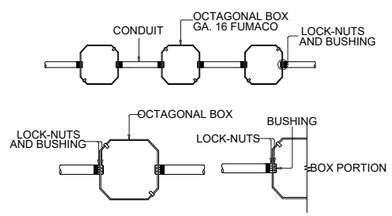

4 EE 06 CONDUIT ON BOX INSTALLATION DETAIL
SCALE NTS

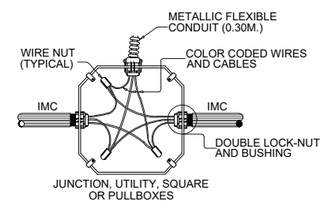

5 EE 06 BOX CONNECTION DETAIL
SCALE NTS

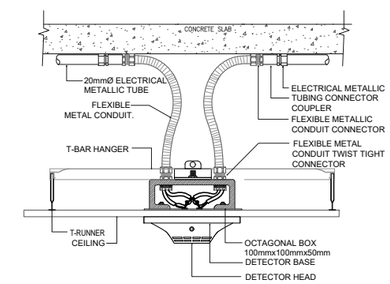

6 EE 06 SMOKE & HEAT DETECTOR CEILING SUSPENDED DETAIL
SCALE NTS

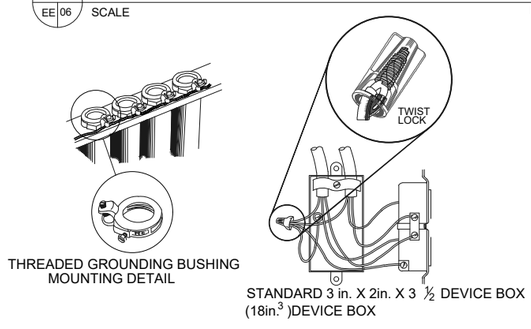

5 EE 06 GROUNDING INSTALLATION DETAILS
SCALE NTS

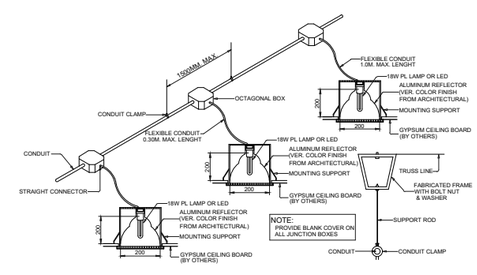

6 EE 06 CONDUIT RUN FOR LIGHTING DISTRIBUTION IN ONE CIRCUIT (FOR EXPOSED OR INSIDE DROP-CEILING INSTALLATION)
SCALE NTS

ARCHITECTS
P.O. Box 6
Kolonia, POHNPEI
FSM 96941
Tel. (691) 320-2966
email add.:
archsroque@yahoo.com

CONSULTANT
R.C.D ELECTRICAL DESIGN & CONSULTANCY
ENGR: JOSELITO REYES

PROPOSED DECEM/NEOC BLDG EXPANSION & REFURBISHING (PALIKIR GOV.CAMPUS)

CONTENTS
- EXISTING SITE PLAN

Approved

Approved

REVISION	BY

DATE: JUNE, 2017
SCALE: AS SHOWN
DRAWN:
JOB:
SHEET
E-006

AIR COOLED CONDENSING UNIT (DX INVERTER TYPE)

UNIT DESIGNATION	QTY.	AREA SERVED	COOLING CAPACITY	OPERATING TEMPERATURE				COMPRESSOR DATA					CONDENSER DATA						APPROXIMATE OPERATING WEIGHT (KGS)	R E M A R K S
			HORSEPOWER	EVAPORATING		CONDENSING		NO.	KW INPUT	ELECTRICAL SUPPLY			NO. OF PROPELLER FAN	DRIVE	WATTS	ELECTRICAL SUPPLY				
				°C	°F	°C	°F			VOLTS	PHASE	CYCLE				VOLTS	PHASE	CYCLE		
ACCU-1	4	CLIMATE CHANGE DIVISION, ENVIRONMENTAL DIVISION	3	4.44	40	48.8	120	1	2.19	230	1	60	1	DIRECT	55	230	1	60	45	UNIT SHALL BE SUITABLE FOR OUTDOOR INSTALLATION PROVIDE WITH SAFETY DEVICES, TIMER MOTOR FOR COMPRESSOR, ANTI-CYCLING HIGH & LOW PRESSURE CONTROLS, VIBRATION ISOLATORS AND OTHER STANDARD ACCESSORIES. SIMILAR TO DAIKIN INVERTER TYPE OR APPROVED EQUAL.
ACCU-2	2	ASST. SECT. CLIMATE CHANGE DIVISION, ASST. SECT. ENVIRONMENTAL DIVISION	1.5	4.44	40	48.8	120	1	1.50	230	1	60	1	DIRECT	55	230	1	60	45	

FAN COIL UNIT (DX INVERTER TYPE)

UNIT DESIGNATION	QTY.	AREA SERVED	COOLING CAPACITY	AIR FLOW CAPACITY		COIL DATA			FAN MOTOR DATA						APPROXIMATE OPERATING WEIGHT (KGS)	R E M A R K S
			HORSEPOWER	CFM	CMH	NO. OF CIRCUITS	NO. OF ROWS	FPI	DRIVE	HP	WATTS	ELECTRICAL SUPPLY				
												VOLTS	PHASE	CYCLE		
FCU-1	4	CLIMATE CHANGE DIVISION, ENVIRONMENTAL DIVISION	3	635	1,079	1	3	12	DIRECT	0.047	35	230	1	60	20	UNIT SHALL BE HI-WALL TYPE, FREE BLOW COMPLETE WITH DISPOSABLE OR WASHABLE TYPE AIR FILTERS WITH AIR PURIFIER, PLASMA FILTER, H1N1 FILTER, DEODORIZING FILTER, FITTINGS, VIBRATION ISOLATORS, WIRELESS REMOTE CONTROLLED AND OTHER STANDARD ACCESSORIES. SIMILAR TO LG AIRCON OR DAIKIN INVERTER TYPE OR APPROVED EQUAL.
FCU-2	2	ASST. SECT. CLIMATE CHANGE DIVISION, ASST. SECT. ENVIRONMENTAL DIVISION	1.5	317	539	1	3	12	DIRECT	0.033	25	230	1	60	15	UNIT SHALL BE HI-WALL TYPE, FREE BLOW COMPLETE WITH DISPOSABLE OR WASHABLE TYPE AIR FILTERS WITH AIR PURIFIER, PLASMA FILTER, H1N1 FILTER, DEODORIZING FILTER, FITTINGS, VIBRATION ISOLATORS, WIRELESS REMOTE CONTROLLED AND OTHER STANDARD ACCESSORIES. SIMILAR TO LG AIRCON OR DAIKIN INVERTER TYPE OR APPROVED EQUAL.

VENTILATING EQUIPMENT

UNIT DESIGNATION	QTY.	AREA SERVED	AIRFLOW QUANTITY		TOTAL STATIC PRESSURE		MOTOR DATA						R E M A R K S
			CMH	CFM	Pa.	INCH	DRIVE	HP	KW	ELECTRICAL SUPPLY			
										VOLTS	PHASE	CYCLE	
EF	3	PWD TOILET, MALE/FEMALE TOILET	255	150	64	0.25	DIRECT	0.030	0.023	230	1	60	UNIT SHALL BE CEILING MOUNTED, DUCTED TYPE COMPLETE WITH BACKFLOW DAMPER SIMILAR TO KDK MODEL 27CHH OR APPROVED EQUAL.

LEGENDS, SYMBOLS & ABBREVIATION

SYMBOL/ ABBREV.	DESCRIPTION	ABBREV.	DESCRIPTION
ACU / FCU	EQUIPMENT TAG	FCU	FAN COIL UNIT
	AIR COOLED CONDENSING UNIT	ACCU	AIR COOLED CONDENSING UNIT
CEF	CEILING EXHAUST FAN DUCTED TYPE	CFM	CUBIC FEET PER MINUTE
EF	EXHAUST FAN	CMH	CUBIC METER PER HOUR
DC	A/C DRAIN CONNECTION	FPI	FEET PER INCH
KW	KILOWATTS	HP	HORSEPOWER
HP	HORSEPOWER		
TR	TONS OF REFRIGERATIONS		
BTU/HR	BRITISH THERMAL UNIT PER HOUR		

GENERAL NOTES

1. ALL DIMENSIONS ARE IN INCHES UNLESS OTHERWISE NOTED.
2. ALL DUCT DIMENSION INDICATE INSIDE CLEAR DIMENSION IN INCHES.
3. ALL DUCTWORK TO BE FABRICATED IN ACCORDANCE WITH SMACNA STANDARDS.
4. ALL HVAC EQUIPMENT AND ACCESSORIES SHALL BE INSTALL AS PER MANUFACTURER'S INSTALLATION DETAIL.
5. ALL CONTROL SWITCHES SHALL BE ADJACENT TO ROOM LIGHT SWITCH UNLESS OTHERWISE INDICATED.
6. CONSTRUCTION SHALL CONFORM TO LOCAL BUILDING CODES AND STANDARDS. SHOULD THE CONTRACTOR PERFORM ANY WORK THAT DOES NOT COMPLY WITH THE ABOVE, HE SHALL BEAR ALL COSTS ARISING IN CORRECTING THESE DEFICIENCIES.
7. THIS DRAWING SHALL BE READ IN CONJUNCTION WITH THE SPECIFICATION AND RELEVANT DRAWINGS.
8. PIPE ROUTING COULD BE MODIFIED TO SUIT FINAL EQUIPMENT SELECTION AND LOCATION.
9. ALL OPENINGS FOR DUCTS & PIPES SHALL NOT IN ANYWAY PENETRATE A STRUCTURAL RIB ON BEAMS UNLESS OTHERWISE AUTHORIZED AND APPROVED.
10. CONDENSATE DRAIN SIZE TO BE EQUAL TO DRAIN PAN OPENING SIZE OR SIZE INDICATED ON PLANS WHICHEVER IS GREATER.
11. BOLT EQUIPMENT TO CONCRETE PAD AS PER MANUFACTURER & RECOMMENDATION.
12. LOCATION OF CONTROL THERMOSTAT, LOCAL CONTROL PANEL (BLDG) & OTHER SENSORS SHALL BE A CONTRACTORS RESPONSIBILITY TO ENSURE AN EFFICIENT OPERATION OF THE SYSTEM.
13. REFRIGERANT PIPES SHOWN IN THE DRAWINGS ARE SCHEMATIC ONLY. TECHNICAL DETAILS FOR PIPE SIZES AND CONNECTIONS SHALL BE AS PER MANUFACTURER'S RECOMMENDATIONS.
14. THE PROSPECTIVE CONTRACTOR SHALL VISIT AND SURVEY THE PLACE OF INSTALLATION.
15. THERMOSTAT SHALL BE MOUNTED AT 1.5 METERS FROM FINISH FLOOR LEVEL.

NOTES ON REFRIGERANT PIPING INSTALLATION:

1. REFRIGERANT PIPES SHALL BE INTERNALLY CLEANED BY SWABBING WITH CLEAN COTTON CLOTH TO REMOVE ALL DUST, BURRS, AND OTHER MISCELLANEOUS DIRT.
2. WHILE SOLDERING JOINTS, A SWEEP OF INERT NITROGEN GAS SHOULD BE PASSED THRU PIPES TO PREVENT OXIDATION DEPOSITS INSIDE.
3. FITTINGS:
   A. USE STANDARD LONG RADIUS COPPER ELBOWS, REDUCERS, ETC. DO NOT USE FIELD-FORMED ELBOWS, REDUCER ETC.
   B. JOINTS BETWEEN PIPES SHOULD BE THRU STANDARD COPPER COUPLING OR FORMED FITTING MADE BY SWAGING OR ENLARGING ONE PIPE END TO BE ABLE TO RECEIVE THE OTHER PIPE SECTION WOULD NOT BE ALLOWED.
   C. JOINTS TO SCREWED ACCESSORIES SUCH AS EXPANSION VALVES, FILTER DRIER, ETC. SHALL BE MADE WITH STANDARD FLARED.
4. THE COMPLETED PIPING INSTALLATION SHOULD BE LEAK TESTED BY SUBJECTING THE SAME (BOTH LIQUID AND SUCTION LINE) TO A PRESSURE OF 3100kPa USING DRY NITROGEN GAS. THIS PRESSURE SHOULD BE LEFT FOR 42 HOURS AND IF THERE IS NO NOTICEABLE REDUCTION IN PRESSURE WITHIN THE PERIOD. THE NITROGEN CHARGE SHALL BE RELIEVED FOR THE EQUIPMENT CONNECTION. IF THERE IS NOTICEABLE IN THE TEST PRESSURE, LEAK SHOULD BE LOCATED AND REPAIRED.
5. PROPERLY TESTED PIPING SHOULD BE SECURELY CAPPED AT BOTH END AND WITH HOLDING CHARGED AS STATED IN ITEM 4 ABOVE WHILE WAITING FOR FINAL CONNECTION TO EQUIPMENT. INSULATE SUCTION PIPING ONLY AFTER PROPER LEAK TESTING.

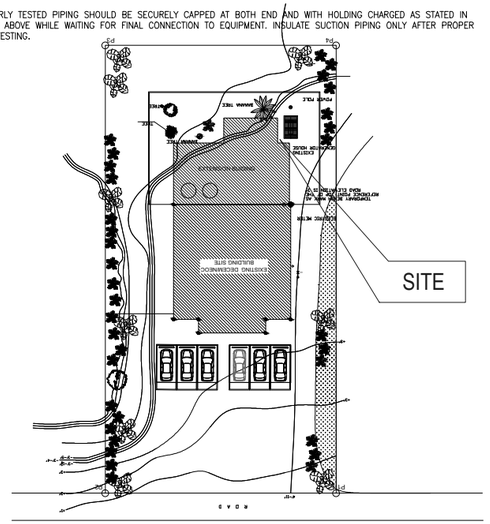

1 M 001 **SITE DEVELOPMENT PLAN**
NOT TO SCALE

ARCHITECTS
P.O. Box 6
Kolonia, POHNPEI
FSM 96941
Tel. (691) 320-2966
email add.:
archsroque@yahoo.com

CONSULTANT

BRYANT SALAS ROQUE
A.C. N0.0024015
PHILIPPINES
REGISTERED ARCHITECT

PROPOSED DECEM/NEOC BLDG EXPANSION & REFURBISHING (PALIKIR GOV.CAMPUS)

CONTENTS
- EXISTING SITE PLAN

Approved

Approved

REVISION	BY

DATE: JUNE, 2017
SCALE: AS SHOWN
DRAWN:
JOB:
SHEET
M-001

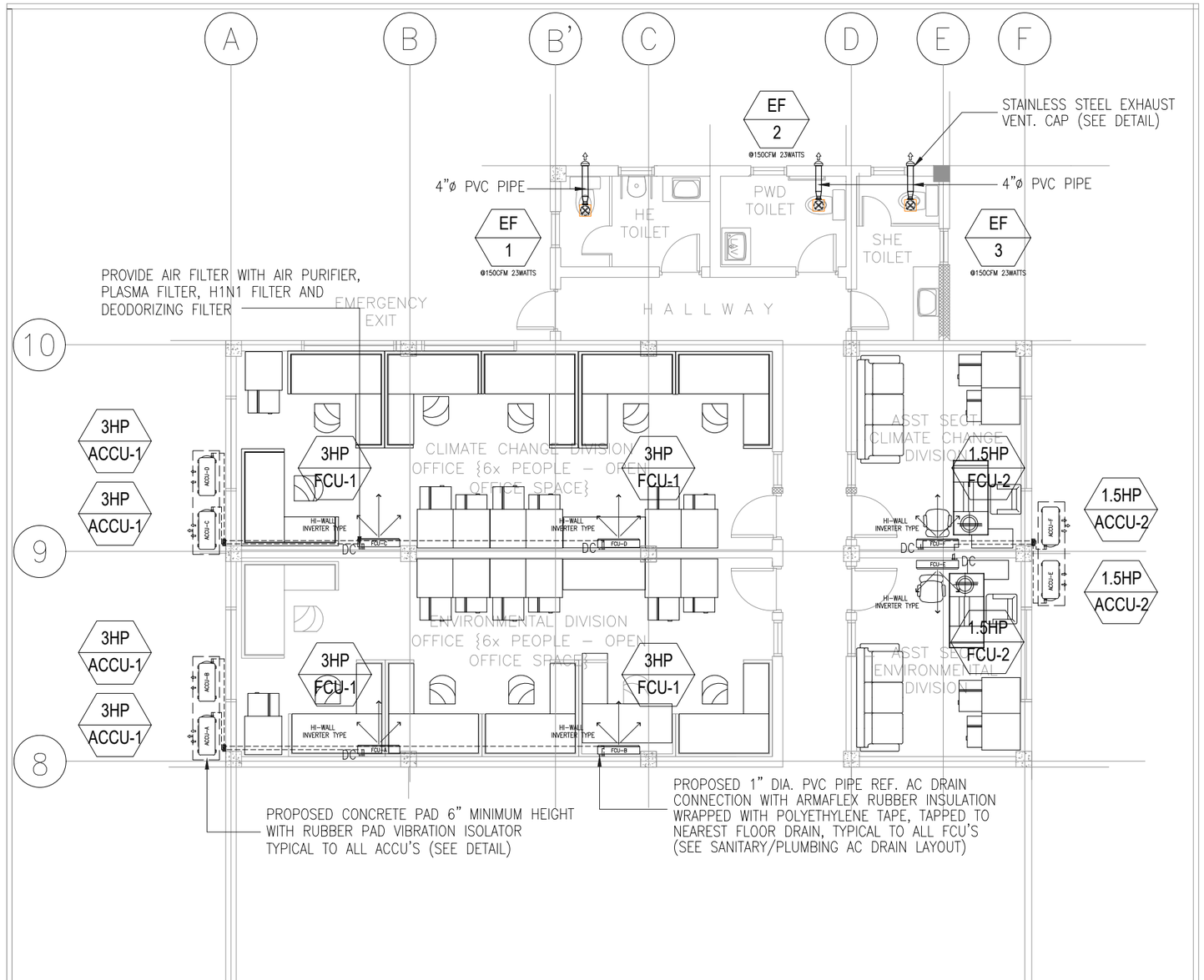

ARCHITECTS
P.O. Box 6
Kolonia, POHNPEI
FSM 96941
Tel. (691) 320-2966
email add.:
archrsroque@yahoo.com

CONSULTANT

RYAN SALAS ROQUE
REG. NO.0024015
PHILIPPINES
REGISTERED ARCHITECT

PROPOSED DECEM/NEOC BLDG EXPANSION & REFURBISHING (PALIKIR GOV.CAMPUS)

CONTENTS

- EXISTING SITE PLAN

Approved

Approved

REVISION	BY

DATE: JUNE, 2017

SCALE: AS SHOWN

DRAWN:

JOB:

SHEET

M-002

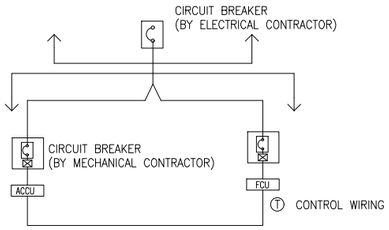

C O N T R O L D E S C R I P T I O N S

1. THERMOSTAT Ⓣ SHALL HAVE OFF FAN COOL CONTROL.
2. SWICTH TO FAN SHALL START FCU FAN.
3. SWICTH TO COOL (FAN) SHALL START THE ACCU WITH FAN ON
4. THERMOSTAT SHALL CYCLE THE ACCU TO MAINTAIN ROOM TEMPERATURE AT 24°C

ELECTRICAL RISER AND CONTROL DIAGRAM

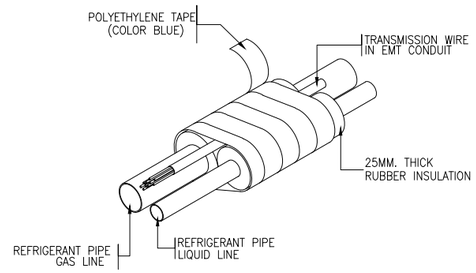

REFRIGERANT PIPE DETAIL

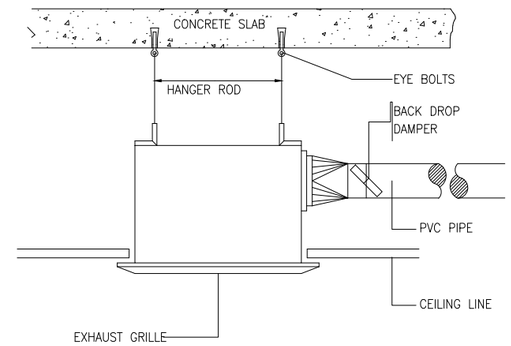

EXHAUST FAN INSTALLATION DETAIL

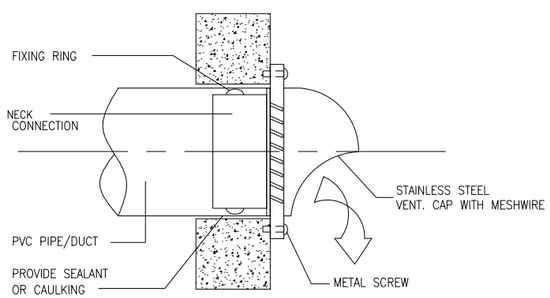

EXHAUST AIR GRILLE/SCREEN

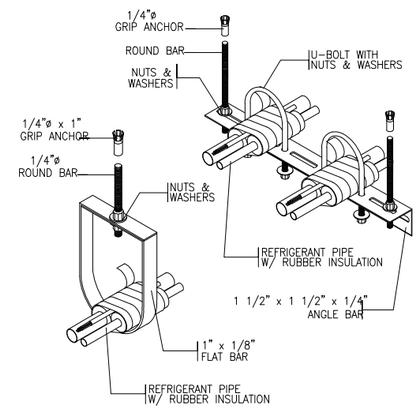

REFRIGERANT PIPE HANGER AND SCHEDULE DETAIL

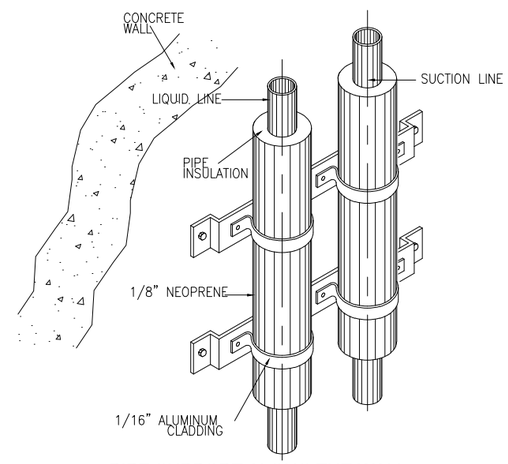

PIPE SUPPORT ALONG THE WALL

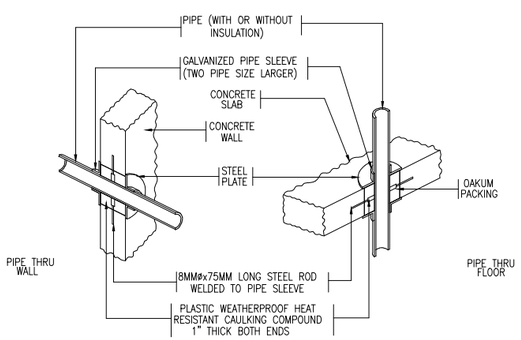

PIPE PASSING THRU WALL/FLOOR DETAIL

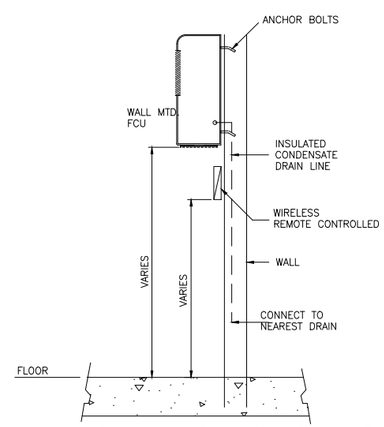

FCU WALL MOUNTED INSTALLATION DETAIL

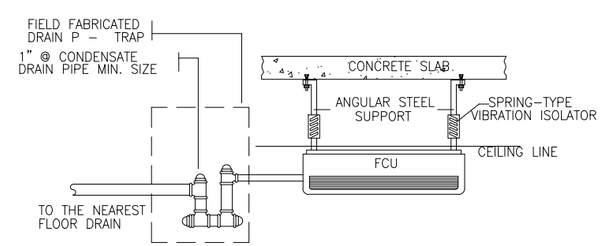

FCU DRAIN CONNECTION DETAIL

ARCHITECTS
P.O. Box 6
Kolonia, POHNPEI
FSM 96941
Tel. (691) 320-2966
email add.:
archrsroque@yahoo.com

CONSULTANT

PROPOSED DECEM/NEOC BLDG EXPANSION & REFURBISHING (PALIKIR GOV.CAMPUS)

CONTENTS

- EXISTING SITE PLAN

Approved

Approved

REVISION	BY

DATE: JUNE, 2017

SCALE: AS SHOWN

DRAWN:

JOB:

SHEET

M-003

GENERAL NOTES

1	ALL PLUMBING WORKS INCLUDED HEREIN SHALL BE EXECUTED ACCORDING TO THE INTERNATIONAL PLUMBING CODE, THE NATIONAL BUILDING CODE, AND THE RULES AND REGULATION OF LOCAL GOVERNMENT AUTHORITIES CONCERNED.
2	COORDINATE THE DRAWING WITH OTHER RELATED DRAWINGS AND SPECIFICATIONS, THE ENGINEER SHALL BE NOTIFIED IMMEDIATELY OF ANY DISCREPANCY FOUND THEREIN.
3	ALL PIPES SHALL BE INSTALLED AS INDICATED ON PLANS, ANY RELOCATIONS REQUIRED FOR PROPER EXECUTIONS OF OTHER TRADES SHALL BE WITH PRIOR APPROVAL OF THE ARCHITECT OR ENGINEER.
4	PROPOSED SANITARY UTILITIES SHALL CONFORM TO THE ACTUAL LOCATION, DEPTH AND INVERT ELEVATION OF ALL EXISTING PIPES AND STRUCTURES AS VERIFIED BY THE CONTRACTOR.
5	ALL SLOPES FOR HORIZONTAL DRAINAGES SHALL MAINTAIN 1% UNLESS OTHERWISE SPECIFIED.
6	SIZES OF WATER SUPPLY PIPES TO FIXTURES SHALL BE IN ACCORDANCE WITH THE MANUFACTURERS INSTRUCTIONS.
7	THE CONTRACTOR SHALL VERIFY ALL EXISTING UTILITIES AT SITE AND COORDINATES THE WORKS WITH THE SEWER LINE EFFLUENT DISPOSSAL POINT AND WATER LINE SERVICE CONNECTING POINT.
8	ALL PIPES SIZES ARE IN MILLIMETERS AND ALL DIMENSIONS ARE IN METERS UNLESS OTHERWISE SPECIFIED.
8	ALL PIPES SHALL BE IN NOMINAL INSIDE DIAMETER

MATERIAL SPECIFICATIONS

DRAINAGE LINES	PVC PIPE SERIES 1000, CLASS 35
	OUTSIDE DRAINAGE LINE SHALL BE CONCRETE DRAIN PIPE (CDP)
	FROM 6"ø TO 10"ø, AND 12" ø AND LARGER SHALL BE
	REINFORCED CONCRETE PIPE (RCP)
SEWER & VENT	PVC PIPE SERIES 1000, CLASS 35
VENT	PVC PIPE SERIES 1000, CLASS 35
COLD WATER LINE	PPR PIPE PN 20
HOT WATER LINE	PPR PIPE PN 20
VALVES	RATED AT MINIMUM PRESSURE
	CAPACITY OF 150 PSI.
FLOOR DRAINS	STAINLESS STEEL/BRASS.
AIRCON DRAINS	PVC PIPE SERIES 1000 W/ 25mmø THK. RUBBER INSULATION
BOOSTER PUMP	SHALL BE UL/FM APPROVED
NOTE :	ALL PIPES SHALL BE NOMINAL IN (INSIDE) DIAMETER

LEGEND AND SYMBOLS

SP / WP	SOIL / WASTE PIPE
VP / VAC	VENT PIPE / VENT PIPE ABOVE CEILING
DP	DRAIN PIPE
CWL / CWLAC	COLD WATER LINE / ABOVE CEILING
GV	GATE VALVE
CV	CHECK VALVE
	WATER LINE WITH PLUG
GV / HB	GATE VALVE / HOSE BIBB
GCO	GROUND CLEAN-OUT
FCO	FLOOR CLEAN-OUT
CCO	CEILING CLEAN-OUT
CDP/RCP	CONCREATE/REINFORCED CONCRETE DRAIN PIPE

EQUIPMENT SCHEDULE

TAG	QUANTITY	UNIT DESIGNATION	LOCATION	TYPE	WATER FLOW GMP/LPS	TOTAL DYNAMIC HEAD/FT FT PSI.	MOTOR DATA			ELECTRICAL CHARACTERISTICS			CONTROLLER	REMARKS
							DRIVE	HP/KW	RPM	VOLTS	PHASE	CYCLE		
BP CPS	1 SETS	CONSTANT PRESSURE SYSTEM BOOSTER PUMP	ROOF DECK AREA	CONSTANT PRESSURE SYSTEM	30 / 2.523	100 / 40	VARIABLE	1 HP EACH	N/A	VER. ELECTL.	1ø	60	N/A	SHALL BE COMPLETE WITH PUMP ACCESORIES

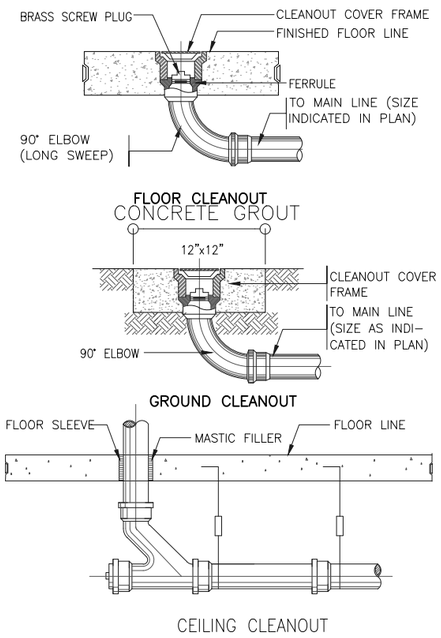

1 CLEANOUT DETAIL
SCALE NTS.

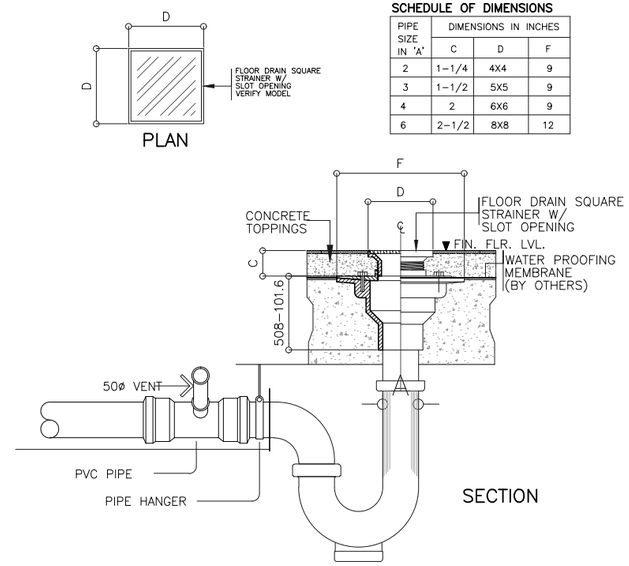

PIPE SIZE IN "A"	DIMENSIONS IN INCHES		
	C	D	F
2	1-1/4	4X4	9
3	1-1/2	5X5	9
4	2	6X6	9
6	2-1/2	8X8	12

2 DETAIL OF FLOOR DRAIN
SCALE NTS.

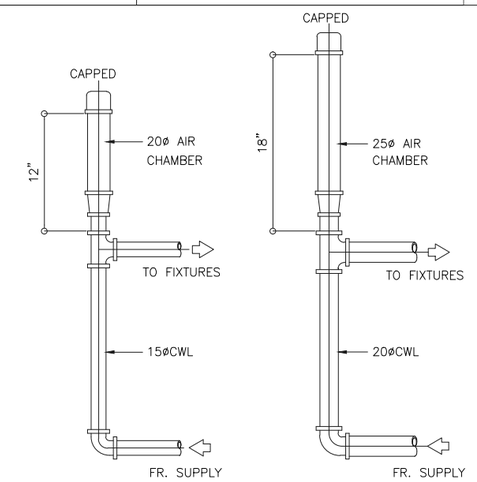

3 AIR-CHAMBER DETAIL
SCALE NTS.

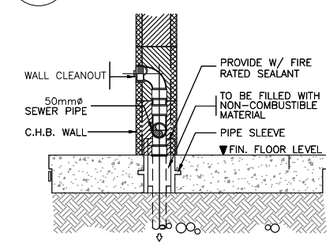

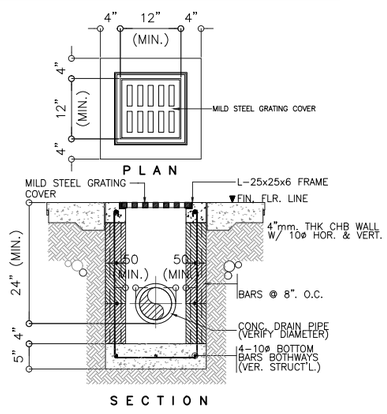

4 DETAIL OF AREA DRAIN
SCALE NTS.

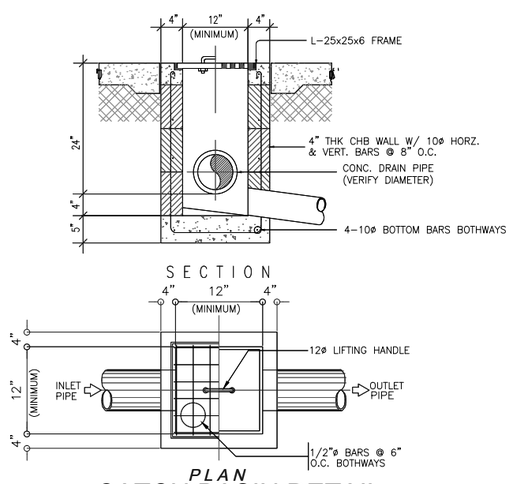

5 CATCH BASIN DETAIL
SCALE NTS.

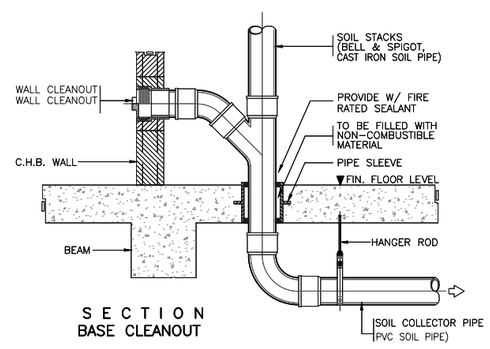

6 WALL CLEAN-OUT DETAIL
SCALE NTS.

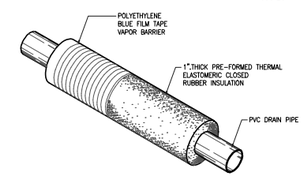

08 DETAIL OF A/C DRAIN PIPE PIPE INSULATION
SCALE NTS.

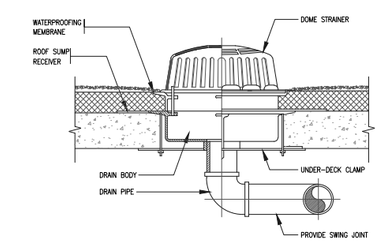

07 ROOF DECK DRAIN (DOME TYPE) DETAIL

ARCHITECTS
P.O. Box 6
Kolonia, POHNPEI
FSM 96941
Tel. (691) 320-2966
email add.:
archrsroque@yahoo.com

CONSULTANT

J.S.R PIPING DESIGN
ENGR: JOSELITO REYES

PROPOSED DECEM/NEOC BLDG EXPANSION & REFURBISHING (PALIKIR GOV.CAMPUS)

CONTENTS
- EXISTING SITE PLAN

Approved

Approved

REVISION	BY

DATE: JUNE, 2017
SCALE: AS SHOWN
DRAWN:
JOB:
SHEET
P-001

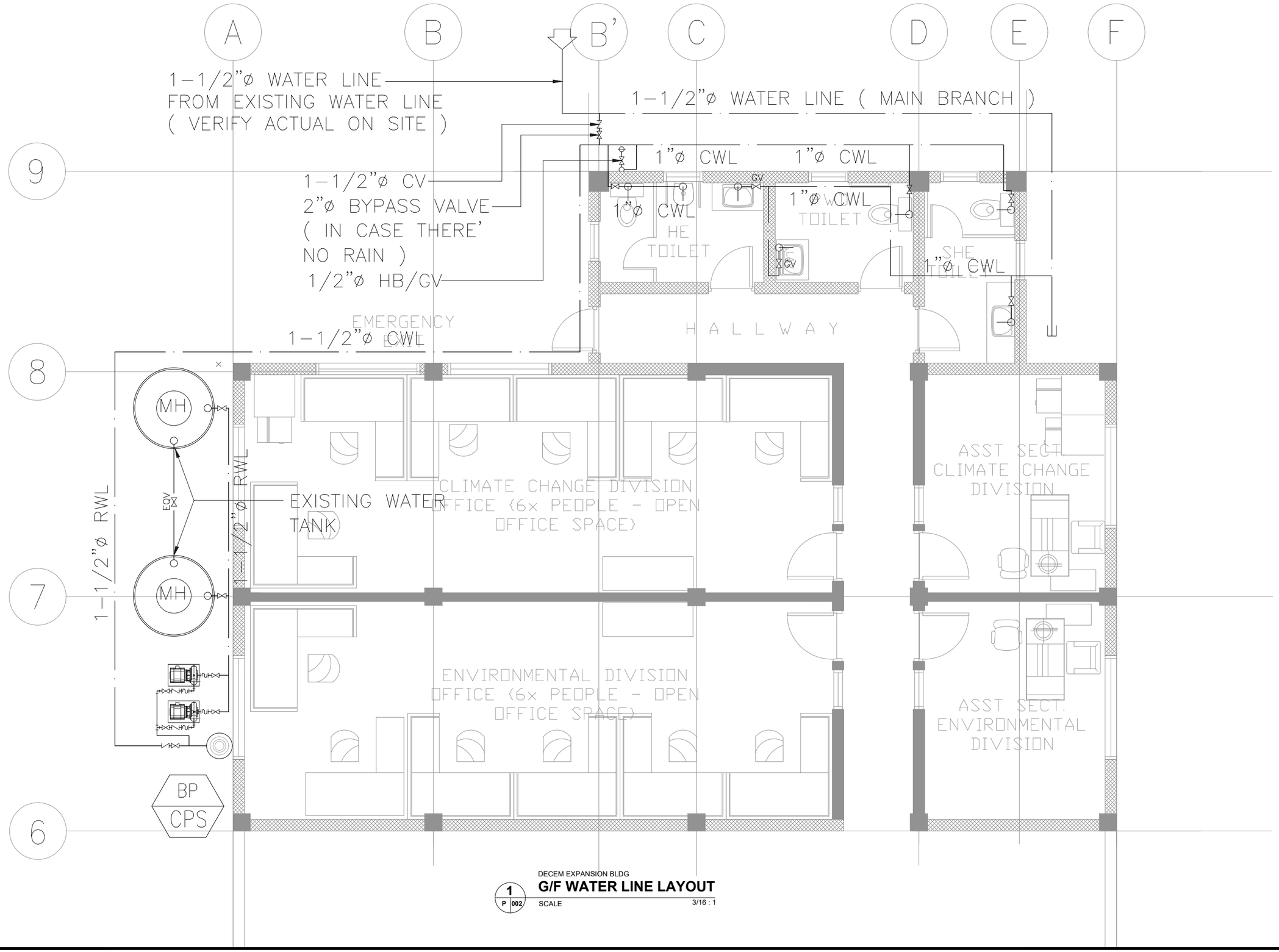

1
P 002

DECEM EXPANSION BLDG

G/F WATER LINE LAYOUT

SCALE 3/16 : 1

ARCHITECTS
P.O. Box 6
Kolonia, POHNPEI
FSM 96941
Tel. (691) 320-2966
email add.:
archsroque@yahoo.com

CONSULTANT

J.S.R PIPING DESIGN
ENGR: JOSELITO REYES

PROPOSED DECEM/NEOC BLDG EXPANSION & REFURBISHING (PALIKIR GOV.CAMPUS)

CONTENTS

- EXISTING SITE PLAN

Approved

Approved

REVISION	BY

DATE: JUNE, 2017

SCALE: AS SHOWN

DRAWN:

JOB:

SHEET

P-002

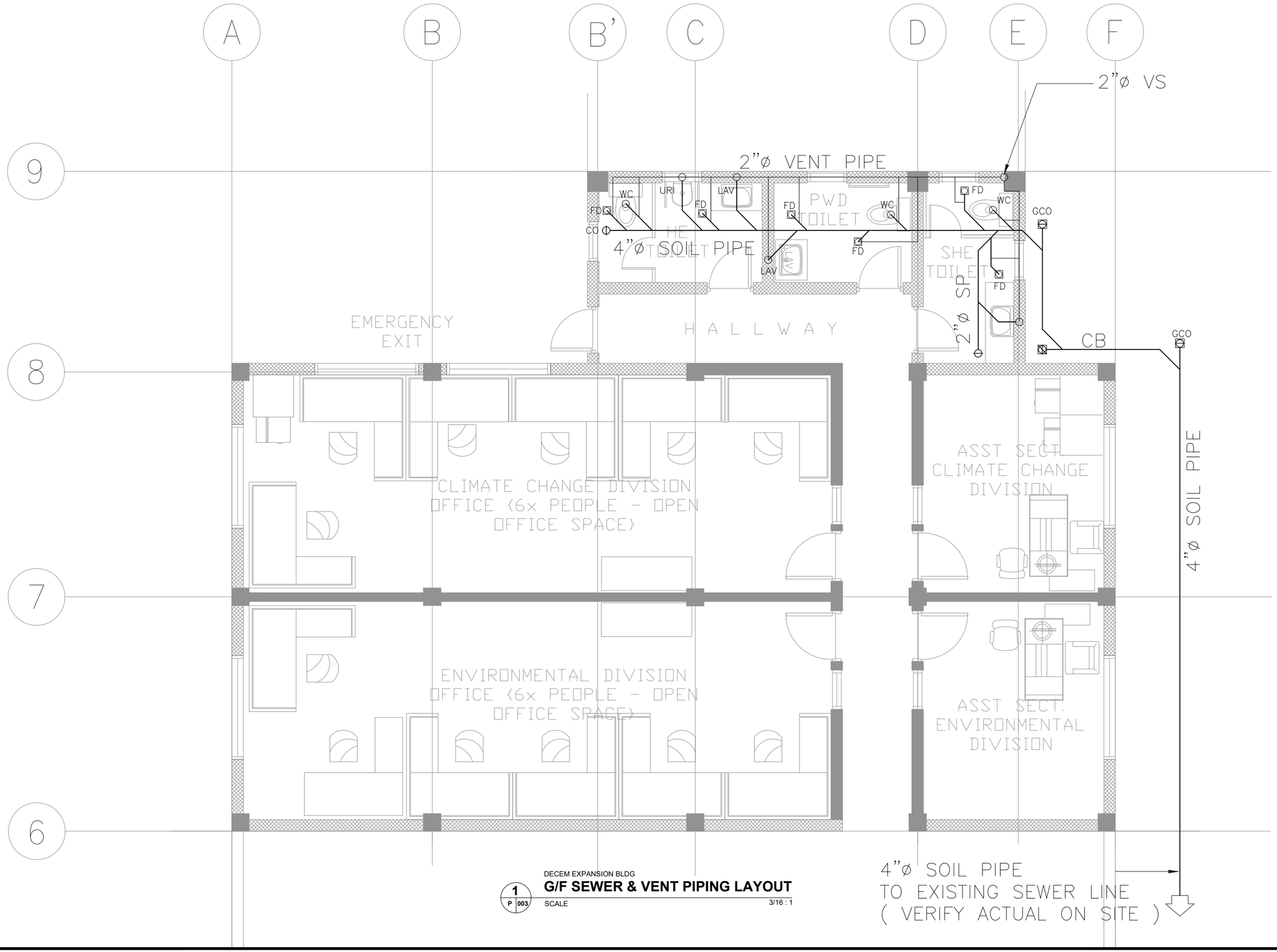

1 P 003

DECEM EXPANSION BLDG

G/F SEWER & VENT PIPING LAYOUT

SCALE 3/16 : 1

ARCHITECTS

P.O. Box 6
Kolonia, POHNPEI
FSM 96941
Tel. (691) 320-2966
email add.:
archsroque@yahoo.com

CONSULTANT

J.S.R PIPING DESIGN

ENGR: JOSELITO REYES

PROPOSED DECEM/NEOC BLDG EXPANSION & REFURBISHING (PALIKIR GOV.CAMPUS)

CONTENTS

- EXISTING SITE PLAN

Approved

Approved

REVISION	BY

DATE: JUNE, 2017

SCALE: AS SHOWN

DRAWN:

JOB:

SHEET

P-003

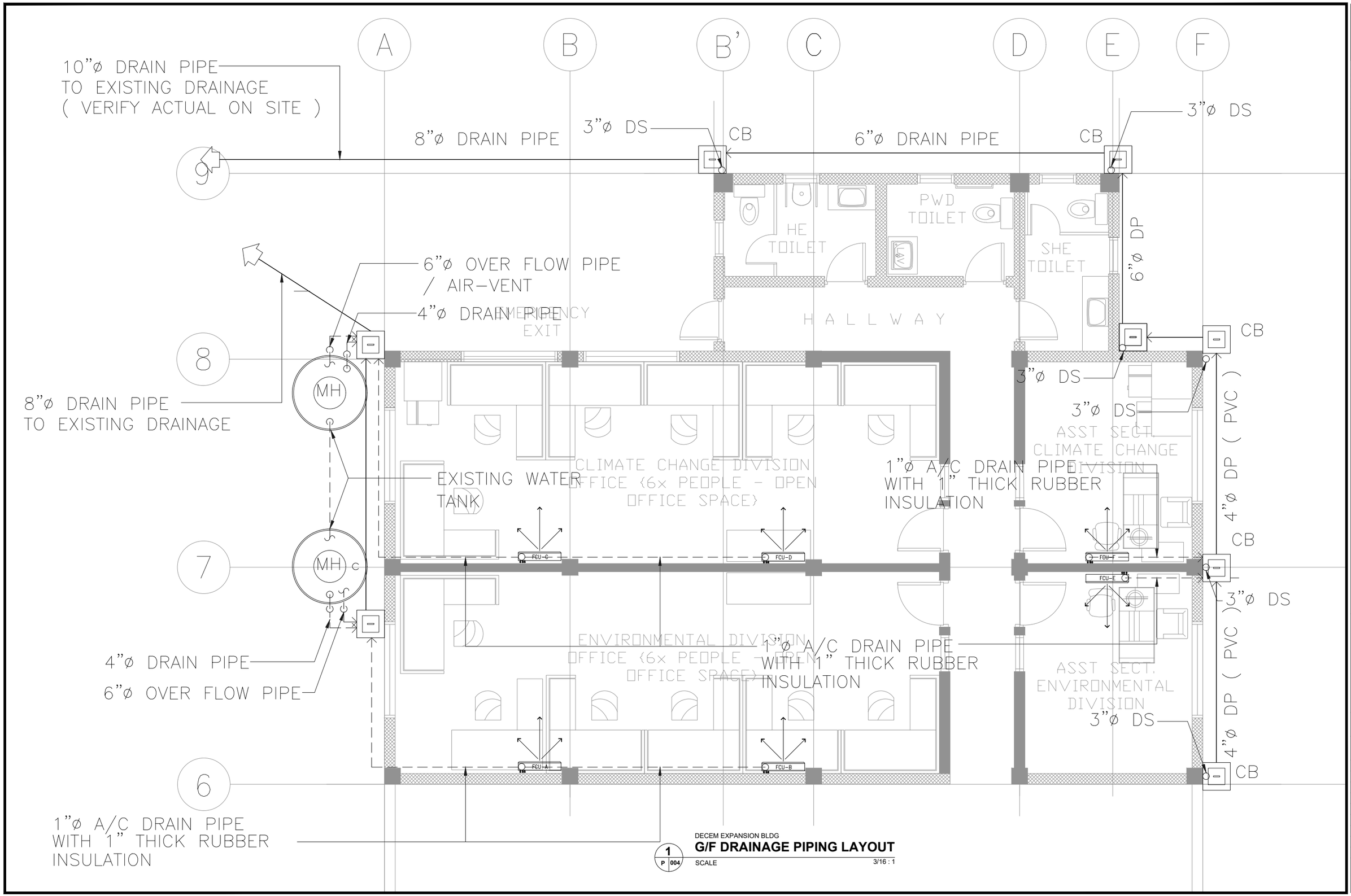

DECEM EXPANSION BLDG

G/F DRAINAGE PIPING LAYOUT

1 / P 004

SCALE 3/16 : 1

ARCHITECTS

P.O. Box 6
Kolonia, POHNPEI
FSM 96941
Tel. (691) 320-2966
email add.:
archsroque@yahoo.com

CONSULTANT

J.S.R PIPING DESIGN

ENGR: JOSELITO REYES

PROPOSED DECEM/NEOC BLDG EXPANSION & REFURBISHING (PALIKIR GOV.CAMPUS)

CONTENTS

- EXISTING SITE PLAN

Approved

Approved

REVISION	BY

DATE: JUNE, 2017

SCALE: AS SHOWN

DRAWN:

JOB:

SHEET

P-004

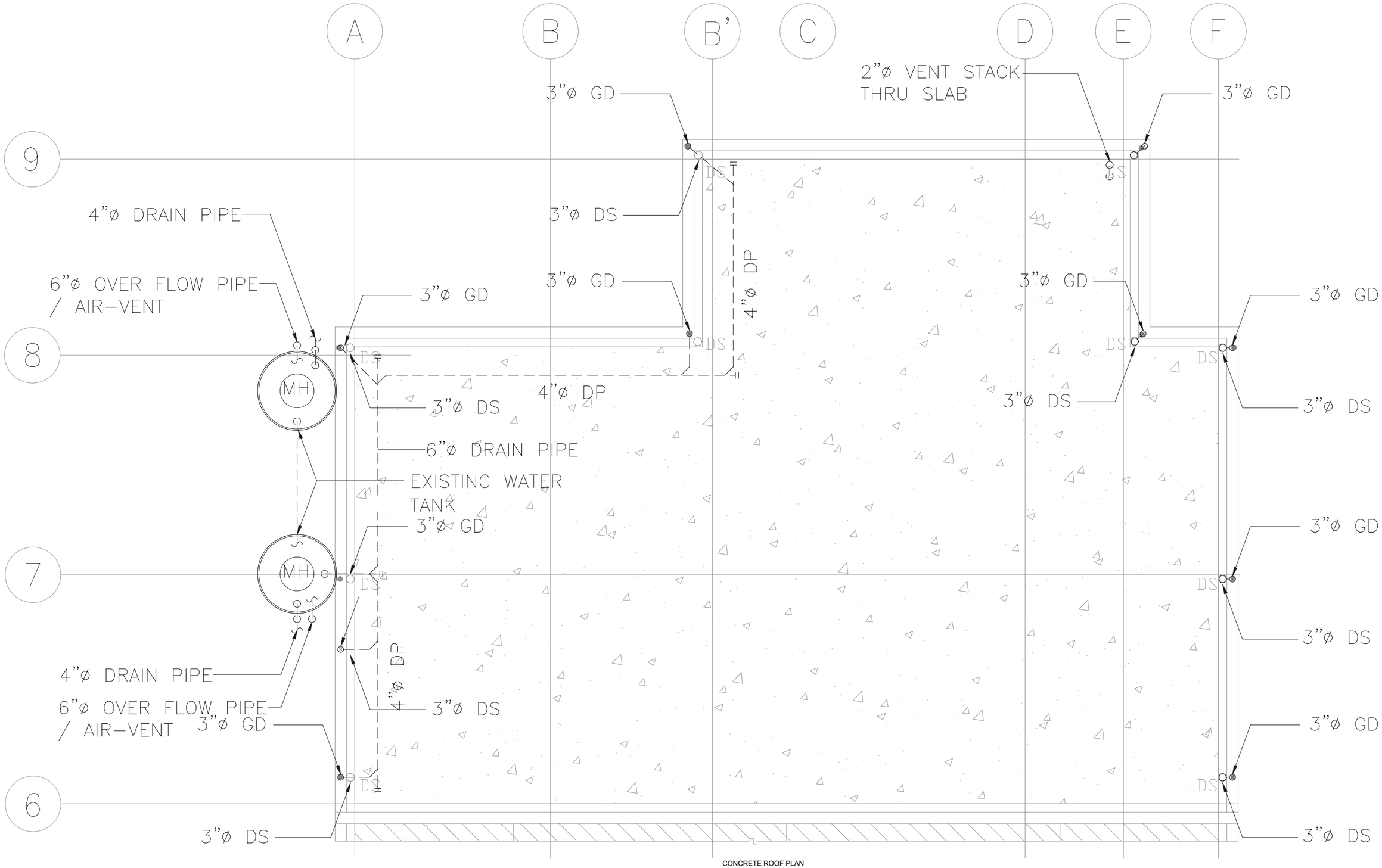

1
P 005

CONCRETE ROOF PLAN

DRAINAGE PIPING LAYOUT

SCALE 3/16 : 1

ARCHITECTS
P.O. Box 6
Kolonia, POHNPEI
FSM 96941
Tel. (691) 320-2966
email add.:
archsroque@yahoo.com

CONSULTANT

J.S.R PIPING DESIGN
ENGR: JOSELITO REYES

PROPOSED DECEM/NEOC BLDG EXPANSION & REFURBISHING (PALIKIR GOV.CAMPUS)

CONTENTS

- EXISTING SITE PLAN

Approved

Approved

REVISION	BY

DATE: JUNE, 2017

SCALE: AS SHOWN

DRAWN:

JOB:

SHEET

P-005

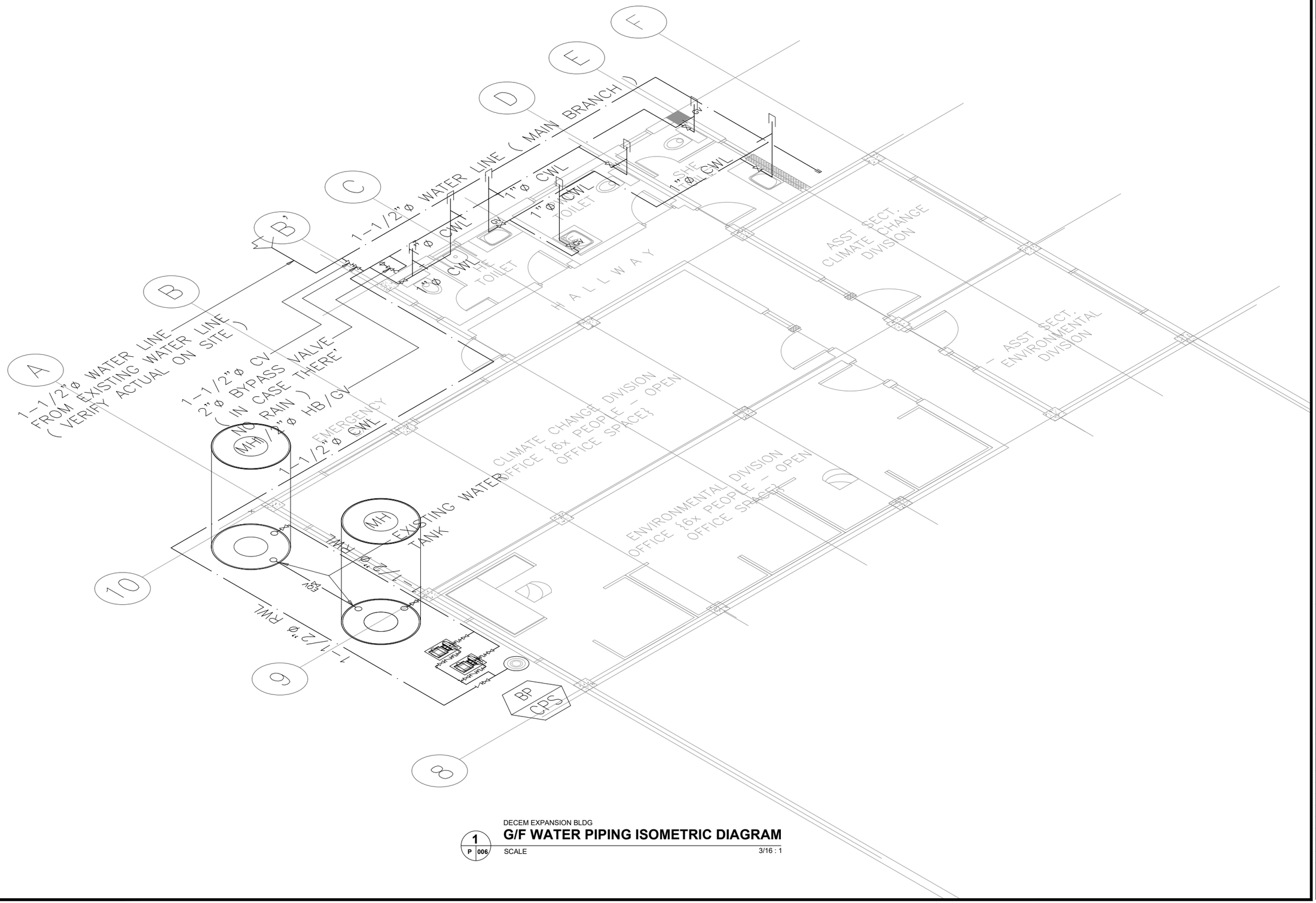
A
B
B'
C
D
E
F
10
6
8
1-1/2"ø WATER LINE
FROM EXISTING WATER LINE
(VERIFY ACTUAL ON SITE)
1-1/2"ø CV
2"ø BYPASS VALVE
(IN CASE THERE'
NO RAIN)
1-1/2"ø HB/GV
1-1/2"ø CWL
EMERGENCY
MH
EXISTING WATER
TANK
1-1/2"ø RWL
1-1/2"ø RWL
GV
1-1/2"ø WATER LINE (MAIN BRANCH)
1"ø CWL
1"ø CWL
1"ø CWL
1"ø CWL
1"ø CWL
GV
GV
GV

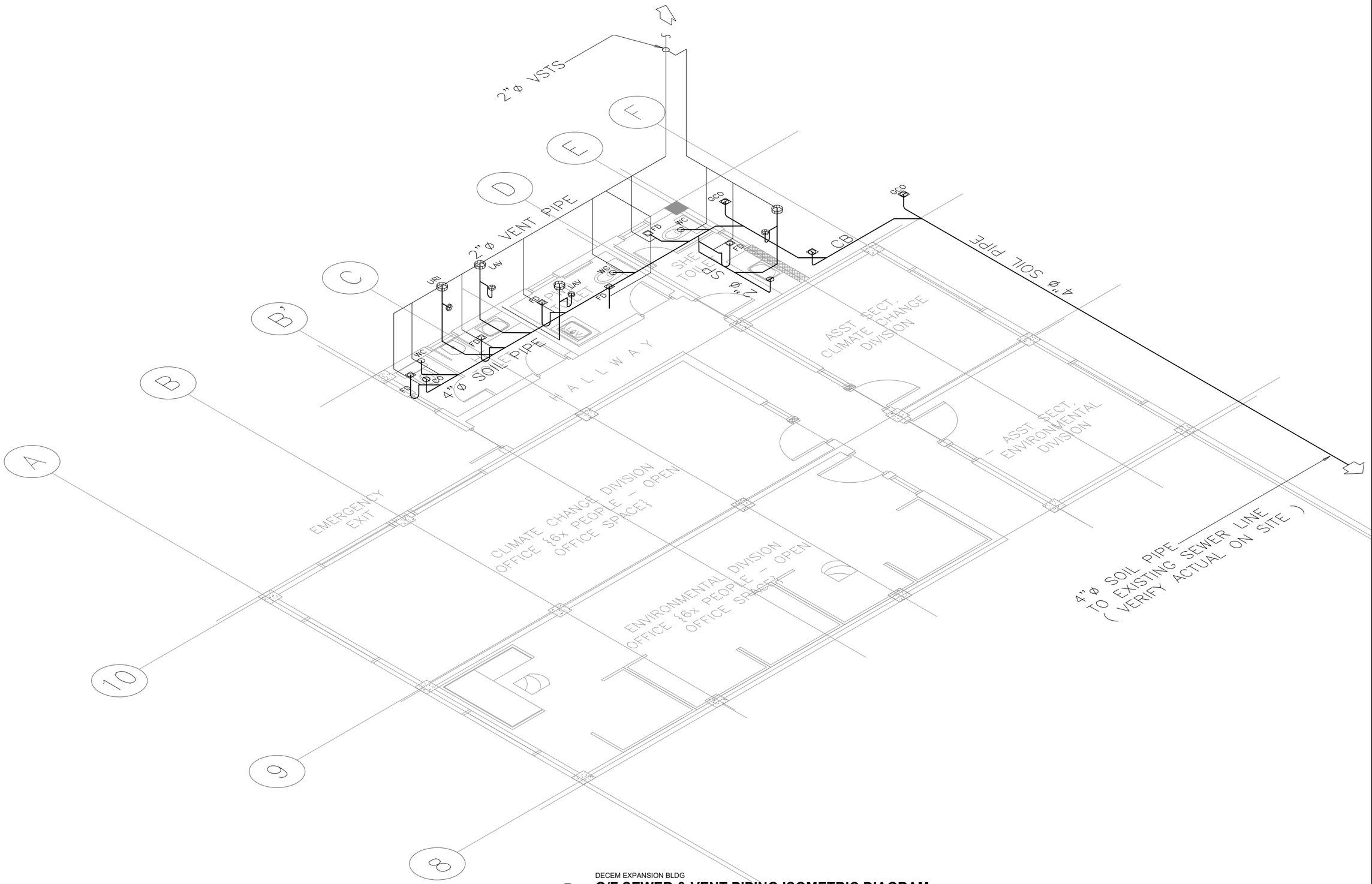

DECEM EXPANSION BLDG

1 P 007

G/F SEWER & VENT PIPING ISOMETRIC DIAGRAM

SCALE 3/16 : 1

ARCHITECTS
P.O. Box 6
Kolonia, POHNPEI
FSM 96941
Tel. (691) 320-2966
email add.:
archrsroque@yahoo.com

CONSULTANT

J.S.R PIPING DESIGN
ENGR: JOSELITO REYES

PROPOSED DECEM/NEOC BLDG EXPANSION & REFURBISHING (PALIKIR GOV.CAMPUS)

CONTENTS

- EXISTING SITE PLAN

Approved

Approved

REVISION	BY

DATE: JUNE, 2017

SCALE: AS SHOWN

DRAWN:

JOB:

SHEET

P-007

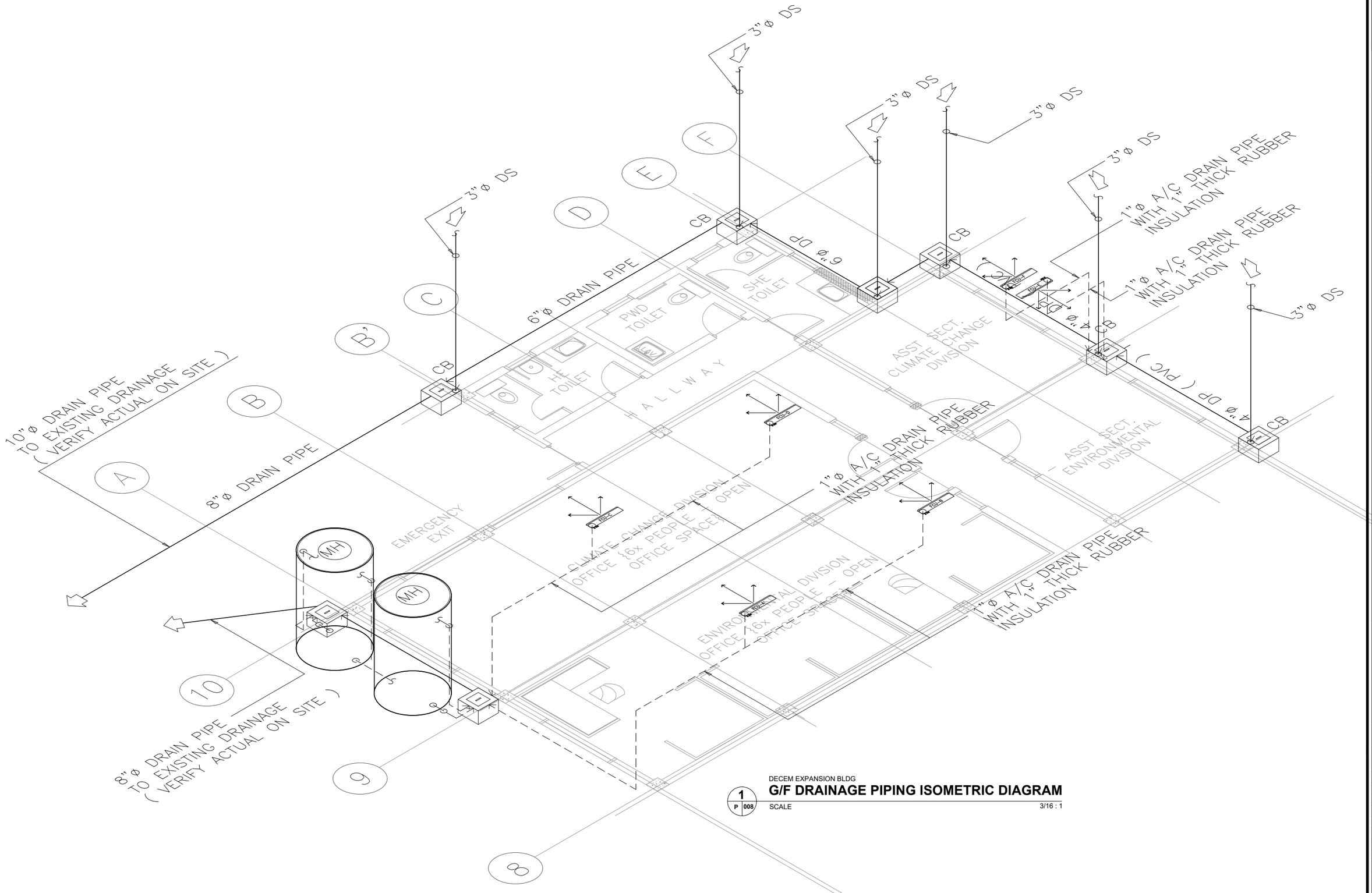

1
P 008

DECEM EXPANSION BLDG

G/F DRAINAGE PIPING ISOMETRIC DIAGRAM

SCALE 3/16 : 1

ARCHITECTS

P.O. Box 6
Kolonia, POHNPEI
FSM 96941
Tel. (691) 320-2966
email add.:
archsroque@yahoo.com

CONSULTANT

J.S.R PIPING DESIGN

ENGR: JOSELITO REYES

PROPOSED DECEM/NEOC BLDG EXPANSION & REFURBISHING (PALIKIR GOV.CAMPUS)

CONTENTS

- EXISTING SITE PLAN

Approved

Approved

REVISION	BY

DATE: JUNE, 2017

SCALE: AS SHOWN

DRAWN:

JOB:

SHEET

P-008

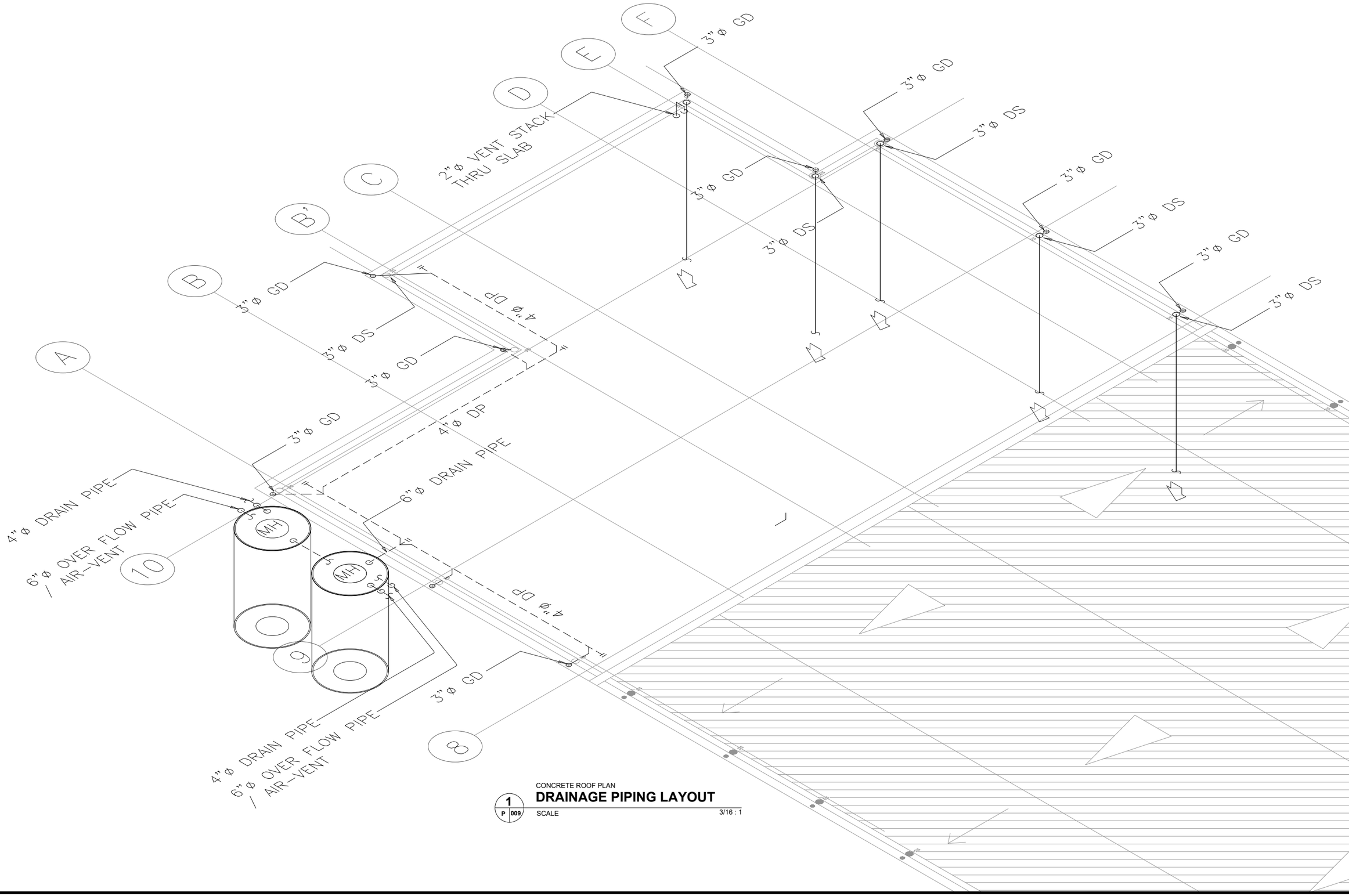

CONCRETE ROOF PLAN

1 / P 009

DRAINAGE PIPING LAYOUT

SCALE 3/16 : 1

ARCHITECTS

P.O. Box 6
Kolonia, POHNPEI
FSM 96941
Tel. (691) 320-2966
email add.:
archrsroque@yahoo.com

CONSULTANT

J.S.R PIPING DESIGN

ENGR: JOSELITO REYES

PROPOSED DECEM/NEOC BLDG EXPANSION & REFURBISHING (PALIKIR GOV.CAMPUS)

CONTENTS

- EXISTING SITE PLAN

Approved

Approved

REVISION	BY

DATE: JUNE, 2017

SCALE: AS SHOWN

DRAWN:

JOB:

SHEET

P-009

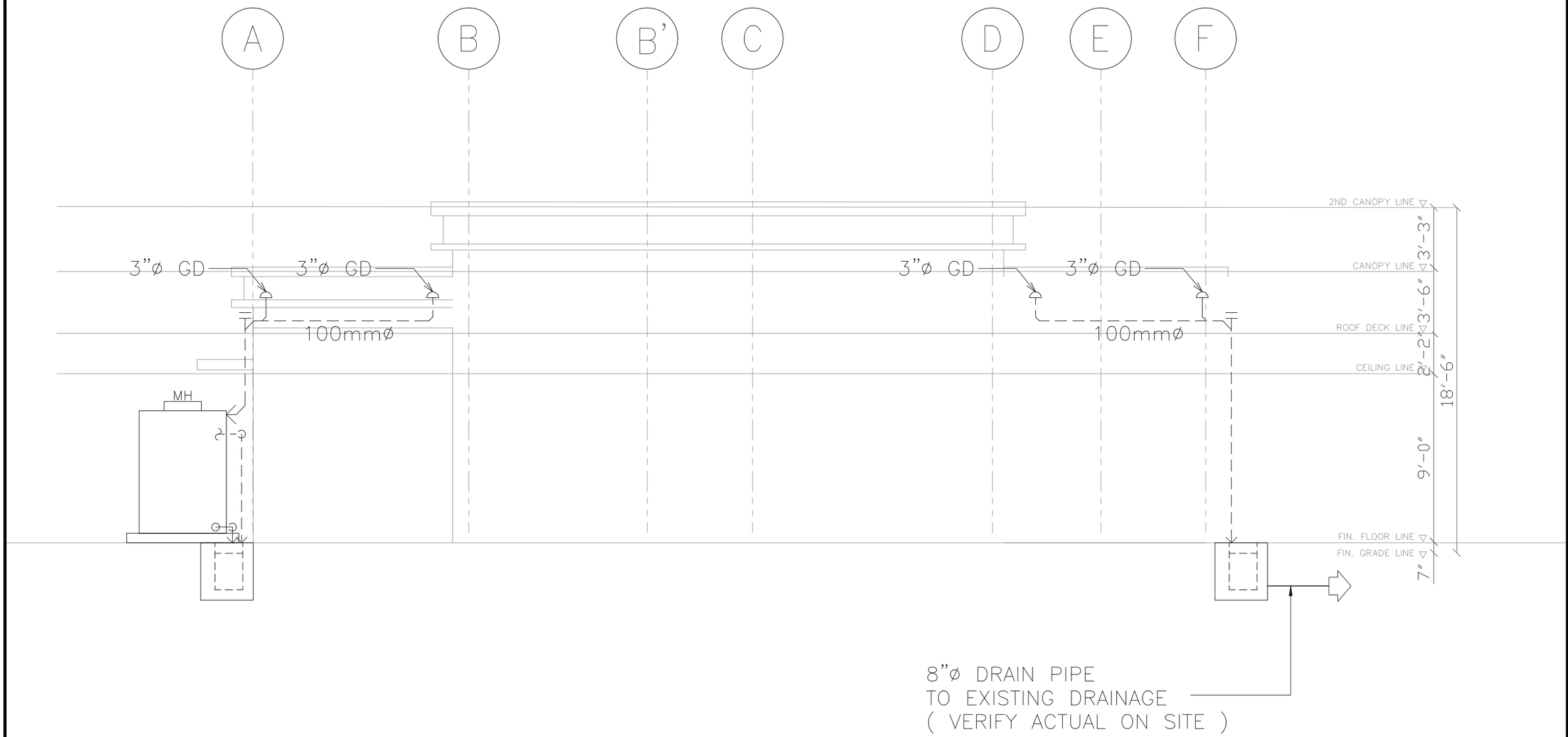

1 P 010 **DRAINAGE PIPING RISER DIAGRAM**

SCALE 3/16 : 1

ARCHITECTS
P.O. Box 6
Kolonia, POHNPEI
FSM 96941
Tel. (691) 320-2966
email add.:
archrsroque@yahoo.com

CONSULTANT

J.S.R PIPING DESIGN
ENGR: JOSELITO REYES

PROPOSED DECEM/NEOC BLDG EXPANSION & REFURBISHING (PALIKIR GOV.CAMPUS)

CONTENTS

- EXISTING SITE PLAN

Approved

Approved

REVISION	BY

DATE: JUNE, 2017

SCALE: AS SHOWN

DRAWN:

JOB:

SHEET

P-010

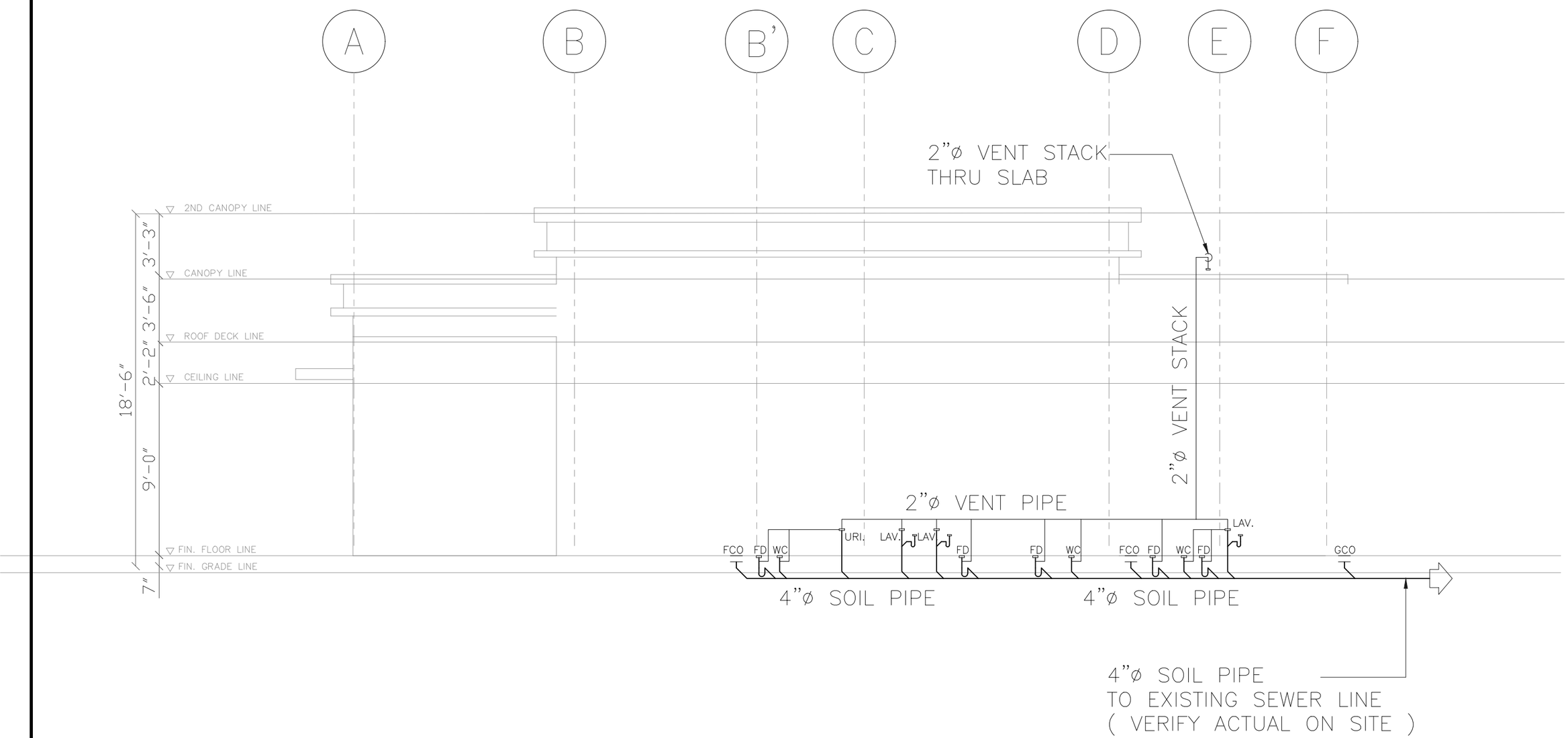

1
P 011

DECEM EXPANSION BLDG

SEWER AND PIPING RISER DIAGRAM

SCALE 3/16 : 1

ARCHITECTS

P.O. Box 6
Kolonia, POHNPEI
FSM 96941
Tel. (691) 320-2966
email add.:
archrsroque@yahoo.com

CONSULTANT

J.S.R PIPING DESIGN
ENGR: JOSELITO REYES

PROPOSED DECEM/NEOC BLDG EXPANSION & REFURBISHING (PALIKIR GOV.CAMPUS)

CONTENTS

- EXISTING SITE PLAN

Approved

Approved

REVISION	BY

DATE: JUNE, 2017

SCALE: AS SHOWN

DRAWN:

JOB:

SHEET

P-011

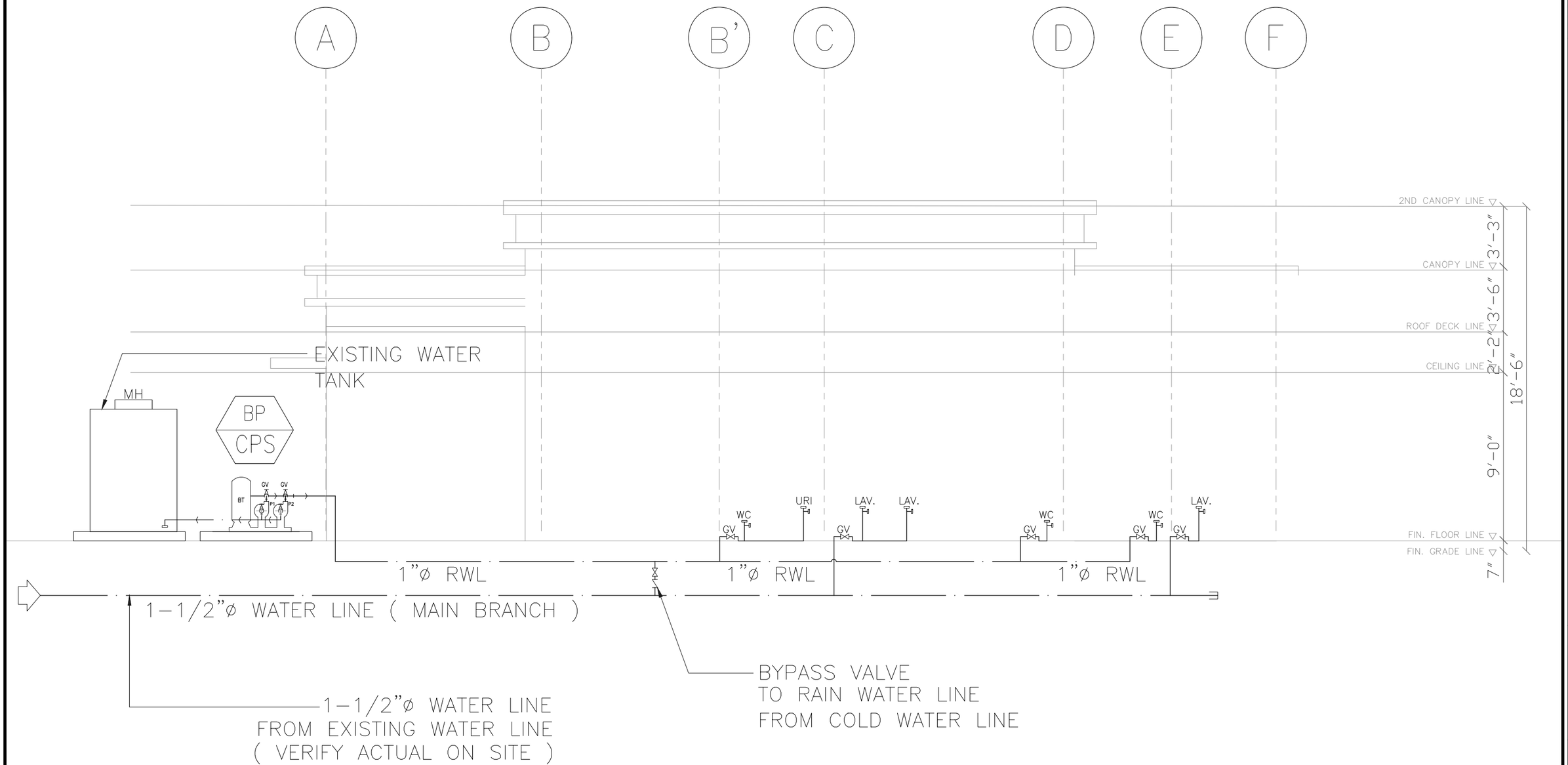

1
P 010

DECEM EXPANSION BLDG
PIPING RISER DIAGRAM
SCALE 3/16 : 1

ARCHITECTS

P.O. Box 6
Kolonia, POHNPEI
FSM 96941
Tel. (691) 320-2966
email add.:
archsroque@yahoo.com

CONSULTANT

J.S.R PIPING DESIGN
ENGR: JOSELITO REYES

PROPOSED DECEM/NEOC BLDG EXPANSION & REFURBISHING (PALIKIR GOV.CAMPUS)

CONTENTS

- EXISTING SITE PLAN

Approved

Approved

REVISION	BY

DATE: JUNE, 2017
SCALE: AS SHOWN
DRAWN:
JOB:
SHEET
P-012

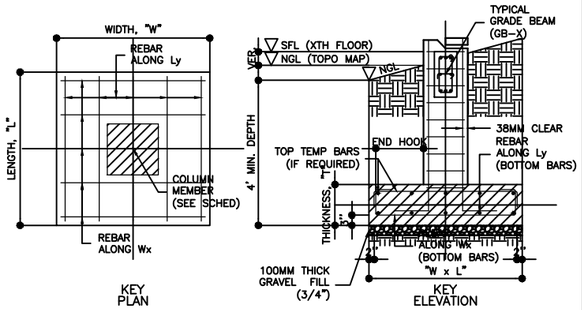

FOOTING MARK	ASBP (Psf)	FOOTING DIMENSIONS			REBARS ALONG		REMARKS
		L,in	W,in	T,in	Wx	Ly	
F1	2500	42	42	12	5-#5 BB	5-#5 BB	CENTRAL
F2	2500	42	42	12	4-#5 TB & BB	4-#5 TB & BB	CENTRAL
F3	2500	36	36	12	4-#5 BB	4-#5 BB	CENTRAL
F4	2500	46	46	12	5-#5 BB	5-#5 BB	CENTRAL
F5	2500	40	40	12	5-#5 BB	5-#5 BB	CENTRAL
F6	2500	50	50	12	6-#5 BB	6-#5 BB	CENTRAL
F7	2500	52	52	12	5-#5 TB & BB	5-#5 TB & BB	CANTILEVER
F8	2500	48	48	12	4-#5 TB & BB	4-#5 TB & BB	CANTILEVER

1 / S1.0 ISOLATED FOOTING
FOOTING DETAIL & SCHEDULE
SCALE NONE

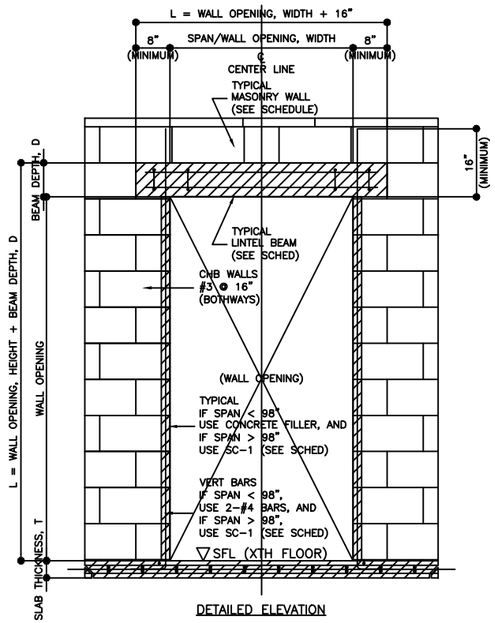

3 / S1.0 WHERE APPLICABLE
TYPICAL CHB WALL OPENING
SCALE NONE

NOTES ON PIPE SLEEVE (HORIZONTAL):

1. THAT PIPE SLEEVES SHALL BE LOCATED WITHIN THE PIPE EMBEDMENT ZONE.
2. THAT PIPE EMBEDMENT ZONE SHALL BE AS FOLLOWS:
   CONTINUOUS/SIMPLE BEAMS
   (1/4) * Lc FROM EACH SUPPORT FACE
   CANTILEVER BEAMS
   (3/4) * Lc FROM SUPPORT FACE
3. THAT PIPE SLEEVES SHALL BE ASTM A-36 STEEL OR APPROVED EQUIVALENT.

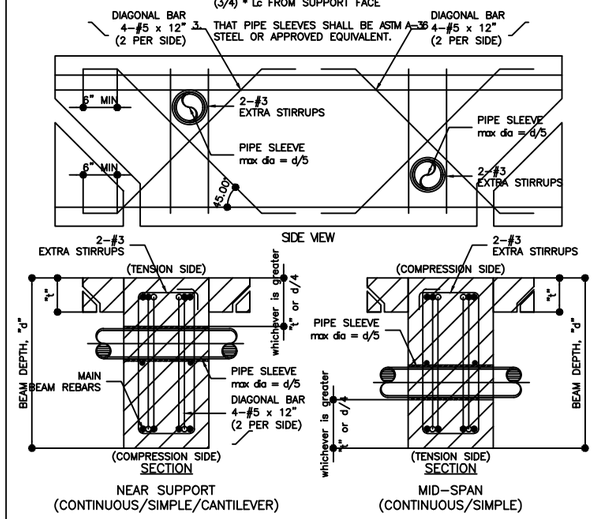

4 / S1.0 WHERE APPLICABLE
PIPE SLEEVE THRU RC BEAM DETAIL
SCALE NONE

CONSTRUCTION NOTES

A. WORKING DRAWINGS

1. THIS "STRUCTURAL CONSTRUCTION NOTES" SHALL FORM A PART OF THE STRUCTURAL WORKING DRAWINGS;
2. IN THE INTERPRETATION OF DRAWINGS, INDICATED DIMENSIONS SHALL GOVERN AND DISTANCES OR SIZES SHALL NOT BE SCALED FOR CONSTRUCTION PURPOSES;
3. IN CASES OF CONFLICT IN DETAIL OR DIMENSIONS BETWEEN THE ARCHITECTURAL AND STRUCTURAL DRAWINGS REFER TO THE STRUCTURAL ENGINEER AND THE ARCHITECT FOR FINAL DECISION;
4. IN CASES OF CONFLICT BETWEEN THE DRAWINGS, GENERAL NOTES AND SPECIFICATIONS, THE WORKING DRAWINGS SHALL GOVERN;
5. IN CASES OF CONFLICT BETWEEN THIS GENERAL NOTES FOR STRUCTURAL WORKS AND THE SPECIFICATION, THE GENERAL NOTES SHALL GOVERN.

B. CONCRETE MIXES

1. UNLESS OTHERWISE INDICATED IN PLANS OR NOTED IN THE SPECIFICATION, THE MINIMUM TEST CYLINDER COMPRESSIVE STRENGTH OF CONCRETE AT 28 DAYS SHALL BE AS FOLLOWS:

a. f'c = 2,500 PSI (17.24 MPA)
   LEAN CONCRETE, CURBS & GUTTERS
b. f'c = 3,000 PSI (20.69 MPA)
   SLABS (ON FILL/GRADE), STAIRS (ON FILL/GRADE) BEAMS (TIE, GRADE, LINTEL), COLUMNS (STIFFENER)
c. f'c = 3,000 PSI (20.69 MPA)
   FOOTINGS (COLUMN, RETAINING WALL, SHEAR WALL, CHB WALL), SLABS (SUSPENDED), STAIRS (SUSPENDED), BEAMS (SUSPENDED), COLUMNS, RC WALL, RETAINING WALL, SHEAR WALL

C. REINFORCING BARS

1. ALL MAIN REINFORCING BARS SHALL BE DEFORMED CONFORMING TO ASTM A615-68;
2. ALL REINFORCING BARS SHALL CONFORM TO ASTM A-615. UNLESS OTHERWISE INDICATED IN PLANS OR NOTED IN STRUCTURAL SPECIFICATION, THE MINIMUM YIELD STRENGTH OF REINFORCEMENTS TO BE USED CORRESPONDING TO THE STRUCTURAL MEMBER SHALL BE AS FOLLOWS:

a. STRUCTURAL GRADE DEFORMED BARS
   NOT APPLICABLE — fy = GRADE 33 (227.54 MPA)
b. INTERMEDIATE GRADE DEFORMED BARS
   #3, #4, #5 BARS AND ABOVE — fy = GRADE 40 (275.80 MPA)
c. HIGH GRADE DEFORMED BARS
   NOT APPLICABLE — fy = GRADE 60 (413.70 MPA)
3. LAP SPLICE, END HOOK AND ANCHORAGE LENGTHS FOR DEVELOPMENT LENGTH (LD) UNLESS OTHERWISE INDICATED IN THE PLANS SHALL BE AS PER TABLES.

D. FOOTINGS

1. FOUNDATION IS DESIGNED FOR AN ASSUMED ALLOWABLE SOIL BEARING CAPACITY OF 2,500 PSF (120.00 KPA). THIS ASSUMPTION SHALL BE VERIFIED AND CONFIRMED DURING SITE EXCAVATION.
2. FOUNDATION SHALL BE CARRIED TO DEPTH AS SPECIFIED IN THE PLANS AND SHALL REST ON NATURAL SOIL, UNLESS OTHERWISE NOTED BY THE STRUCTURAL ENGINEER, NO PART OF FOUNDATION SHALL REST ON FILL.
3. THE CONTRACTOR SHALL NOTIFY THE STRUCTURAL ENGINEER AFTER FOOTING EXCAVATION HAVE BEEN COMPLETED AND PRIOR TO CONCRETING TO CONFIRM THE DESIGN SOIL BEARING CAPACITY.

E. REINFORCED CONCRETE CONSTRUCTION

1. CEMENT SHALL CONFORM TO PORTLAND CEMENT ASTM C150;
2. CONCRETE AGGREGATES SHALL CONFORM TO ASTM C33 EXCEPT THAT AGGREGATES FAILING TO MEET THESE SPECIFICATIONS BUT WHICH HAVE PRODUCED CONCRETE OF ADEQUATE STRENGTH AND DURABILITY MAY BE USED SUBJECT TO THE APPROVAL OF THE STRUCTURAL ENGINEER;
3. REINFORCING BARS SHALL CONFORM TO ASTM A615-68.

F. CONCRETE HOLLOW BLOCKS WALLS

1. UNLESS OTHERWISE INDICATED IN THE PLANS, THE VERTICAL AND HORIZONTAL REINFORCEMENTS FOR CHB SHALL BE #3 @ 16" (10ø @ 400MM) ON CENTER. LAP SPLICES SHALL BE 12" (300MM) LONG (MINIMUM);
2. WHERE CHB WALLS ADJOIN R.C. COLUMNS AND BEAMS, PROVIDE DOWELS ON R.C. COLUMN AND BEAMS TO MATCH CHB WALL REINFORCEMENTS. THE DOWELS SHALL BE #3 @ 16" (10ø @ 400MM) ON CENTER;
3. WHERE COLUMNS AND BEAMS HAVE POURED WITHOUT THE CHB WALL DOWEL, PROVIDE EXPANSION BOLTS, #4 @ 16" (12ø @ 400MM) ON CENTER, THESE ANCHORS SHALL BE DRILLED AND HAMMERED IN PLACE. NO CHIPPING OF CONCRETE COLUMN AND BEAM IS ALLOWED UNLESS PERMITTED BY THE STRUCTURAL ENGINEER.
4. EXTERIOR AND INTERIOR MASONRY UNITS SHALL BE LOAD BEARING AND NON-LOAD BEARING UNITS WITH COMPRESSIVE STRENGTH OF 700 PSI (4.83 MPA) AND 400 PSI (2.76 MPA), RESPECTIVELY. HOWEVER, LOAD BEARING UNITS MAY BE PROVIDED IN LIEU OF NON-LOAD BEARING UNITS. SURFACES OF UNITS THAT ARE TO BE PLASTERED SHALL BE SUFFICIENTLY ROUGH TO PROVIDE A SUITABLE BOND.

G. STRUCTURAL STEEL

1. UNLESS OTHERWISE INDICATED IN THE PLANS, STRUCTURAL STEEL SHALL CONFORM TO ASTM A-36. CERTIFIED MILL TESTS SHALL BE SUBMITTED BY THE FABRICATOR TO THE STRUCTURAL ENGINEER;
2. THE STEEL FABRICATOR SHALL SUBMIT SHOP DETAILS AND ERECTION DRAWINGS FOR APPROVAL BY THE STRUCTURAL ENGINEER. THE DRAWINGS SHALL SHOW CONNECTION DETAIL AND METHOD OF ERECTION TO BE EMPLOYED. NO MATERIALS SHALL BE ORDERED NOR FABRICATION STARTED UNTIL SUCH DRAWINGS ARE APPROVED BY THE STRUCTURAL ENGINEER;
3. WELDING SHALL CONFORM TO AWS STANDARD. THE E-60 OR E-70 ELECTRODES SHALL BE USED UNLESS OTHERWISE SPECIFIED BY THE STRUCTURAL ENGINEER;
4. UNLESS OTHERWISE NOTED, BOLTS SHALL CONFORM TO ASTM A-325, ERECTION BOLT HOLES SHALL BE 0.12" (3MM) PLUS NOMINAL BOLT DIAMETER;
5. UNLESS OTHERWISE SPECIFIED IN THE PLANS, GUSSET PLATES AND STIFFENERS SHALL BE AT LEAST 0.24" (6MM) THICK. ALL CUTTING EDGES SHALL BE NEAT CUT;
6. ALL BASE PLATES AND BEARING PLATES SHALL HAVE A MINIMUM THICKNESS OF 0.48 (12MM).

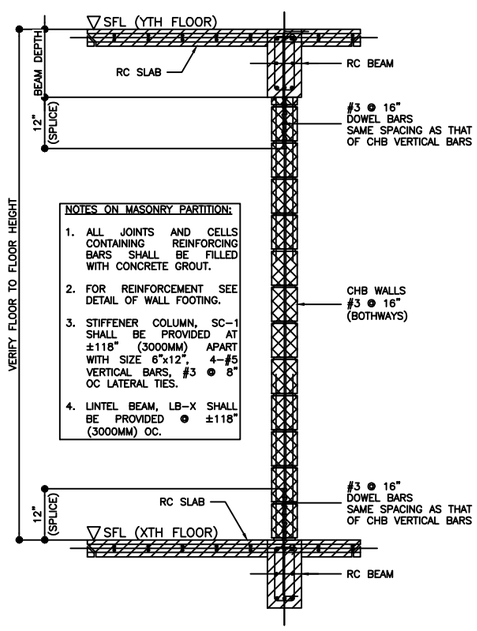

NOTES ON MASONRY PARTITION:

1. ALL JOINTS AND CELLS CONTAINING REINFORCING BARS SHALL BE FILLED WITH CONCRETE GROUT.
2. FOR REINFORCEMENT SEE DETAIL OF WALL FOOTING.
3. STIFFENER COLUMN, SC-1 SHALL BE PROVIDED AT ±118" (3000MM) APART WITH SIZE 6"x12", 4-#5 VERTICAL BARS, #3 @ 8" OC LATERAL TIES.
4. LINTEL BEAM, LB-X SHALL BE PROVIDED @ ±118" (3000MM) OC.

2 / S1.0 WHERE APPLICABLE
TYPICAL SECTION OF MASONRY CHB PARTITION REINFORCEMENTS
SCALE NONE

	C3 : Fy40 , COVER = 1.5"			C3 : Fy40 , COVER = 1.5"		
ROOF DECK TO GROUND FLOOR	ZONE 1	ZONE 2	ZONE 3	ZONE 1	ZONE 2	ZONE 3
	#3 @ 5"	#3 @ 5"	#3 @ 7"	#3 @ 5"	#3 @ 5"	#3 @ 6"
	14" 14" •#5			12" 12" •#5		
	8-#5			8-#5		
GROUND FLOOR TO FOOTING BASE	C3 : Fy40 , COVER = 1.5"			C3 : Fy40 , COVER = 1.5"		
	ZONE 1	ZONE 2	ZONE 3	ZONE 1	ZONE 2	ZONE 3
	#3 @ 5"	#3 @ 5"	#3 @ 4"	#3 @ 5"	#3 @ 5"	#3 @ 6"
	14" 14" •#5			12" 12" •#5		
	8-#5			8-#5		
RC COLUMN DESIGNATION	C1			C2		

5 / S1.0 RC COLUMN SCHEDULE
SCALE NONE

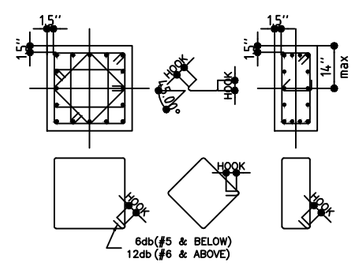

NOTES ON LATERAL TIES:

A. HOOKS

1. 6d = 2½" (#3)
2. 6d = 2 ¾" (#4)
3. 6d = 3 ¾" (#5)
4. 12d = 4 ¾" (#3)
5. 12d = 5 ¾" (#4)
6. 12d = 7½" (#5)

B. HEIGHT, "ZONE 1, ZONE 2"

WHICHEVER IS GREATER GOVERNS:
1. MAXIMUM COLUMN DIMENSION
2. 18" (450mm)
3. 1/6 x CLEAR HEIGHT BETWEEN FLOORS

6 / S1.0 WHERE APPLICABLE
LATERAL TIES DETAIL
SCALE NONE

ARCHITECTS
P.O. Box 6
Kolonia, POHNPEI
FSM 96941
Tel. (691) 320-2966
email add.:
archrsroque@yahoo.com
CONSULTANT

PROPOSED DECEM/NEOC BLDG EXPANSION & REFURBISHING (PALIKIR GOV.CAMPUS)

CONTENTS
- AS SHOWN

Approved

Approved

REVISION	BY

DATE: SEPTEMBER 2020
SCALE: AS SHOWN
DRAWN:
JOB:
SHEET
S-001

LEGENDS: RECT	ROUND	COLUMNS
▮	●	CONTINUOUS COLUMN
⊠	⊗	PLANTED COLUMN
▨	◍	TERMINATED COLUMN

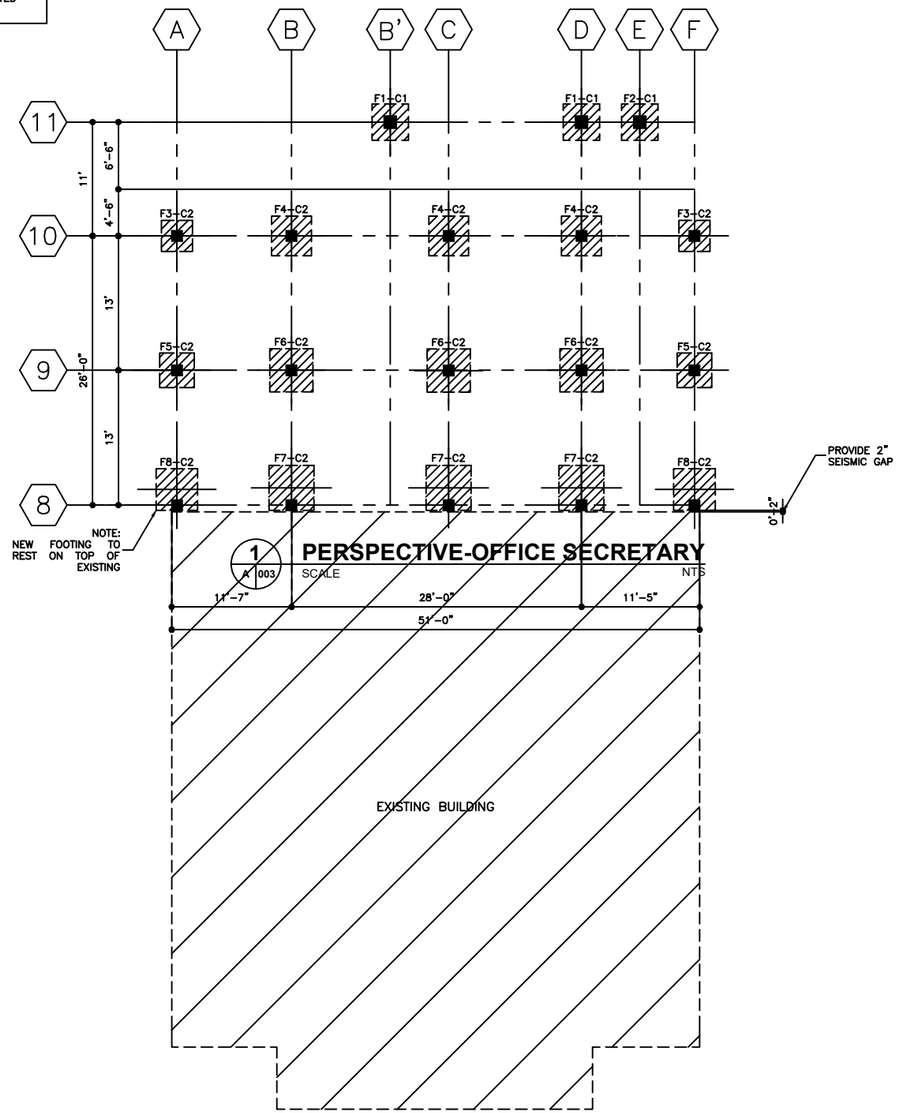

1 / A 003 **PERSPECTIVE-OFFICE SECRETARY**
SCALE NTS

1 / S 2.0 (ELEV.: −4'−0")
FOUNDATION PLAN
SCALE 1'=⅛"

THE CONTRACTOR SHALL WORK FROM FIGURED DIMENSIONS ONLY, AND SHALL VERIFY THESE ON SITE. ANY DISCREPANCIES MUST BE REPORTED IMMEDIATELY TO THE ARCHITECT OR ENGINEER BEFORE PROCEEDING ON RELEVANT WORK.

NOTES ON EXCAVATION:

1. THE EXCAVATION CONTRACTOR SHALL PROVIDE ADEQUATE SOIL PROTECTION TO EXCAVATION PITS AND ADJACENT PROPERTIES BY EMPLOYING A SUITABLE METHOD/TECHNIQUE USING SHOTCRETE WITH SOIL NAILS OR SHEET PILING.
2. THE EXCAVATION CONTRACTOR SHALL PROVIDE ADEQUATE DEWATERING TECHNIQUES ESPECIALLY DURING OCCURENCE OF HEAVY AND SUSTAINED RAINFALL.

LEGENDS:	WALLS
▨	CHB WALL (4" THICK)
═	CHB WALL (8" THICK)

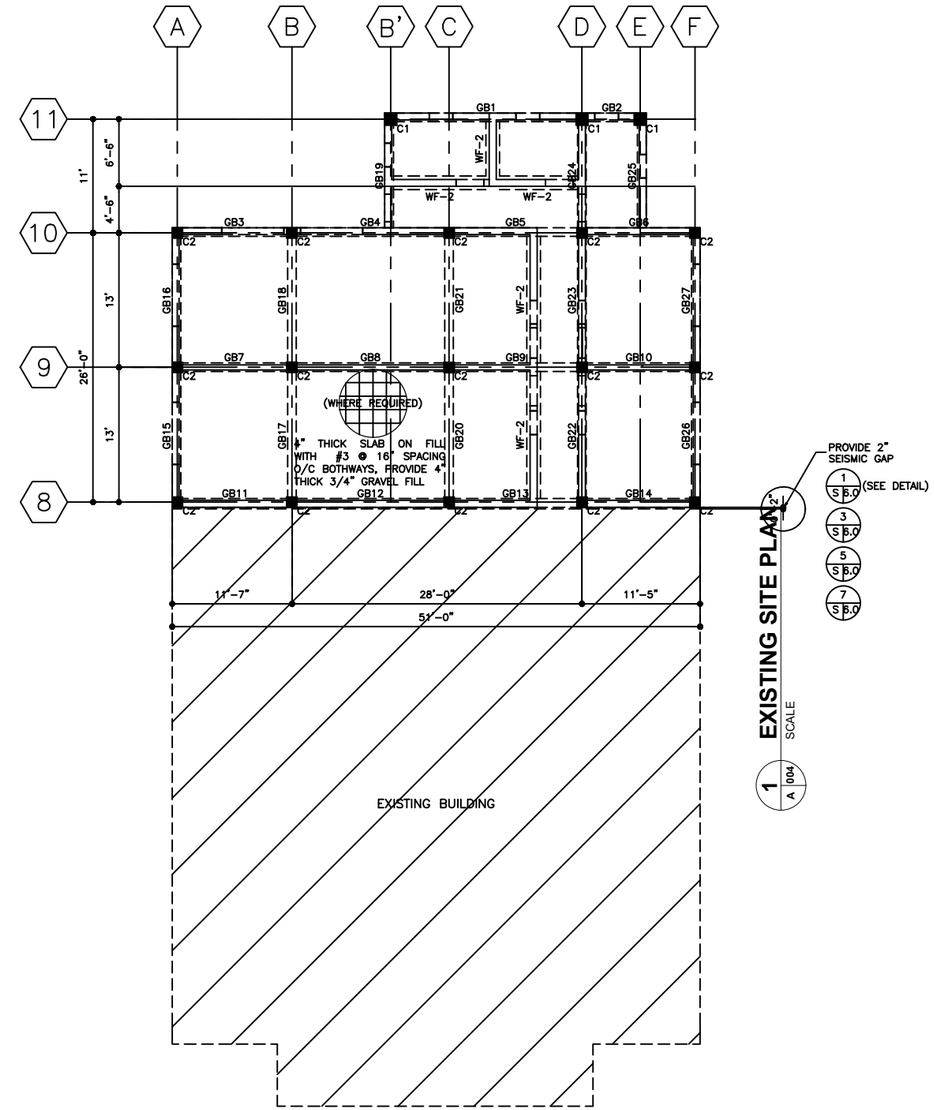

1 / A 004 **EXISTING SITE PLAN**
SCALE

2 / S 2.0 (ELEV.: +0'−7")
GROUND FLOOR FRAMING PLAN
SCALE 1'=⅛"

NOTES ON SLAB-ON-FILL

1. THAT STIFFENER COLUMNS (SC−1) SHALL BE PROVIDED FOR CHB WALLS SPACED @ ±118" (±3000mm) ON CENTER WITH A SIZE OF 6"x12", 4−#5 VERTICAL BARS, #3 @ 8" ON CENTER STIRRUPS.
2. THAT 8 MILLS POLYETHYLENE SHEET VAPOR BARRIER SHALL BE PROVIDED FOR ALL SLAB ON FILL LOCATED INSIDE OF THE BUILDING.
3. THAT 1" THICK CLEAN SAND ON TOP OF GRAVEL FILL MATERIAL SHALL BE PROVIDED PRIOR TO INSTALLATION OF VAPOR BARRIER.

NOTES ON FLOOR FRAMING PLAN

1. THAT STIFFENER COLUMNS (SC−1) SHALL BE PROVIDED FOR CHB WALLS SPACED @ ±118" (±3000mm) ON CENTER WITH A SIZE OF 6"x12", 4−#5 VERTICAL BARS, #3 @ 8" ON CENTER STIRRUPS.
2. THAT FORMS OF CANTILEVER BEAMS AND SLABS SHALL BE PROVIDED WITH A POSITIVE CAMBER AT FREE END WITH ½"/METER OF SPAN.
3. THAT FORMS OF BEAMS AND SLABS SUPPORTED AT BOTH ENDS SHALL BE PROVIDED WITH A POSITIVE CAMBER AT MID−SPAN WITH ⅛"/METER OF SPAN.

ARCHITECTS
P.O. Box 6
Kolonia, POHNPEI
FSM 96941
Tel. (691) 320-2966
email add.: archrsroque@yahoo.com

CONSULTANT

PROPOSED DECEM/NEOC BLDG EXPANSION & REFURBISHING (PALIKIR GOV.CAMPUS)

CONTENTS
- AS SHOWN
INTERIOR PERSPECTIVE
CONTENTS

Approved

Approved

REVISION	BY

DATE: SEPTEMBER 2020
SCALE: AS SHOWN
DRAWN:
JOB:
SHEET
S-002

LEGENDS: RECT	ROUND	COLUMNS
▮	●	CONTINUOUS COLUMN
⊠	⊗	PLANTED COLUMN
▨	◍	TERMINATED COLUMN

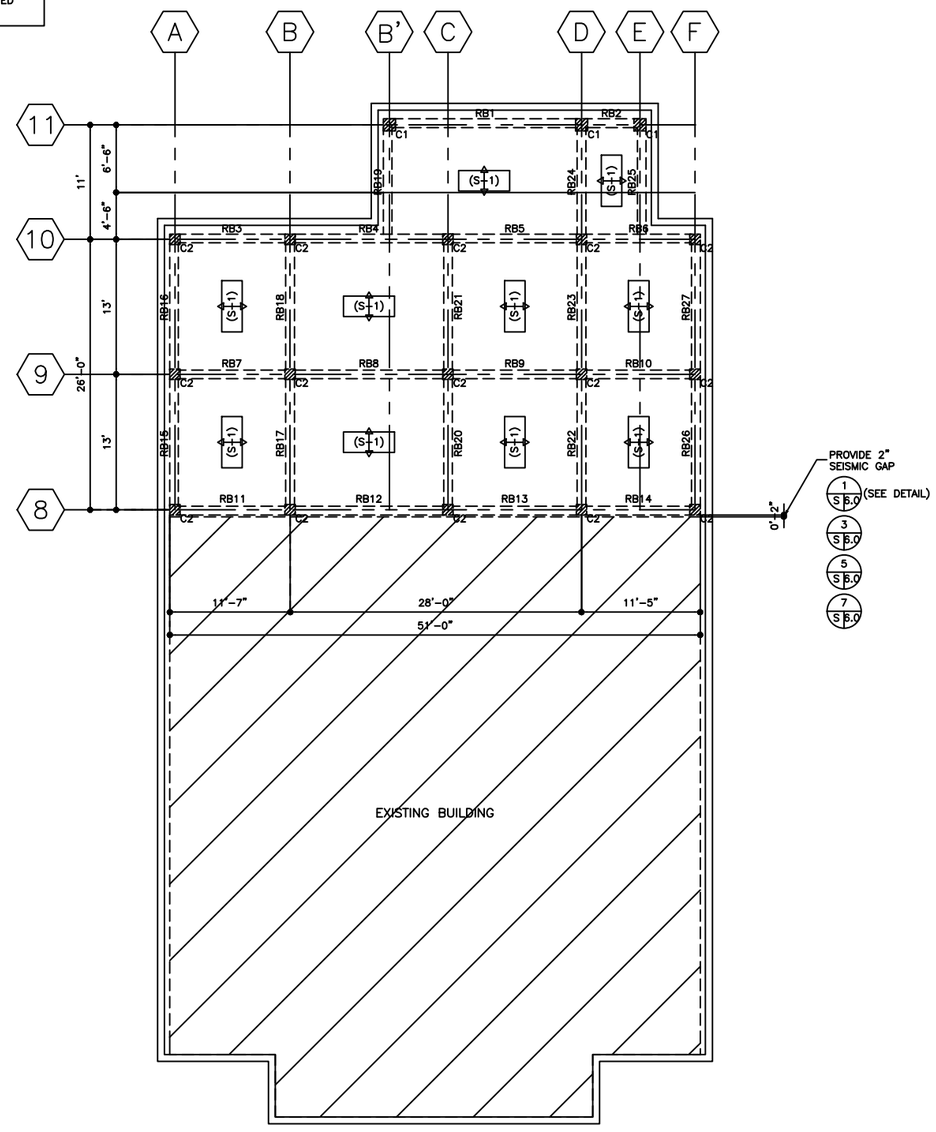

1 S 3.0 (ELEV.: +11'-9¼'')
ROOF DECK FRAMING PLAN
SCALE 1'=⅛"

THE CONTRACTOR SHALL WORK FROM FIGURED DIMENSIONS ONLY, AND SHALL VERIFY THESE ON SITE. ANY DISCREPANCIES MUST BE REPORTED IMMEDIATELY TO THE ARCHITECT OR ENGINEER BEFORE PROCEEDING ON RELEVANT WORK.

NOTES ON FLOOR FRAMING PLAN

1. THAT STIFFENER COLUMNS (SC-1) SHALL BE PROVIDED FOR CHB WALLS SPACED @ ±118" (±3000mm) ON CENTER WITH A SIZE OF 6"x12", 4-#5 VERTICAL BARS, #3 @ 8" ON CENTER STIRRUPS.
2. THAT FORMS OF CANTILEVER BEAMS AND SLABS SHALL BE PROVIDED WITH A POSITIVE CAMBER AT FREE END WITH ½"/METER OF SPAN.
3. THAT FORMS OF BEAMS AND SLABS SUPPORTED AT BOTH ENDS SHALL BE PROVIDED WITH A POSITIVE CAMBER AT MID-SPAN WITH ⅛"/METER OF SPAN.

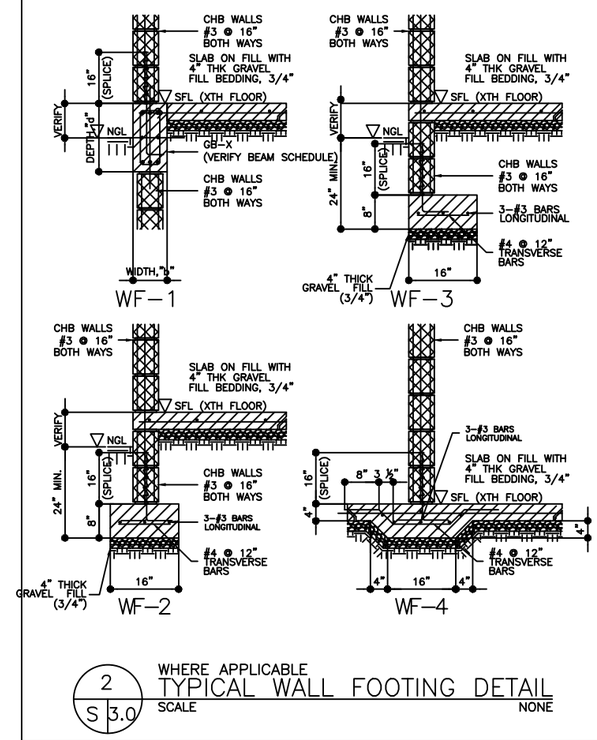

2 S 3.0 WHERE APPLICABLE
TYPICAL WALL FOOTING DETAIL
SCALE NONE

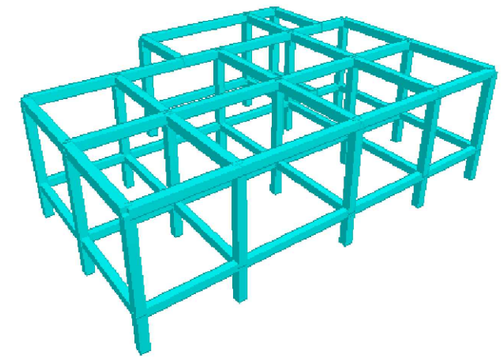

4 S 3.0 FRONT
STRUCTURAL PERSPECTIVE
SCALE NONE

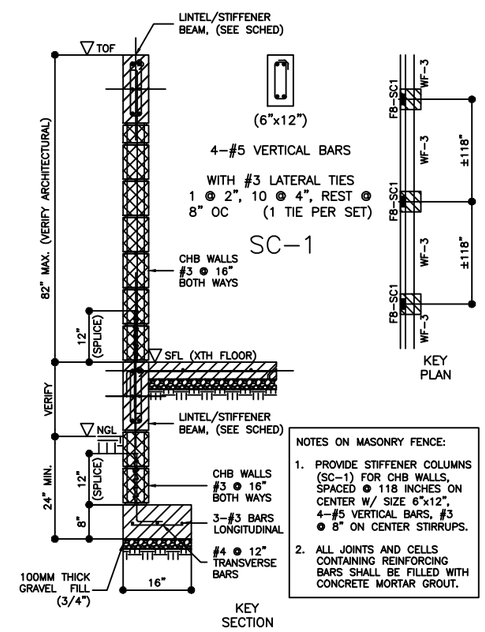

NOTES ON MASONRY FENCE:

1. PROVIDE STIFFENER COLUMNS (SC-1) FOR CHB WALLS, SPACED @ 118 INCHES ON CENTER W/ SIZE 6"x12", 4-#5 VERTICAL BARS, #3 @ 8" ON CENTER STIRRUPS.
2. ALL JOINTS AND CELLS CONTAINING REINFORCING BARS SHALL BE FILLED WITH CONCRETE MORTAR GROUT.

3 S 3.0 WHERE APPLICABLE
TYPICAL CHB FENCE DETAIL
SCALE NONE

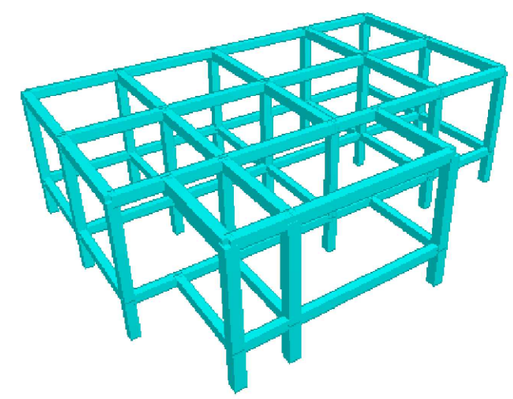

5 S 3.0 REAR
STRUCTURAL PERSPECTIVE
SCALE NONE

ARCHITECTS
P.O. Box 6
Kolonia, POHNPEI
FSM 96941
Tel. (691) 320-2966
email add.:
archrsroque@yahoo.com

CONSULTANT

PROPOSED DECEM/NEOC BLDG EXPANSION & REFURBISHING (PALIKIR GOV.CAMPUS)

CONTENTS
- AS SHOWN

Approved

Approved

REVISION	BY

DATE: SEPTEMBER 2020
SCALE: AS SHOWN
DRAWN:
JOB:
SHEET
S-003

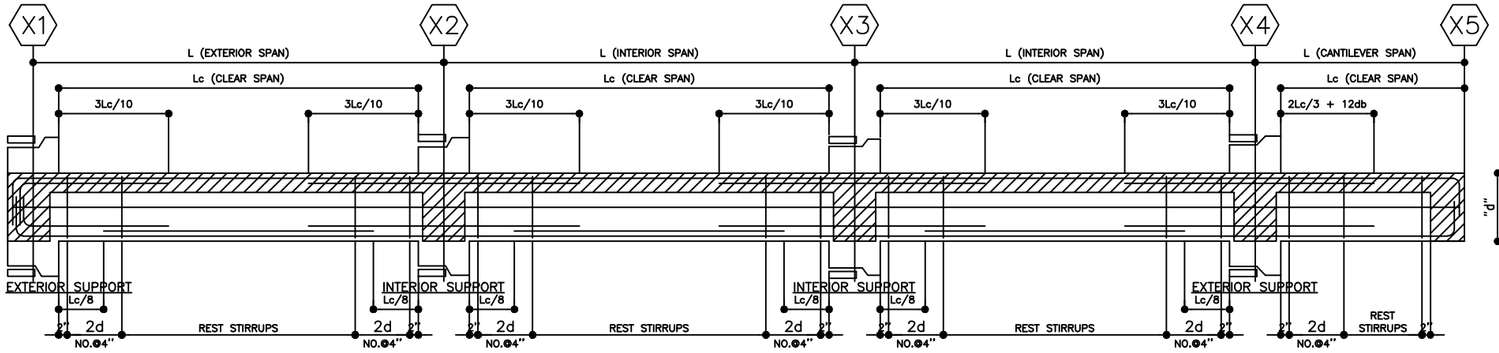

1 S 4.0 TYPICAL REINFORCED CONCRETE BEAM ELEVATION
SCALE NONE

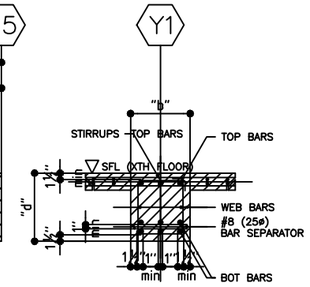

KEY SECTION

3 S 4.0 WHERE APPLICABLE BEAM SECTION
SCALE NONE

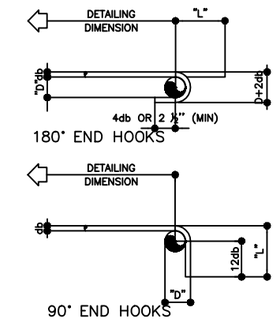

5 S 4.0 ALL GRADE MAIN REBARS END HOOK
SCALE NONE

GROUND FLOOR BEAMS

BEAM NUMBERS	SIZE		BOTTOM REINFORCEMENT			TOP REINFORCEMENT			SHEAR STIRRUPS			SFR	DIAGONAL	REMARKS
	B	D	LEFT	MID SPAN	RIGHT	LEFT	MID SPAN	RIGHT	LEFT	MID SPAN	RIGHT			
GB1	10"	14"	3-#5	3-#5	3-#5	3-#5 +2-#5	3-#5	3-#5 +2-#5	19-2L-#3@4" C/C	17-2L-#3@4" C/C	19-2L-#3@4" C/C	-	-	-
GB2	10"	14"	3-#5 +2-#5	3-#5 +2-#5	3-#5 +2-#5	3-#5 +2-#5	3-#5	3-#5 +2-#5	6-2L-#3@4" C/C	4-2L-#3@4" C/C	6-2L-#3@4" C/C	-	-	-
GB3,GB5,GB6	10"	12"	2-#5	2-#5	2-#5	3-#5	3-#5	3-#5	13-2L-#3@4" C/C	11-2L-#3@4" C/C	13-2L-#3@4" C/C	-	-	-
GB4	10"	12"	2-#5	2-#5	2-#5	3-#5	3-#5	3-#5	16-2L-#3@4" C/C	14-2L-#3@4" C/C	16-2L-#3@4" C/C	-	-	-
GB7,GB10	10"	10"	3-#5	3-#5	3-#5	3-#5	2-#5	3-#5	15-2L-#3@3" C/C	13-2L-#3@3" C/C	15-2L-#3@3" C/C	-	-	-
GB8	10"	10"	2-#5	2-#5	2-#5	3-#5	2-#5	3-#5	20-2L-#3@3" C/C	18-2L-#3@3" C/C	20-2L-#3@3" C/C	-	-	-
GB9	10"	10"	2-#5	2-#5	2-#5	3-#5	2-#5	3-#5	17-2L-#3@3" C/C	15-2L-#3@3" C/C	17-2L-#3@3" C/C	-	-	-
GB11,GB19,GB25	10"	12"	2-#5	2-#5	2-#5	2-#5	2-#5	2-#5	12-2L-#3@4" C/C	10-2L-#3@4" C/C	12-2L-#3@4" C/C	-	-	-
GB12	10"	12"	2-#5	2-#5	2-#5	2-#5	2-#5	2-#5	16-2L-#3@4" C/C	14-2L-#3@4" C/C	16-2L-#3@4" C/C	-	-	-
GB13	10"	12"	2-#5	2-#5	2-#5	2-#5	2-#5	2-#5	13-2L-#3@4" C/C	11-2L-#3@4" C/C	13-2L-#3@4" C/C	-	-	-
GB14	10"	12"	2-#5	2-#5	2-#5	2-#5	2-#5	2-#5	11-2L-#3@4" C/C	9-2L-#3@4" C/C	11-2L-#3@4" C/C	-	-	-
GB15,GB16,GB17 ,GB18,GB20,GB21 ,GB22,GB23,GB26 ,GB27	10"	12"	2-#5	2-#5	2-#5	3-#5	2-#5	3-#5	14-2L-#3@4" C/C	12-2L-#3@4" C/C	14-2L-#3@4" C/C	-	-	-
GB24	10"	12"	3-#5	3-#5	3-#5	3-#5	2-#5	3-#5	11-2L-#3@4" C/C	9-2L-#3@4" C/C	11-2L-#3@4" C/C	-	-	-
ROOF BEAMS														
RB1	10"	14"	3-#5	3-#5 +2-#5	3-#5	3-#5 +3-#5	3-#5	3-#5 +3-#5	19-2L-#3@4" C/C	17-2L-#3@4" C/C	19-2L-#3@4" C/C	1-#5EF	-	-
RB2	10"	14"	3-#5	3-#5	3-#5	3-#5 +3-#5	3-#5	3-#5 +3-#5	6-2L-#3@4" C/C	4-2L-#3@4" C/C	6-2L-#3@4" C/C	1-#5EF	-	-
RB3,RB5,RB6	10"	14"	3-#5	3-#5	3-#5	3-#5 +3-#5	3-#5	3-#5 +3-#5	12-2L-#3@4" C/C	10-2L-#3@4" C/C	12-2L-#3@4" C/C	1-#5EF	-	-
RB4	10"	14"	3-#5	3-#5	3-#5	3-#5 +3-#5	3-#5	3-#5 +3-#5	16-2L-#3@4" C/C	14-2L-#3@4" C/C	16-2L-#3@4" C/C	-	-	-
RB7	10"	14"	3-#5	3-#5	3-#5	3-#5 +2-#5	3-#5	3-#5 +2-#5	12-2L-#3@4" C/C	10-2L-#3@4" C/C	12-2L-#3@4" C/C	-	-	-
RB8	10"	14"	3-#5	3-#5	3-#5	3-#5 +2-#5	3-#5	3-#5 +2-#5	16-2L-#3@4" C/C	14-2L-#3@4" C/C	16-2L-#3@4" C/C	-	-	-
RB9	10"	14"	3-#5	3-#5	3-#5	3-#5 +2-#5	3-#5	3-#5 +2-#5	13-2L-#3@4" C/C	11-2L-#3@4" C/C	13-2L-#3@4" C/C	-	-	-
RB10,RB19	10"	14"	3-#5	3-#5	3-#5	3-#5 +2-#5	3-#5	3-#5 +2-#5	11-2L-#3@4" C/C	9-2L-#3@4" C/C	11-2L-#3@4" C/C	-	-	-
RB11	10"	12"	2-#5	2-#5	2-#5	3-#5	2-#5	3-#5	12-2L-#3@4" C/C	10-2L-#3@4" C/C	12-2L-#3@4" C/C	-	-	-
RB12	10"	12"	2-#5	2-#5	2-#5	3-#5	2-#5	3-#5	16-2L-#3@4" C/C	14-2L-#3@4" C/C	16-2L-#3@4" C/C	-	-	-
RB13	10"	12"	2-#5	2-#5	2-#5	3-#5	2-#5	3-#5	13-2L-#3@4" C/C	11-2L-#3@4" C/C	13-2L-#3@4" C/C	-	-	-
RB14	10"	12"	2-#5	2-#5	2-#5	3-#5	2-#5	3-#5	11-2L-#3@4" C/C	9-2L-#3@4" C/C	11-2L-#3@4" C/C	-	-	-
RB15,RB16,RB17 ,RB18,RB20,RB21 ,RB22,RB23,RB26 ,RB27	10"	14"	3-#5	3-#5	3-#5	3-#5 +2-#5	3-#5	3-#5 +2-#5	14-2L-#3@4" C/C	12-2L-#3@4" C/C	14-2L-#3@4" C/C	-	-	-
RB24	10"	14"	3-#5 +2-#5	3-#5 +2-#5	3-#5 +2-#5	3-#5 +2-#5	3-#5	3-#5 +2-#5	13-2L-#3@4" C/C	11-2L-#3@4" C/C	13-2L-#3@4" C/C	1-#5EF	-	-
RB25	10"	14"	2-#5	2-#5	2-#5	3-#5	3-#5	3-#5	11-2L-#3@4" C/C	9-2L-#3@4" C/C	11-2L-#3@4" C/C	-	-	-

2 S 4.0 SCHEDULE OF REINFORCED CONCRETE BEAM
SCALE NONE

A.D.A. ALFILER
ENGINEERING CONSULTANT
STRUCTURAL ENGINEERS PROJECT MANAGERS
Rm. 3-F 3rd Flr. Alfred Bldg., 1191 Quirino Highway, Novaliches, Quezon City
METRO MANILA PHILIPPINES
Tel. Nos.: (02) 418-3059 (02) 419-0136 Telefax No: (02) 418-6840
E-mail: adaalfillerec@yahoo.com Mobile No.: (0920) 923-5232

LEGENDS:

1. LC = CLEAR SPAN/LENGTH
2. NMAX = MAXIMUM NUMBER OF REBARS PER LAYER ALLOWABLE IN A GIVEN WIDTH "B" OF BEAM

NOTES ON BEAM DETAILS:

1. NO SPLICING FOR TOP BARS ALLOWED WITHIN A DISTANCE OF "2D" OR LC/4.5, WHICHEVER IS GREATER, FROM FACE OF COLUMN SUPPORT;
2. SPLICING FOR BOTTOM BARS ARE ALLOWED ONLY WITHIN A DISTANCE OF"2D" OR LC/4.5, WHICH EVER IS LESSER, FROM FACE OF COLUMN SUPPORT;
3. SPLICE LENGTH SHALL BE PROVIDED THROUGH OUT THE JOINT WITH STIRRUPS SPACED @ 4" ON CENTER.

4 S 4.0 NOTES ON BEAM
SCALE NONE

BAR SIZE	DIAMETER (INCHES)	180° HOOK		90° HOOK
		D+2db	L	L
#3 (10ø)	0.375	3"	5"	6"
#4 (12ø)	0.500	4"	6"	8"
#5 (16ø)	0.625	5"	7"	10"
#6 (20ø)	0.750	6"	8"	12"
#8 (25ø)	1.000	8"	11"	16"
#9 (28ø)	1.128	12"	15"	19"
#10 (32ø)	1.270	13"	17"	22"

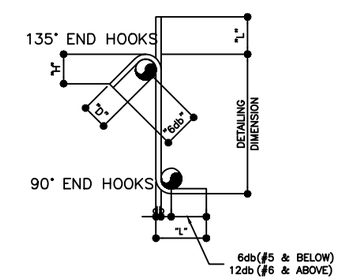

BAR SIZE	LAP SPLICE (Ld)	
	TYPE "A"	TYPE "B"
#3 (10ø)	16"	12"
#4 (12ø)	18"	14"
#5 (16ø)	21"	16"
#6 (20ø)	30"	23"
#8 (25ø)	44"	36"
#9 (28ø)	56"	48"
REMARKS:	TYPE A	BUNDLED
	TYPE B	INDIVIDUAL

BAR SIZE	DIAMETER (INCHES)	135° HOOK		90° HOOK
		L	H	L
#3 (10ø)	0.375	5"	4"	4"
#4 (12ø)	0.500	7"	5"	5"
#5 (16ø)	0.625	8"	6"	6"
#6 (20ø)	0.750	11"	7"	12"
#8 (25ø)	1.000	15"	9"	16"

6 S 4.0 ALL GRADE LAP SPLICES
SCALE NONE

7 S 4.0 ALL GRADE STIRRUPS AND TIE HOOK
SCALE NONE

ARCHITECTS
P.O. Box 6
Kolonia, POHNPEI
FSM 96941
Tel. (691) 320-2966
email add.:
archrsroque@yahoo.com

CONSULTANT

PROPOSED DECEM/NEOC BLDG EXPANSION & REFURBISHING (PALIKIR GOV.CAMPUS)

CONTENTS
- AS SHOWN

Approved
Approved

REVISION	BY

DATE: SEPTEMBER 2020
SCALE: AS SHOWN
DRAWN:
JOB:
SHEET
S-004

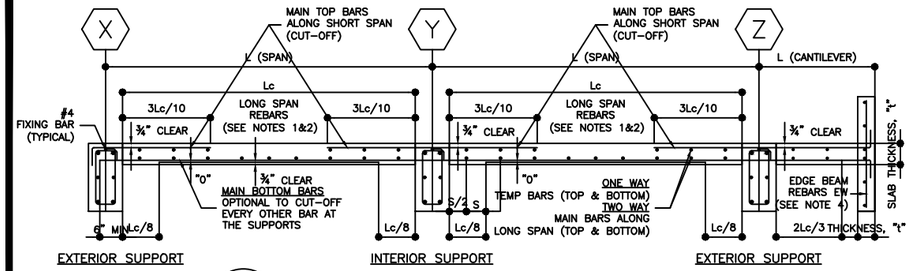

1 / S 5.0 SLAB SECTION ALONG SHORT SPAN
SCALE NONE

NOTES ON SLAB DETAILS:

1. ONE-WAY SLAB REINFORCEMENTS ALONG LONG SPAN AS SHOWN ARE TEMPERATURE BARS;
2. TWO-WAY SLAB REINFORCEMENTS ALONG LONG SPAN AS SHOWN ARE MAIN BARS;
3. IF TOP BARS OF ADJACENT SLABS DIFFER AT THEIR COMMON SUPPORT, SMALLER SPACING SHALL GOVERN;
4. SCHEDULE OF MINIMUM TEMPERATURE BARS FOR SLAB SHALL BE AS FOLLOWS:

SLAB THICKNESS ("t", in)	TEMPERATURE BARS (SIZE & SPACING)
4	#3 @ 10 ¾"
5	#3 @ 8 ½"
6	#3 @ 6 ¾"

SLAB MARK	THICKNESS ("t", in)	BAR SIZE		TWO-WAY SLAB STEEL REINFORCEMENT						ONE-WAY SLAB STEEL REINFORCEMENT				REMARKS
				ALONG SHORT SPAN			ALONG LONG SPAN			ALONG SHORT SPAN			BOTHWAYS	
		MAIN	TEMP	LEFT END TOP BARS	MID-SPAN BOT BARS	RIGHT END TOP BARS	LEFT END TOP BARS	MID-SPAN BOT BARS	RIGHT END TOP BARS	LEFT END TOP BARS	MID-SPAN BOT BARS	RIGHT END TOP BARS	TEMP BARS	
S-1	5	#4	#3	7"	7"	7"	7"	7"	7"	–	–	–	8 ½"	CONVENTIONAL
CS-1	5	#4	#3	–	–	–	–	–	–	7"	14"	7"	8 ½"	SEE DETAIL 1/S5.0

2 / S 5.0 CONVENTIONAL SLAB CONSTRUCTION
SCHEDULE OF REINFORCED CONCRETE SLAB
SCALE NONE

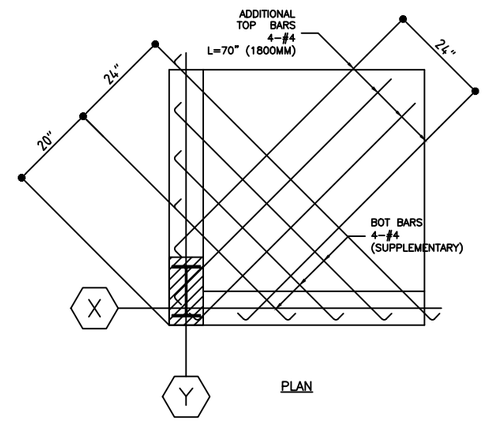

5 / S 5.0 WHERE APPLICABLE
CORNER SLAB DETAIL
SCALE NONE

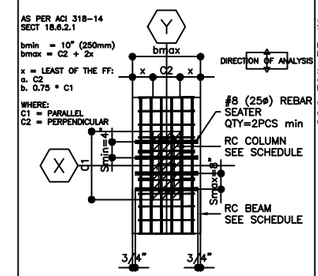

KEY PLAN
CASE 1

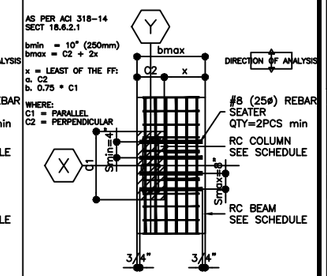

KEY PLAN
CASE 2

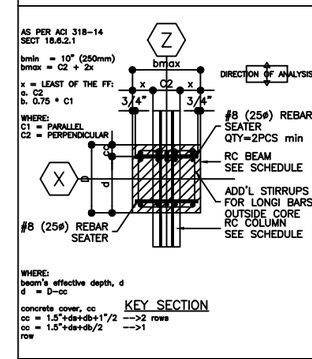

KEY SECTION

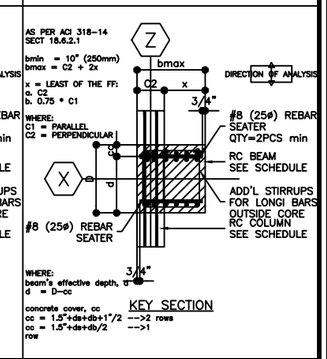

KEY SECTION

7 / S 5.0 WITHOUT CROSS BEAM
BEAM WIDER THAN COLUMN DETAIL
SCALE NONE

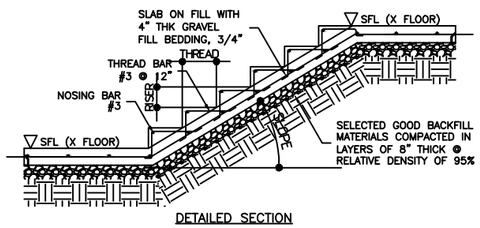

DETAILED SECTION

3a / S 5.0 WHERE APPLICABLE
TYPICAL STAIR ON FILL DETAIL
SCALE NONE

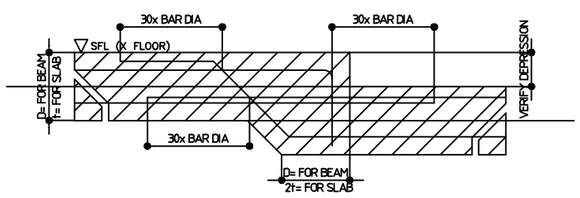

DETAILED SECTION

3b / S 5.0 WHERE APPLICABLE
TYPICAL DETAIL FOR BEAM OR SLAB CHANGE SOFFIT
SCALE NONE

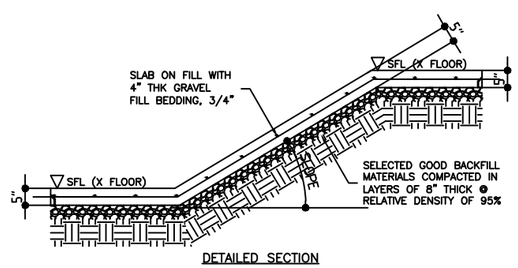

DETAILED SECTION

4a / S 5.0 DRIVEWAY (RESIDENTIAL)
TYPICAL SLAB ON FILL DETAIL
SCALE NONE

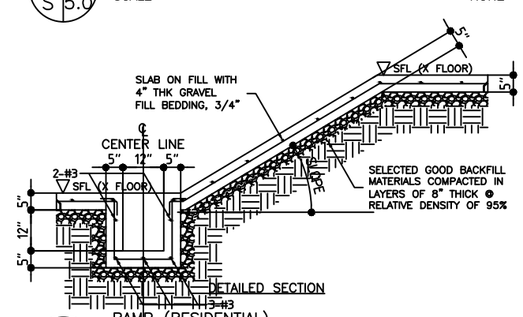

DETAILED SECTION

4b / S 5.0 RAMP (RESIDENTIAL)
TYPICAL SLAB ON FILL DETAIL
SCALE NONE

NOTES ON CHB WALL:

1. OPENING FOR DOORS, WINDOWS, AND OTHER GAPS ON CHB WALL SHALL BE PROVIDED WITH LINTEL BEAM OF THE SAME WIDTH AS THE CHB WALLS;
2. LINTEL BEAMS SHALL BE PROVIDED AT ±118" (±3000MM) SPACING FOR HIGH CHB WALLS, AND ATOP OF CHB WALLS WITHOUT TOP LATERAL SUPPORT;
3. LINTEL BEAMS SHALL BE IN ACCORDANCE TO DETAILS AND SCHEDULE OF LINTEL BEAM @ OPENING;
4. VERIFY ARCHITECTURAL AND OTHER RELATED ENGINEERING PLANS FOR EXACT WALL OPENING LOCATION.

LB-1	LB-2	LB-3	LB-4
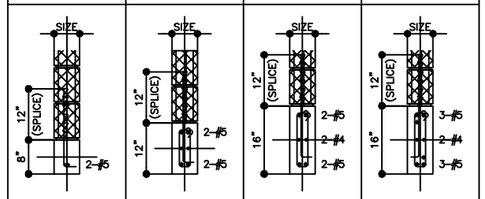			
–	#3 STIRRUPS, 1 @ 2", REST @ 6" OC	#3 STIRRUPS, 1 @ 2", REST @ 8" OC	#3 STIRRUPS, 1 @ 2", REST @ 8" OC
MAXIMUM SPAN 47 ¼" (1200MM)	MAXIMUM SPAN 98 ½" (2500MM)	MAXIMUM SPAN 138" (3500MM)	MAXIMUM SPAN 157 ½" (4000MM)

6 / S 5.0 WHERE APPLICABLE
DETAILS AND SCHEDULE OF LINTEL BEAM AT OPENING
SCALE NONE

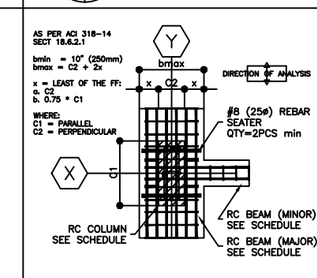

KEY PLAN
CASE 1

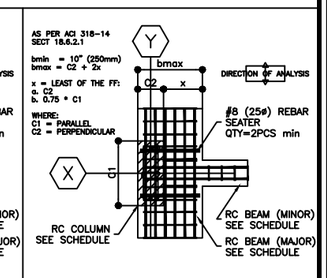

KEY PLAN
CASE 2

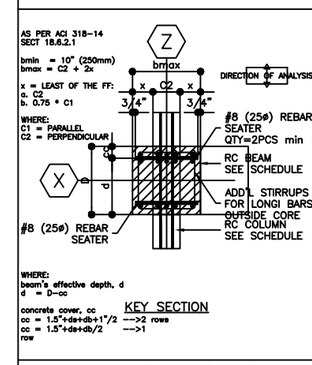

KEY SECTION

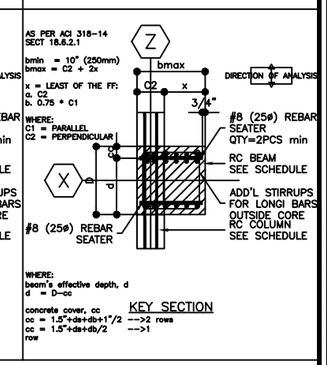

KEY SECTION

8 / S 5.0 WITH CROSS BEAM
BEAM WIDER THAN COLUMN DETAIL
SCALE NONE

ARCHITECTS
P.O. Box 6
Kolonia, POHNPEI
FSM 96941
Tel. (691) 320-2966
email add.:
archrsroque@yahoo.com
CONSULTANT

PROPOSED DECEM/NEOC BLDG EXPANSION & REFURBISHING (PALIKIR GOV.CAMPUS)

CONTENTS
- AS SHOWN

Approved
Approved

REVISION	BY

DATE: SEPTEMBER 2020
SCALE: AS SHOWN
DRAWN:
JOB:
SHEET
S-005

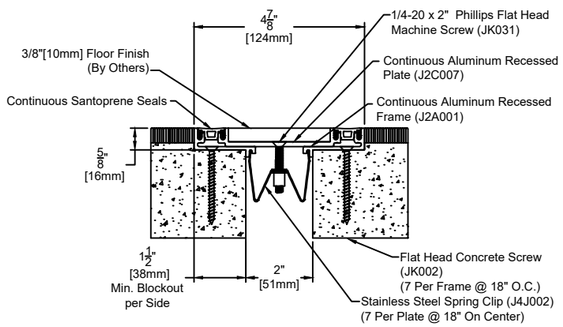

Note:
To determine blockout depth, deduct thickness of floor finish from frame height.

1 S 6.0 FLOOR TO FLOOR SEISMIC GAP DETAIL
SCALE NONE

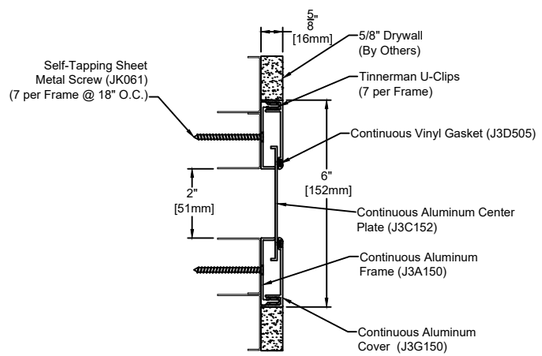

3 S 6.0 WALL TO WALL SEISMIC GAP DETAIL
SCALE NONE

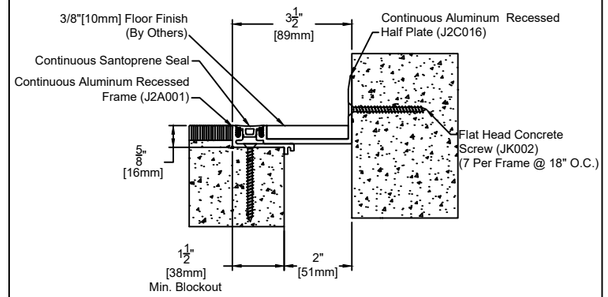

Note:
To determine blockout depth, deduct thickness of floor finish from frame height.

5 S 6.0 FLOOR TO WALL SEISMIC GAP DETAIL
SCALE NONE

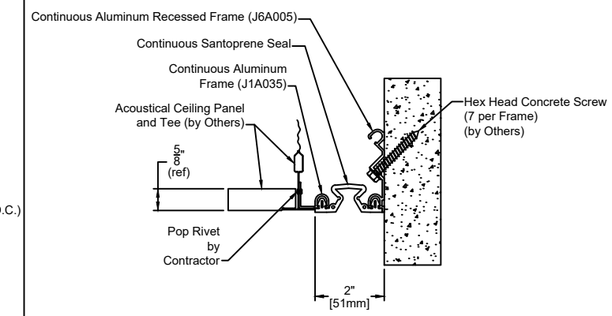

7 S 6.0 CEILING TO WALL SEISMIC GAP DETAIL
SCALE NONE

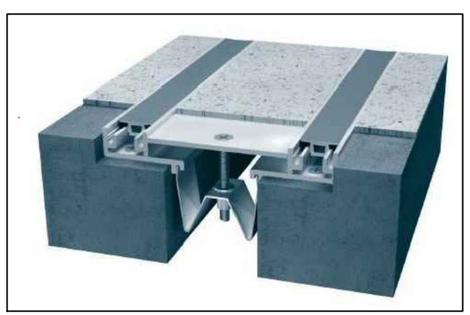

2 S 6.0 FLOOR TO FLOOR SEISMIC GAP PERSPECTIVE
SCALE NONE

4 S 6.0 WALL TO WALL SEISMIC GAP PERSPECTIVE
SCALE NONE

6 S 6.0 FLOOR TO WALL SEISMIC GAP PERSPECTIVE
SCALE NONE

8 S 6.0 CEILING TO WALL SEISMIC GAP PERSPECTIVE
SCALE NONE

ARCHITECTS
P.O. Box 6
Kolonia, POHNPEI
FSM 96941
Tel. (691) 320-2966
email add.:
archrsroque@yahoo.com

CONSULTANT

PROPOSED DECEM/NEOC BLDG EXPANSION & REFURBISHING (PALIKIR GOV.CAMPUS)

CONTENTS
- AS SHOWN

Approved

Approved

REVISION	BY

DATE: SEPTEMBER 2020
SCALE: AS SHOWN
DRAWN:
JOB:
SHEET
S-006