GENERAL ELECTRICAL LEGEND

LIGHTING LEGEND

B	1x250W, HID METAL HALIDE, PENDENT LIGHT FIXTURE, IP20, 220V, 50HZ, MINIMUM MOUNTING MIN HEIGHT 3000MM, MAXIMUM 4000MM.
A	1x165W, HID METAL HALIDE, PENDENT LIGHT FIXTURE, IP20, 220V, 50HZ, MINIMUM MOUNTING HEIGHT 3000MM, MAXIMUM 4000MM.
M3	1x18 W , WALL MOUNTED ABOVE MIRROR LIGHTING FIXTURE, MOUNTING HEIGHT DEPENDS TO THE MIRROR HEIGHT, WATER PROOF, IP 54, 220V, 50 Hz.
M6	2x36 W , SURAFCE MOUNTED FLUORESCENT LIGHTING FIXTURE, IP 20, 220V, 50 Hz, MOUNTING HEIGHT 2500mm ABOVE F.F.L
M6	2x36 W , SURFACE MOUNTED FLUORESCENT LIGHTING FIXTURE,WATER PROOF, IP 54, 220V, 50 Hz, MOUNTING HEIGHT 2500mm ABOVE F.F.L
M5	2x26 W , WALL MOUNTED FLUORESCENT LIGHTING FIXTURE, IP 20, 220V, 50 Hz, MINIMUM HEIGHT 2500mm ABOVE F.F.L
M2	4x18 W , RECESSED MOUNTED FLUORESCENT LIGHTING FIXTURE, IP 20, 220V, 50 Hz, MOUNTING HEIGHT 2500mm ABOVE F.F.L
	1x 400W ,WALL MOUNTED HID METAL HALIDE LIGHTING FIXTURE,WEATHER PROOF,IP54, 220V,50Hz,MINIMUM MOUNTING HEIGHT 5000mm ABOVE F.F.L
M1	1x 18W ,WALL MOUNTED EMERGENCY LIGHTING FIXTURE ,IP , 20 220V 50,Hz,MINIMUM MOUNTING HEIGHT 2100mm ABOVE A.F.F
E	1x5W,SINGLE SIDED EXIT LIGHT WITH BATTERY PACK TO OPERATE 90MIN 220V,50Hz,MINIMUM MOUNTING HEIGHT 2500mm ABOVE F.F.L
E	1x5 W , DOUBLE SIDED EXIT LIGHT WITH BATTERY PACK TO OPERATE 90 MIN , 220V, 50 Hz, MOUNTING HEIGHT 2400mm ABOVE F.F.L
S	SINGLE POLE LIGHTING SWITCH, 10A, 220V,50Hz, MOUNTING HEIGHT 1200mm ABOVE F.F.L
$	SINGLE POLE LIGHTING SWITCH,WATER PROOF,IP54, 20A, 220V,50,Hz,MOUNTING HEIGHT 1200mm ABOVE F.F.L
S3	3WAY LIGHTING SWITCH, 20A, 220V 50Hz,MOUNTING HEIGHT 1200mm ABOVE F.F.L
S4	4WAY LIGHTING SWITCH 20A, 220V ,50Hz,MOUNTING HEIGHT 1200mm ABOVE F.F.L

GENERAL POWER LEGEND

	FIRE EXTINGUISHER
	1PH BREAKER (AUTOMATIC SWITCH)
	3PH BREAKER SYSTEM (AUTOMATIC SWITCH)
PB-□□	CIRCUIT HOME RUN TO ELECTRICAL PANEL BOARD
	CONTACTOR
	FUSE
	POWER ON
	POWER OFF

POWER & COMMUNICATION LEGEND

	NON-FUSIBLE SAFETY DISCONNECT SWITCH, THREE PHASE, WALL MOUNTED, 40A, 380V, 50Hz, MOUNTING HEIGHT 1500mm ABOVE F.F.L
	NON-FUSIBLE SAFETY DISCONNECT SWITCH, SINGLE PHASE, WALL MOUNTED, 30A, 220V, 50Hz, MOUNTING HEIGHT 1500mm ABOVE F.F.L
W	NON-FUSIBLE SAFETY DISCONNECT SWITCH,WATER PROOF, SINGLE PHASE, WALL MOUNTED, 30A, 220V, 50Hz, MOUNTING HEIGHT 1500mm ABOVE F.F.L
	MOTOR STARTING SWITCH FOR CEILING FAN, WALL MOUNTED, 10A, 220V, 50Hz, MOUNTING HEIGHT 1200mm ABOVE F.F.L
	DUPLEX RECEPTACLE, 20A, 220V, 50Hz. MOUNTING HEIGHT 450mm ABOVE F.F.L
GFCI	GROUND-FAULT CIRCUIT-INTERUPTER (GFCI)DUPLEX RECEPTACLE, 20A, 220V, 50Hz. MOUNTING HEIGHT 450mm ABOVE F.F.L
WP	WATER PROOF(WP) DUPLEX RECEPTACLE, 20A, 220V, 50Hz. MOUNTING HEIGHT 450mm ABOVE F.F.L
	SINGLE POWER RECEPTACLE, WALL MOUNTED, 30A, 220V, 50Hz.
PB	ELECTRICAL PANEL BOARD.
MDP	MDP(MAIN DISTRIBUTION PANEL).
SDP	SDP(SUB DISTRIBUTION PANEL).
	CONTROL PANEL FOR INTERLOCKING EXHAUST FAN WITH MOTORIZED DAMPER
	DATA / TELEPHONE BOX, MOUNTING HEIGHT 450mm ABOVE F.F.L
TNDP/DNDP	TNDP/DNDP(TELEPHONE NETWORK DISTRIBUTION PANEL & DATA NETWORK DISTRIBUTION PANEL)

FIRE ALARM & GROUNDING & LIGHTNING LEGEND

S	SINGLE STATION SMOKE ALARM, PHOTO ELECTRIC, 220 VAC, 50 Hz, WITH 9 VDC BATTERY BACKUP.
H	SINGLE STATION HEAT ALARM, PHOTO ELECTRIC, 220 VAC, 50 Hz, WITH 9 VDC BATTERY BACKUP.
	EXOTHERMIC WELD
	PIT FOR GROUND ROD(80X80X80)MM
	Ø20mm DIAMETER , COPPER GROUNDING ROD, 3 METER LENGTH
T	T-SPLICE EXOTHERMIC WELD
	600mm COPPER AIR TERMINAL
ATS	ATS(AUTOMATIC TRANSFER SWITCH).
SB	ELECTRICAL SWITCH BOARD

GENERAL ELECTRICAL NOTES:

1 - RECEPTACLES LEVEL ARE 450mm & 1200mm.
2 - ELECTRICAL PANEL LEVEL IS 1800mm TO THE HIGHEST.
3 - ALL EXTERNAL CABLE P.V.C CONDUIT ARE UNDER GROUND, 4 INCHES 100MM.
4 - THE GROUNDING RESISTANCE SHALL NOT EXCEED 25 OHMS PER NEC 250.56.
5 - THE HEIGHT OF EMERGENCY LIGHT FIXTURE ARE 2100mm FROM F.F.L.
6 - ALL RECEPTACLES IN WET AND DAMP LOCATIONS SHALL BE WATER PROOF OR G.F.C.I TYPE.
7 - EACH EXHAUST FAN SHALL BE PROVIDED WITH MOTORIZED OR GRAVITY DAMPERS WHICH CLOSE AUTOMATECALLY WHEN THE FAN IS NOT RUNNING.
8 - ALL RECEPTACLES FOR ELECTRICAL HAETERS ARE 1500 mm ABOVE F.F.L.
9 - EMERGENCY LIGHT AND EXIT LIGHT ARE INSTALED WITHOUT ANY SWITCHES.
10 - POWER RECEPTICAL SHALL BE INSTALLED ACCORDING TO THE MECHANICAL (SPLIT UNIT) EQUIPMENT'S SIZE & HEIGHT.
11 - PVC CONDUIT EXPOSED IN 50 DEGREES AMBIENT TEMPERATURE SHALL BE SCHEDULE 80.
12 - PVC CONDUIT SHALL BE IN ACCORDANCE WITH THE NEC 352.
13 - TVSS SHALL BE INSTALLED IN ALL BUILDING PANEL SERVING ELECTRONIC LOAD, FOR INSTALLATION SEE SITE MDP SINGLE LINE DIAGRAM.
14 - ALL ELECTRICAL PANELS SHALL HAVE CIRCUIT BREAKERS TYPES OF RCCB AND ELCB.
15 - COLOR CODE IS INCLUDED IN EACH PANEL SCHEDULE & SINGLE LINE DIAGRAM SHEETS.
16 - 1x250W SUSPENDED METAL HALIDE TYPE B LIGHTING FIXTURE SHALL BE SHOCK PROOF FOR NOT BEING DAMAGED.
17 - ALL BRANCH CIRCUIT WIRING SHALL BE COPPER, MINIMUM #4 MM2 (#12 AWG) INSTALLED IN METAL CONDUIT.
ALL ELECTRICAL POWER CONDUCTORS #4 MM2 AND #6 MM2 SHALL BE SOLID COPPER.
ALL OTHER SIZES SHALL BE STRANDED COPPER.
18 FOR CKT's THAT SERVES ELECTRICAL FIXTURES IN WET AREAS, CIRCUIT BREAKER's SHALL BE RESIDUAL CURRENT BREAKERS W/ OVERLOAD (RCBO), GROUND FAULT PROTECTOR (GFP), OR GROUND FAULT CIRCUIT INTERRUPTER (GFCI).
19 CONTRACTOR SHALL PROVIDE ONE PATCH PANEL PORT PER DATA OUTLET PLUS 20% SPARE. THE LARGEST PATCH PANEL ALLOWED SHALL BE 48 PORT AND THE SMALLEST 12 PORT. WHERE THE 12 PORT IS USED, IT SHALL BE MOUNTED ON AN 89 TYPE BLOCK FRAME FOR THE STATION CABLES.

GENERAL ELECTRICAL ABBREVIATION:

A	- AMP
A.F.F.L	- ABOVE FINISH FLOOR LEVEL
CB	- CIRCUIT BREAKER
CON	- CONDUIT
CF	- CEILLING FAN
CU	- CONDENSING UNIT
D.B	- DATA BOX
D.N.D.P	- DATA NETWORK DISTRIBUTION PANEL
EH	- ELECTRICAL HEATER
E.F	- EXHAUST FAN
EWH	- ELECTRICAL WATER HEATER
GFCI	- GROUND FAULT CIRCUIT INTERRUPTER
HH	- HAND HOLE
HZ	- HERTZ
L.F	- LIGHTING FIXTURE
M	- METER
MAX	- MAXIMUM
EMT	- ELECTRICAL METALLIC TUBING
MHH	- MAN HOLE
M.H	- MOUNTING HEIGHT
MDP	- MAIN DISTRIBUTION PANEL
N.T.S	- NOT TO SCALE
PVC	- POLY VINYL CHLORIDE
P.B	- PANEL BOARD
SU	- SPLIT UNIT
TYPE	- TYPICAL
T.B	- TELPHONE BOX
T.N.D.P	- TELEPHONE NETWORK DISTRIBUTION PANEL
UH	- UNIT HEATER
V	- VOLT
WP	- WATER PROOF
P	- POWER RECEPTACLE
L	- LIGHTING
TVSS	- TRANSIENT VOLTAGE SURGE SUPPRESSOR
S.B	- SWITCH BOARD
EMT	- ELECTRICAL METALLIC TUBE
ATS	- AUTOMATIC TRANSFER SWITCH
MAX	- MAXIMUM
MIN	- MINIMUM

1 / E00 GENERAL ELECTRICAL LEGEND & NOTES
SCALE: 1:100

REV No	DESCRIPTION	Date	APPROVED
3	REVISION	05.28.20	XX
2	100% SUBMITTAL		XX
1	FIRST ISSUE		XX

SCAL 1:100

DATE: May.28, 2020
DESIGNED BY: Wahidullah Azimy
CHECKED BY: Eng. Muslim
APPROVED BY: Ms. Aamaliah Alawaishah
SUBMITTED BY: UNDP/LOTFA
CONTRACT NO.: XX
T.O.: 01

UNITED NATIONS DEVELOPMENT PROGRAM
LOTFA PROJECT AFGHANISTAN
KABUL MOI

ENGINEERING DIVISION
PERs PROJECT

UNDP / LOTFA AFGHANISTAN
KABUL, AFGHANISTAN
BUILDING 02 - PHQ
GROUND FLOOR LIGHTING PLAN

SHEET NUMBER
E00–20

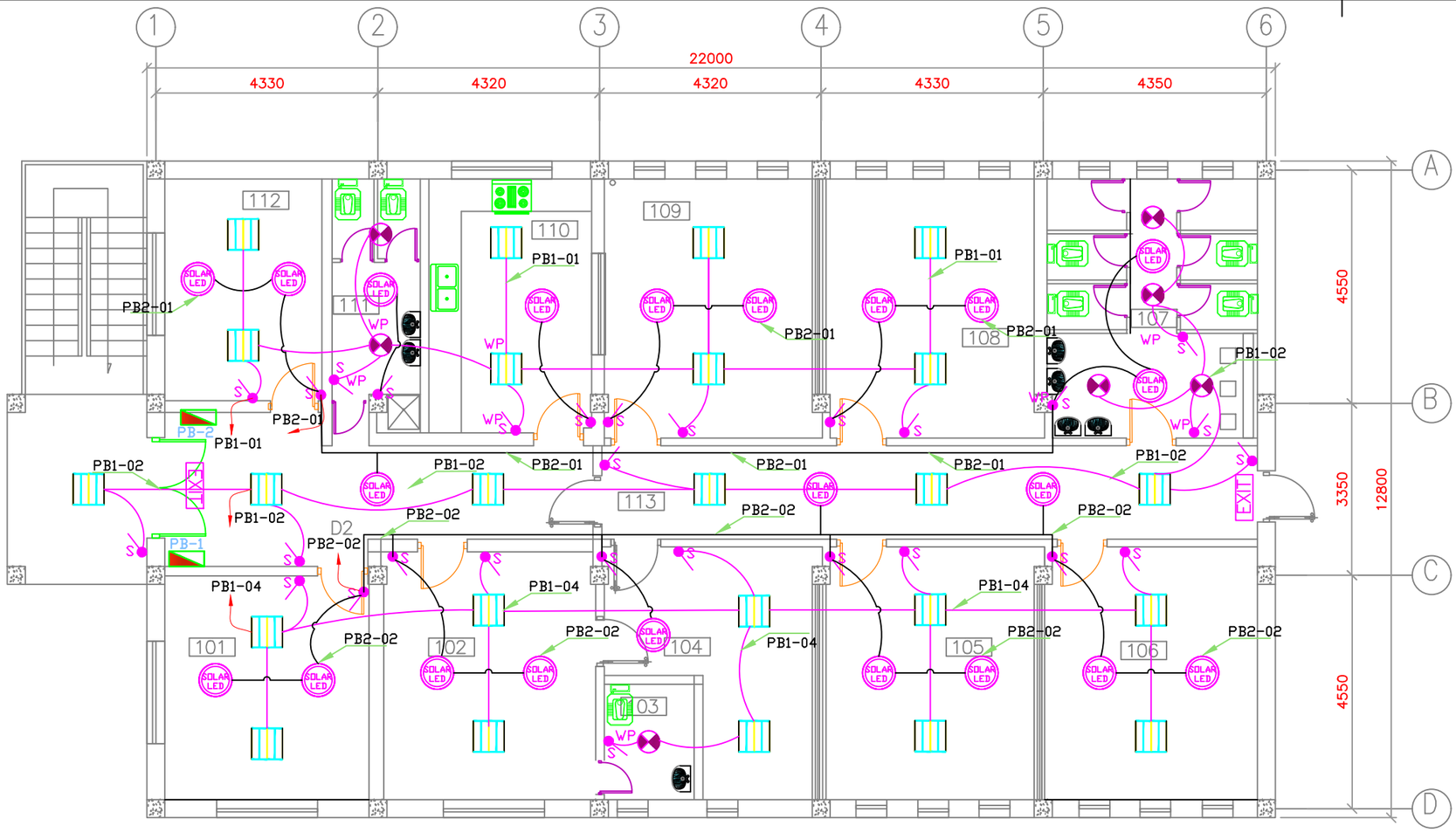

LEGEND:

- 18Watt - LED light Fixture Solar Powered
- EMERGENCY FLUORESCENT LIGHT FIXTURE
- 600mmX600mm LED or FLUORESCENT LIGHT FIXTURE 4-18 WATT LAMPS, 220V, 50HZ
- WP — WEATHER PROOF 600mmX600mm FLUORESCENT LIGHT FIXTURE 4-18 WATT LAMPS, 220V, 50HZ
- WP — WEATHER PROOF 300mmX1200mm FLUORESCENT LIGHT FIXTURE 2-32 WATT T8 LAMPS, 220V, 50HZ
- WP — WEATHER PROOF ABOVE MIRROR FLUORESCENT LIGHT FIXTURE , 220V, 50HZ
- 18Watt - LED light Fixture
- HORN/STROBE COMBO. 60 cd MIN. + 2100mm A.F.F.
- S — ONE/THREE/FOUR WAY SWITCH, 220V, 10Amp. MOUNTED HEIGHT = 1300mm A.F.F.
- WP S — WEATHER PROOF SWITCH, 220V, 10Amp. MOUNTED HEIGHT = 1300mm A.F.F.
- EXIT — SINGLE - FACE UNIVERSAL MOUNT EXIT LIGHT 152MM RED LETTERS

1 / E01 GROUND FLOOR LIGHTING PLAN

SCALE: 1:100

REV No	DESCRIPTION	Date	APPROVED
3	REVISION	05.28.20	XX
2	100% SUBMITTAL	XX	XX
1	FIRST ISSUE	XX	XX

SCAL 1:100

DATE: May 28, 2020
SUBMITTED BY: UNDP/LOTFA
CONTRACT NO.: XX
T.O.: 01

DESIGNED BY: Wahidullah Azimy
CHECKED BY: Eng. Muslim
APPROVED BY: Ms. Aamaliah Alawaishah

UNITED NATIONS DEVELOPMENT PROGRAM
LOTFA PROJECT AFGHANISTAN
KABUL MOI

ENGINEERING DIVISION

PERs PROJECT

UNDP / LOTFA AFGHANISTAN

KABUL, AFGHANISTAN

BUILDING 02 - PHQ
GROUND FLOOR LIGHTING PLAN

SHEET NUMBER
E01–20

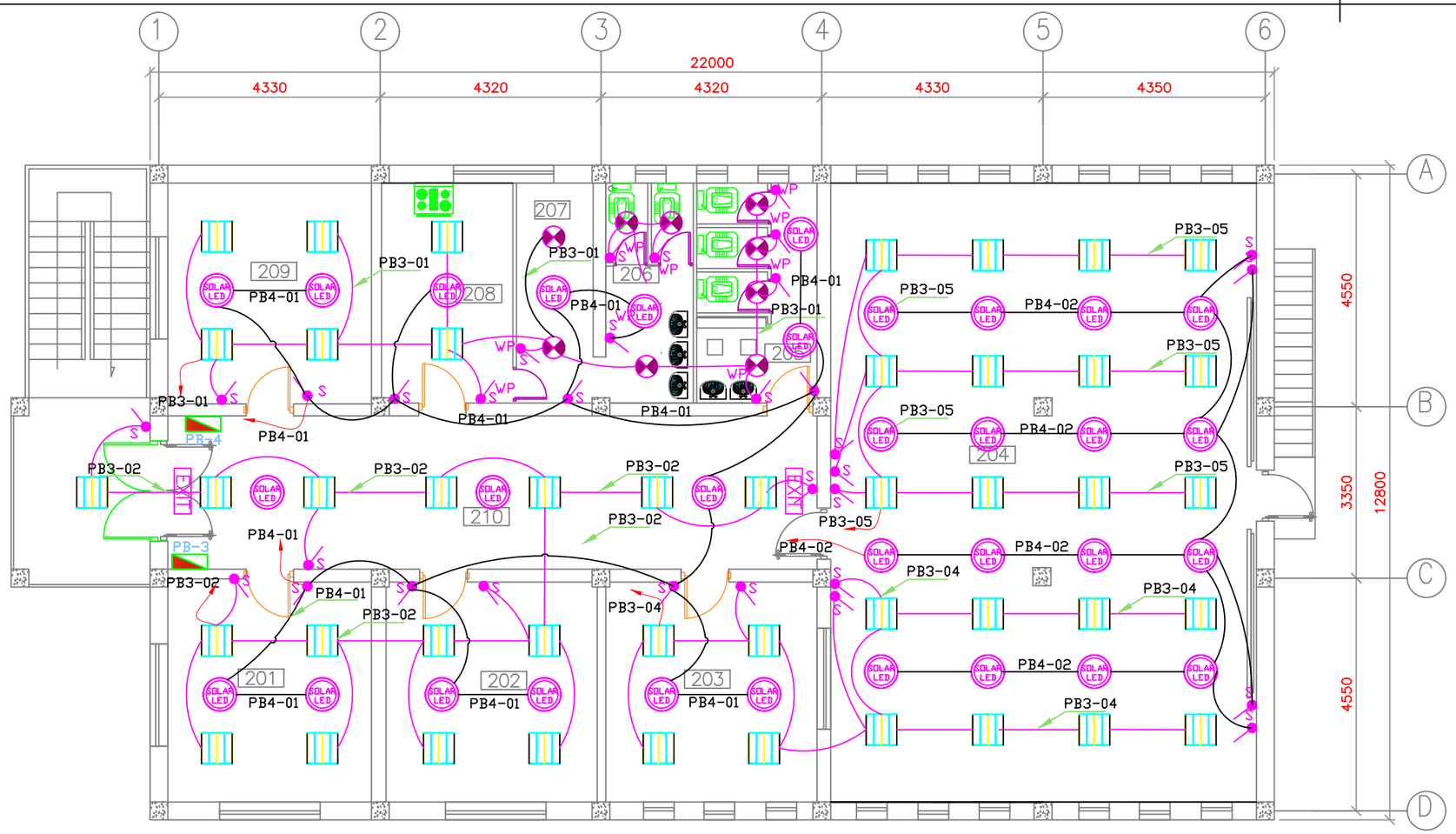

FIRST FLOOR LIGHTING PLAN

1 / E02

SCALE: 1:100

LEGEND:

- 18Watt - LED light Fixture Solar Powered
- 600mmX600mm LED or FLUORESCENT LIGHT FIXTURE 4-18 WATT LAMPS, 220V, 50HZ
- WP — WEATHER PROOF 600mmX600mm FLUORESCENT LIGHT FIXTURE 4-18 WATT LAMPS, 220V, 50HZ
- WP — WEATHER PROOF 300mmX1200mm FLUORESCENT LIGHT FIXTURE 2-32 WATT T8 LAMPS, 220V, 50HZ
- WP — WEATHER PROOF ABOVE MIRROR FLUORESCENT LIGHT FIXTURE , 220V, 50HZ
- 18Watt - LED light Fixture
- HORN/STROBE COMBO. 60 cd MIN. + 2100mm A.F.F.
- S — ONE/THREE/FOUR WAY SWITCH, 220V, 10Amp. MOUNTED HEIGHT = 1300mm A.F.F.
- WP S — WEATHER PROOF SWITCH, 220V, 10Amp. MOUNTED HEIGHT = 1300mm A.F.F.
- EXIT — SINGLE - FACE UNIVERSAL MOUNT EXIT LIGHT 152MM RED LETTERS

REV No	DESCRIPTION	Date	APPROVED
3	REVISION	05.28.20	XX
2	100% SUBMITTAL		XX
1	FIRST ISSUE		XX

SCAL 1:100

DATE: May 28, 2020
SUBMITTED BY: UNDP/LOTFA
CONTRACT NO.: XX XX T.O. 01

DESIGNED BY: Waliullah Azimy
CHECKED BY: Eng. Muslim
APPROVED BY: Ms. Aamaliah Alawaishah

UNITED NATIONS DEVELOPMENT PROGRAM
LOTFA PROJECT AFGHANISTAN
KABUL MOI

ENGINEERING DIVISION

PERs PROJECT

UNDP / LOTFA AFGHANISTAN

KABUL, AFGHANISTAN

BUILDING 02 - PHQ
GROUND FLOOR LIGHTING PLAN

SHEET NUMBER
E02–20

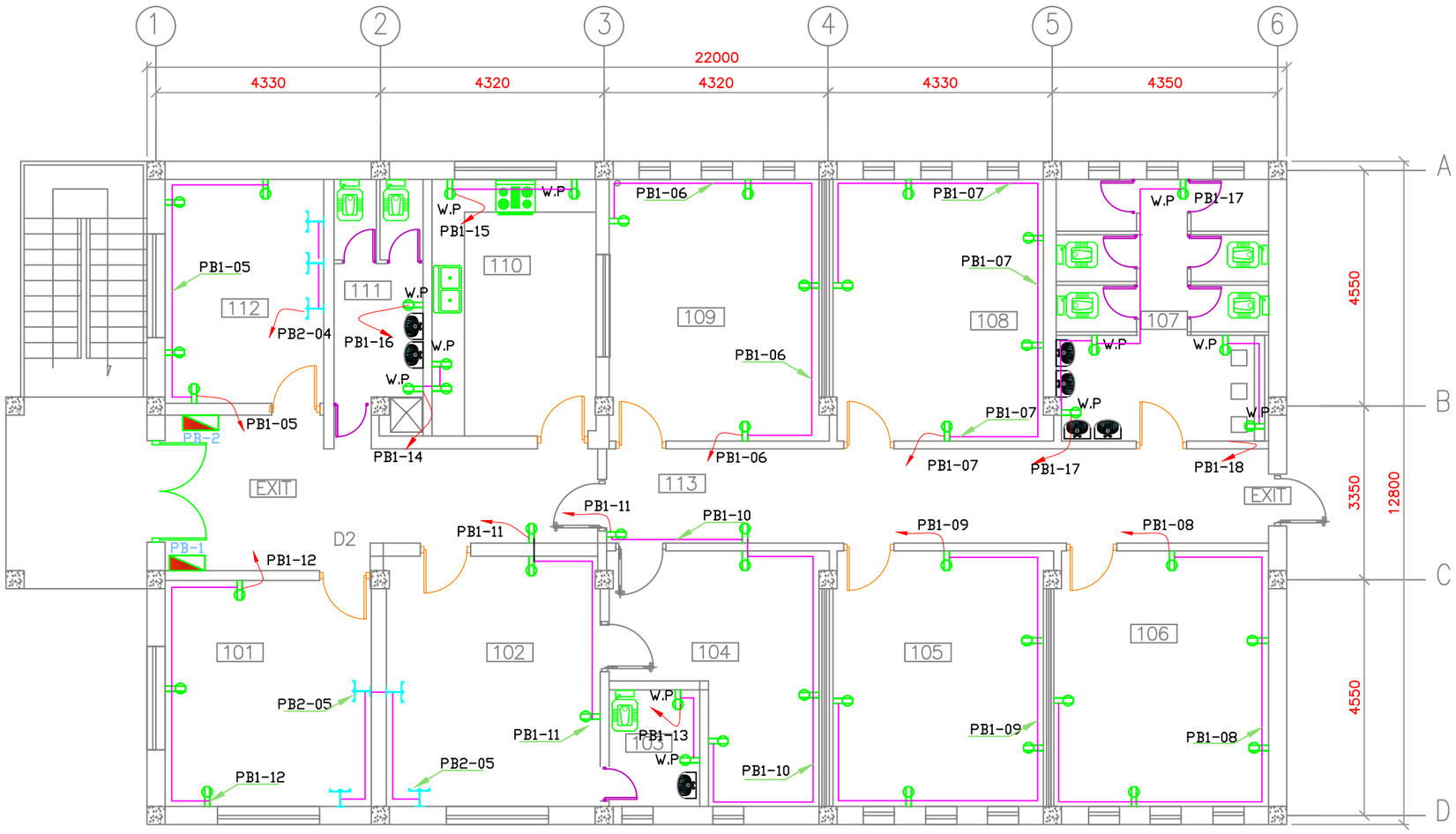

1

E03

GROUND FLOOR POWER PLAN

SCALE: 1:100 OP-1

DOUBLE CEE 7/7 'SCHUKO' STYLE RECEPTACLE . MOUNT AT 450mm A.F.F. OR APPROVED EQUAL.

W.P DOUBLE CEE 7/7 'SCHUKO' STYLE RECEPTACLE. MOUNT AT 120mm or 180mm A.F.F. OR APPROVED EQUAL.

REV No	DESCRIPTION	Date	APPROVED
3	REVISION	05.28.20	XX
2	100% SUBMITTAL		XX
1	FIRST ISSUE		XX

SCAL 1:100

DATE: May 28, 2020
SUBMITTED BY: UNDP/LOTFA
CONTRACT NO.: XX T.O.: 01

DESIGNED BY: Waheduddin Azimy
CHECKED BY: Eng. Muslim
APPROVED BY: Ms. Aamaliah Alawaishah

UNITED NATIONS DEVELOPMENT PROGRAM
LOTFA PROJECT AFGHANISTAN
KABUL MOI

ENGINEERING DIVISION

PERs PROJECT

UNDP / LOTFA AFGHANISTAN

KABUL, AFGHANISTAN

BUILDING 02 - PHQ
GROUND FLOOR LIGHTING PLAN

SHEET NUMBER

E03-20

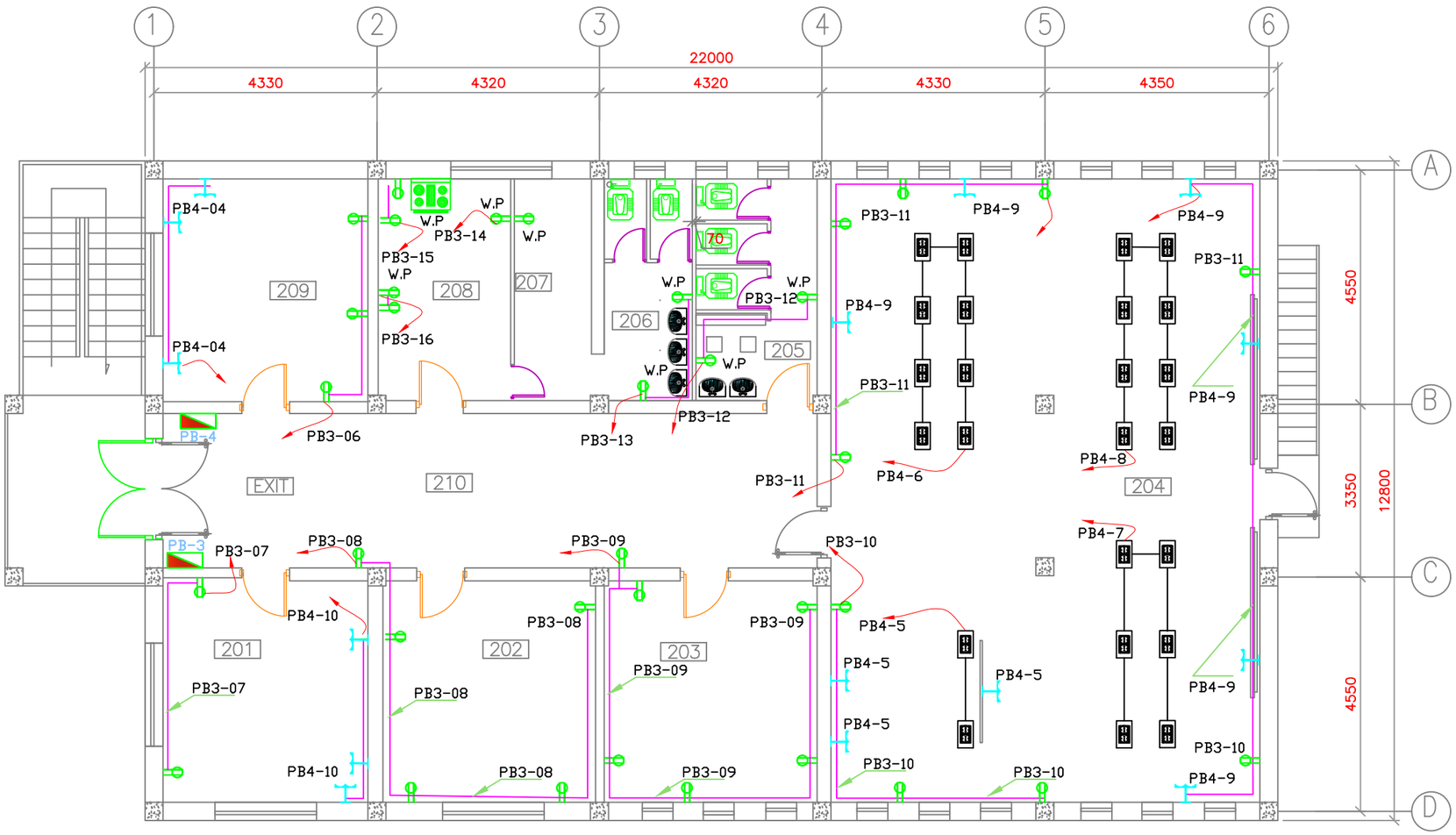

1

E04

FIRST FLOOR POWER OUTLET PLAN

SCALE: 1:100

DOUBLE CEE 7/7 "SCHUKO" STYLE RECEPTACLE . MOUNT AT 450mm A.F.F. OR APPROVED EQUAL.

DOUBLE CEE 7/7 "SCHUKO" STYLE RECEPTACLE . FLOOR MOUNTED AT A.F.F. AS PER THE INSTRUCTION OF ELECTICAL ENGINEER OR APPROVED EQUAL.

W.P DOUBLE CEE 7/7 "SCHUKO" STYLE RECEPTACLE . MOUNT AT 120mm or 180mm A.F.F. OR APPROVED EQUAL.

DUPLEX SOLAR RECEPTACLE, THREE PIN PLUG 1PH. 120V 20A, 50Hz, GROUNDING DIN TYPE MOUNTING HEIGHT =450MM ABOVE FINISH FLOOR LEVEL

REV No	DESCRIPTION	Date
3	REVISION	05.28.20
2	100% SUBMITTAL	XX
1	FIRST ISSUE	XX

APPROVED XX

SCAL 1:100

DATE: May 28, 2020
SUBMITTED BY: UNDP/LOTFA
CONTRACT NO.: XX
T.O.: 01

DESIGNED BY: Waheullah Achmy
CHECKED BY: Eng. Muslim
APPROVED BY: Ms. Aamaliah Alawaishah

UNITED NATIONS DEVELOPMENT PROGRAM
LOTFA PROJECT AFGHANISTAN
KABUL MOI

ENGINEERING DIVISION

PERs PROJECT

UNDP / LOTFA AFGHANISTAN

KABUL, AFGHANISTAN

BUILDING 02 - PHQ
GROUND FLOOR LIGHTING PLAN

SHEET NUMBER

E04–20

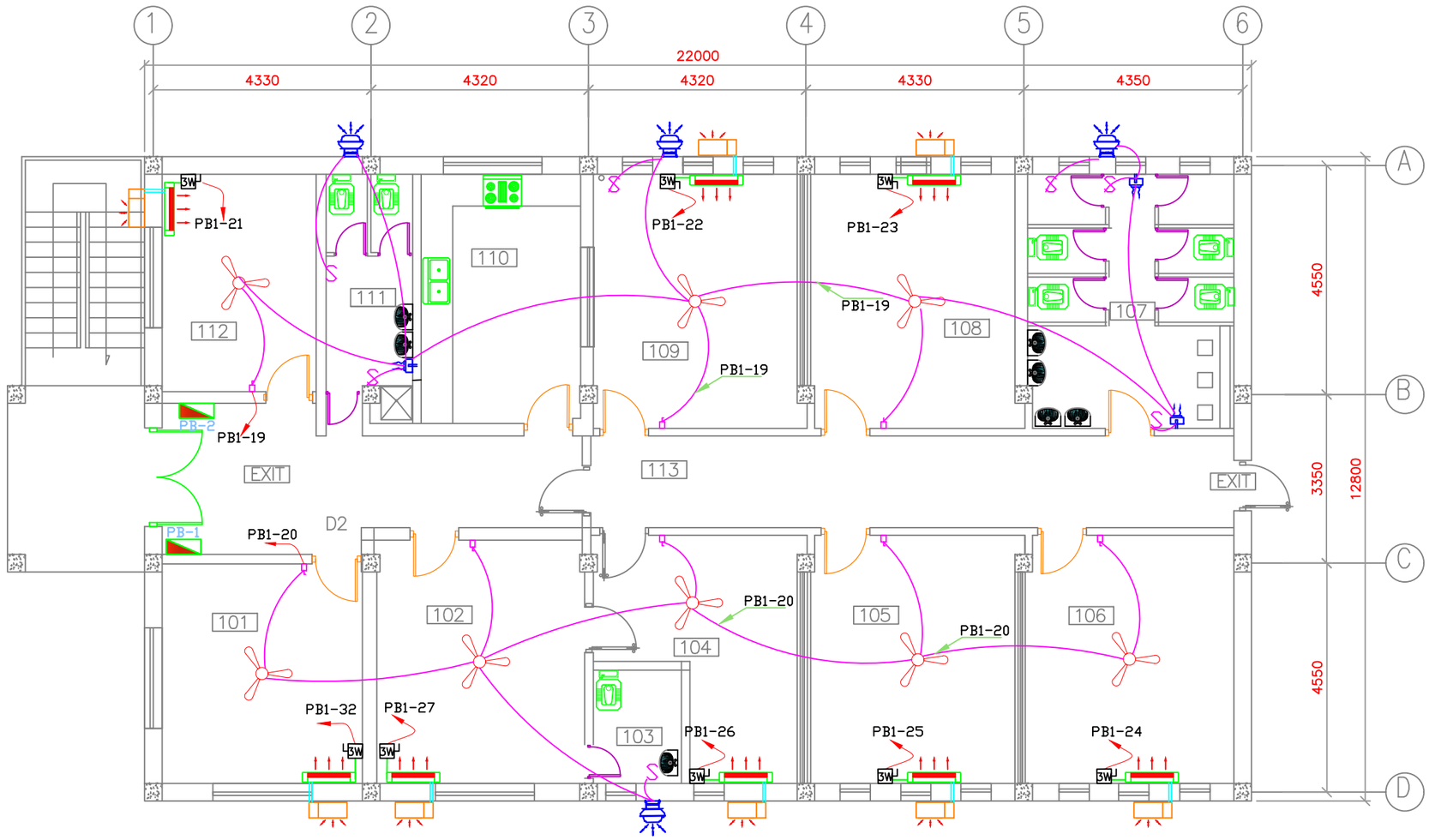

LEGEND:

16 A OR 40 A, 2P OR 3P, NON-FUSE DISCONNECT (SAFETY) SWITCH
GEWISS MODELS GW70 431 OR GW70 442, REPECTIVLELY, OR APPROVED EQUAL.
IP56- RATED DISCONNEC SWITCH.

1 / E05 GROUND FLOOR PLAN, AC, & EXHAUST FAN

SCALE: 1:100 OP-1

REV No	DESCRIPTION	Date	APPROVED
3	REVISION	05.28.20	XX
2	100% SUBMITTAL		XX
1	FIRST ISSUE		XX

SCAL 1:100

DATE: May 28, 2020
SUBMITTED BY: UNDP/LOTFA
CONTRACT NO.: XX T.O.: 01

DESIGNED BY: Waheduddin Azimy
CHECKED BY: Eng. Muslim
APPROVED BY: Ms. Aamaliah Alawaishah

UNITED NATIONS DEVELOPMENT PROGRAM
LOTFA PROJECT AFGHANISTAN
KABUL MOI

ENGINEERING DIVISION
PERs PROJECT

UNDP / LOTFA AFGHANISTAN
KABUL, AFGHANISTAN
BUILDING 02 - PHQ
GROUND FLOOR LIGHTING PLAN

SHEET NUMBER
E05-20

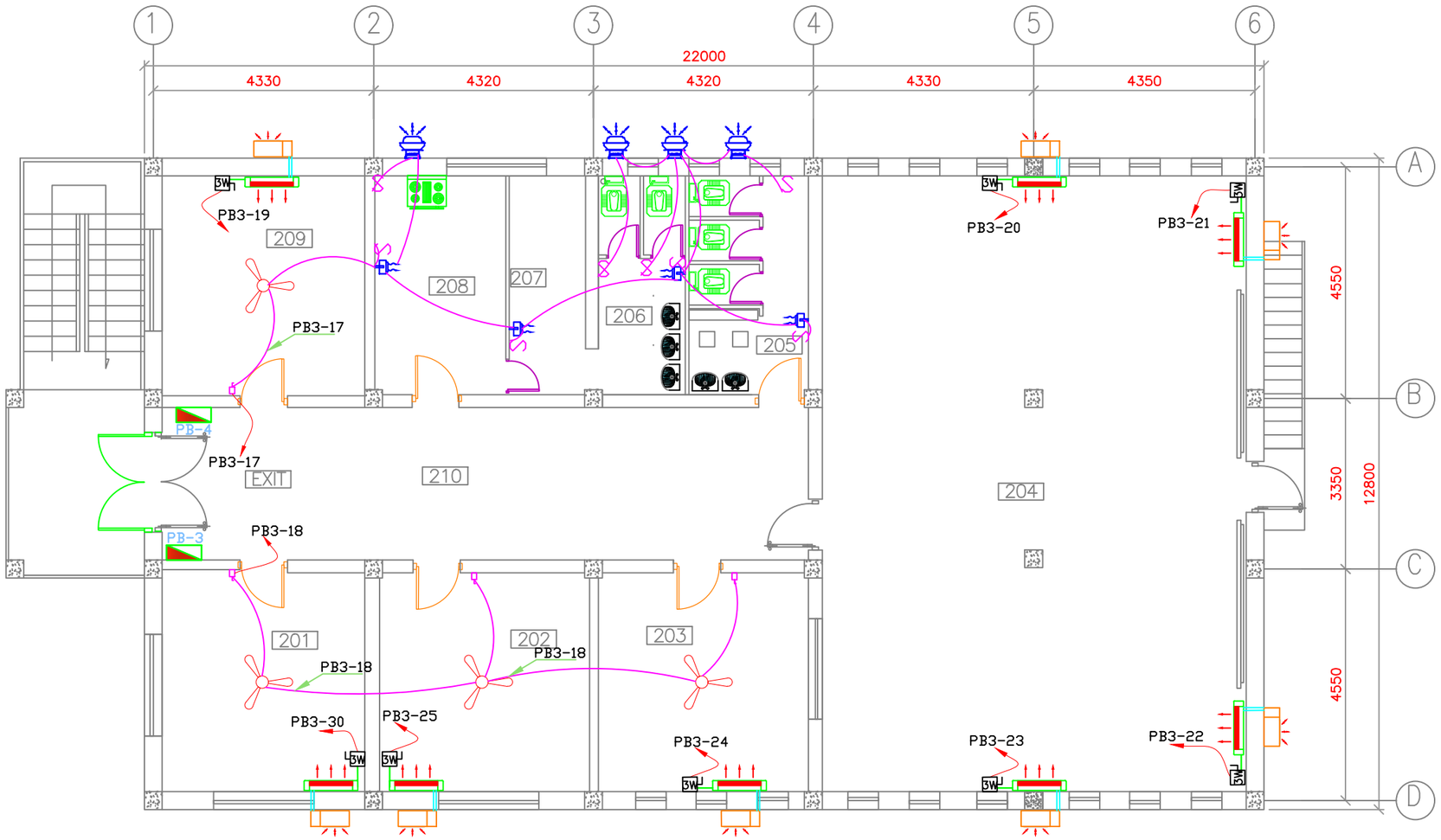

1

E06

FIRST FLOOR PLAN, AC, & EXHAUST FAN

SCALE: 1:100

LEGEND:

16 A OR 40 A, 2P OR 3P, NON-FUSE DISCONNECT (SAFETY) SWITCH
GEWISS MODELS GW70 431 OR GW70 442, REPECTIVLELY, OR APPROVED EQUAL.
IP56- RATED DISCONNEC SWITCH.

DOUBLE CEE 7/7 'SCHUKO' STYLE RECEPTACLE . MOUNT AT 450mm A.F.F.
OR APPROVED EQUAL.

REV No	DESCRIPTION	Date	APPROVED
3	REVISION	05.28.20	XX
2	100% SUBMITTAL		XX
1	FIRST ISSUE		XX

SCAL 1:100

DATE: May 28, 2020
SUBMITTED BY: UNDP/LOTFA
CONTRACT NO.: XX
T.O.: 01

DESIGNED BY: Waheduddin Azimy
CHECKED BY: Eng. Muslim
APPROVED BY: Ms. Aamaliah Alawaishah

UNITED NATIONS DEVELOPMENT PROGRAM
LOTFA PROJECT AFGHANISTAN
KABUL MOI

ENGINEERING DIVISION

PERs PROJECT

UNDP / LOTFA AFGHANISTAN

KABUL, AFGHANISTAN

BUILDING 02 - PHQ
GROUND FLOOR LIGHTING PLAN

SHEET NUMBER

E06–20

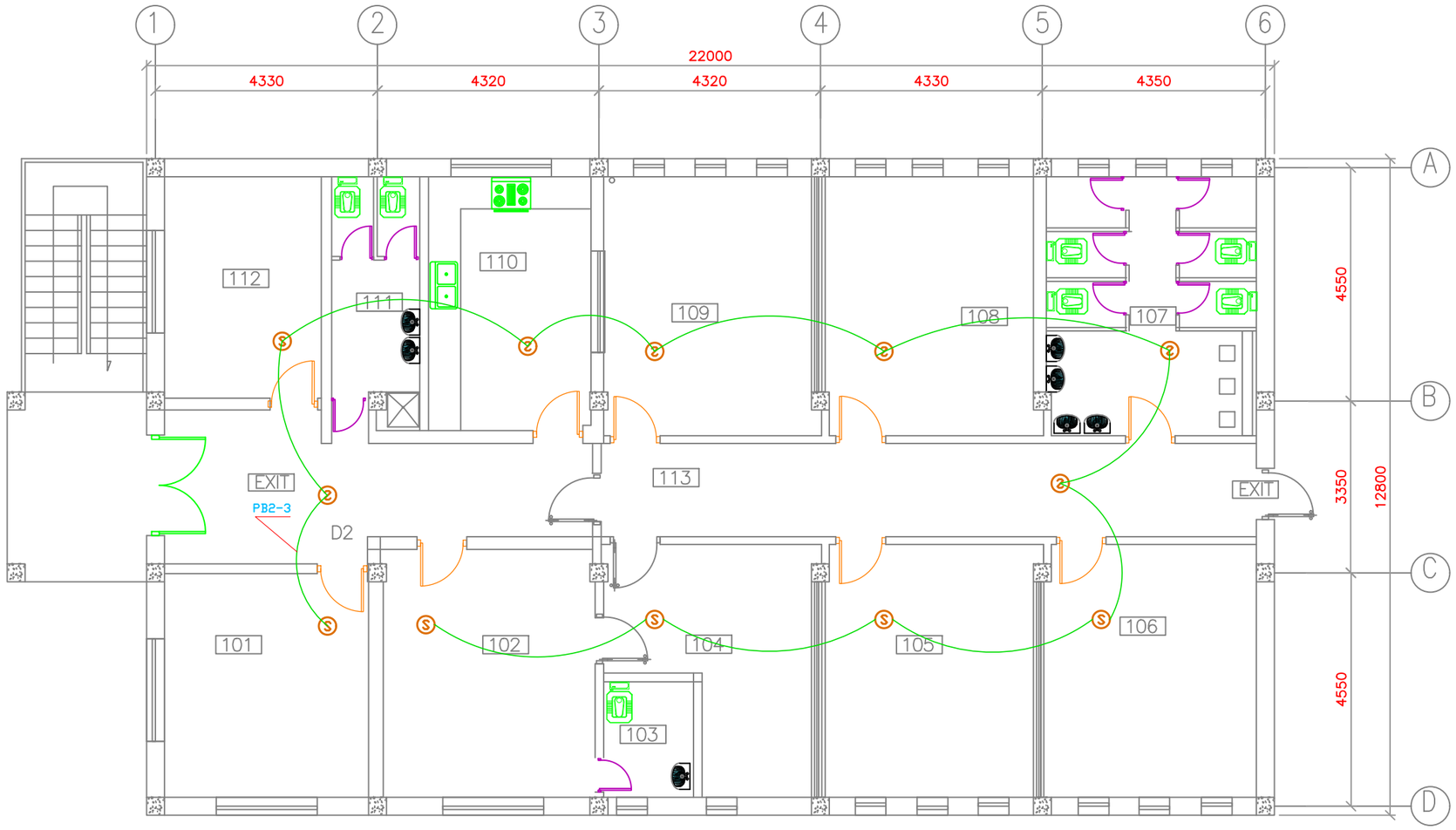

SINGLE STATION SMOKE ALARM, PHOTO ELECTRIC, 220 VAC, 50 Hz, WITH 9 VDC BATTERY BACKUP.

1
E07

GROUND FLOOR PLAN SMOKE ALARM

SCALE: 1:100

REV No	DESCRIPTION	Date
3	REVISION	XX
2	100% SUBMITTAL	05.28.20
1	FIRST ISSUE	XX
		XX
		APPROVED

SCAL 1:100

DATE: May 28, 2020
SUBMITTED BY: UNDP/LOTFA
CONTRACT NO.: XX
T.O.: 01

DESIGNED BY: Waheduddin Azimy
CHECKED BY: Eng. Muslim
APPROVED BY: Ms. Aamaliah Alawaishah

UNITED NATIONS DEVELOPMENT PROGRAM
LOTFA PROJECT AFGHANISTAN
KABUL MOI

ENGINEERING DIVISION

PERs PROJECT

UNDP / LOTFA AFGHANISTAN

KABUL, AFGHANISTAN

BUILDING 02 - PHQ
GROUND FLOOR LIGHTING PLAN

SHEET NUMBER
E07–20

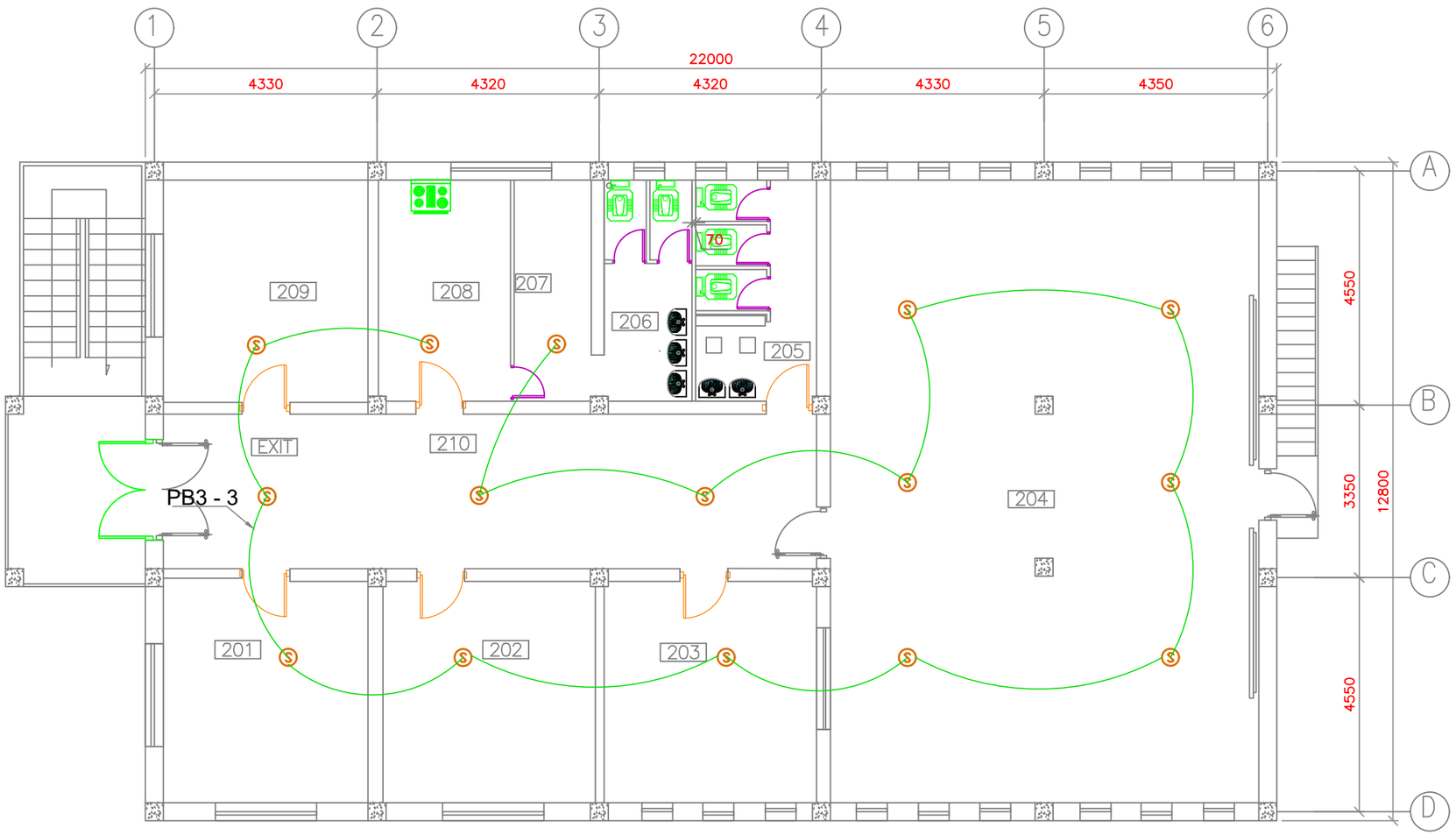

S SINGLE STATION SMOKE ALARM, PHOTO ELECTRIC, 220 VAC, 50 Hz, WITH 9 VDC BATTE`RY BACKUP.

1 / E08 FIRST FLOOR PLAN SMOKE ALARM

SCALE: 1:100

REV No	DESCRIPTION	Date	APPROVED
3	REVISION	05.28.20	XX
2	100% SUBMITTAL		XX
1	FIRST ISSUE		XX

SCAL 1:100

DATE: May 28, 2020
SUBMITTED BY: UNDP/LOTFA
CONTRACT NO.: XX T.O.: 01

DESIGNED BY: Waheullah Azimy
CHECKED BY: Eng. Muslim
APPROVED BY: Ms. Aamaliah Alawaishah

UNITED NATIONS DEVELOPMENT PROGRAM
LOTFA PROJECT AFGHANISTAN
KABUL MOI

ENGINEERING DIVISION
PERs PROJECT

UNDP / LOTFA AFGHANISTAN
KABUL, AFGHANISTAN
BUILDING 02 - PHQ
GROUND FLOOR LIGHTING PLAN

SHEET NUMBER
E08–20

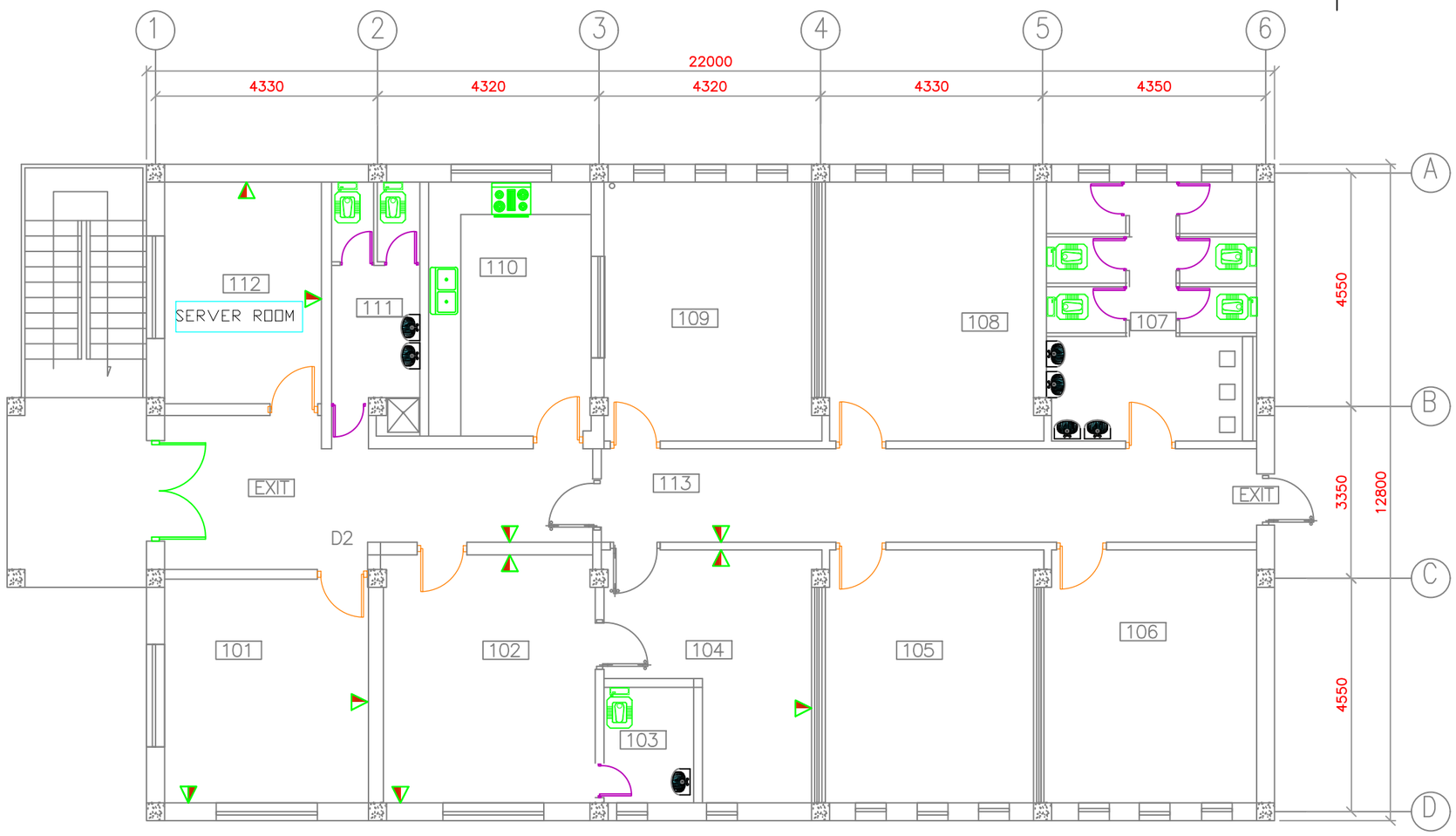

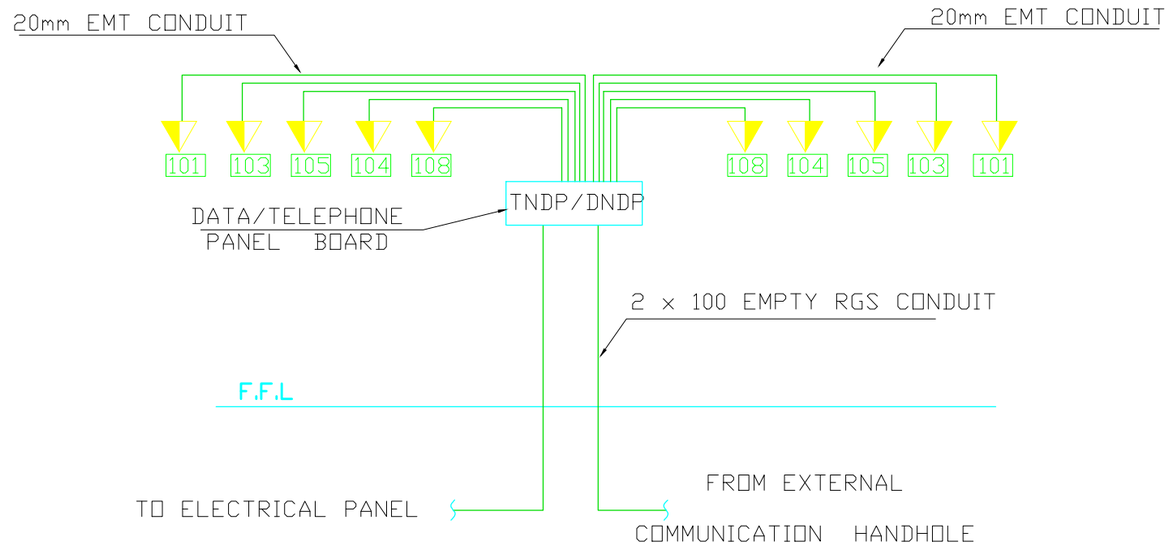

1 / E09

GROUND FLOOR NETWORKING PLAN

SCALE: 1:100

LEGEND	
▼	DUPLEX DATA / TELEPHONE OUTLET, RJ 45, MOUNTING HEIGHT = 450mm ABOVE F.F.L
TNDP/DNDP ▭	TELEPHONE NETWORK DISTRIBUTION PANEL/DATA NETWORK DISTRIBUTION PANEL(DNDP & TNDP).

REV No	DESCRIPTION	Date	APPROVED
3	REVISION	05.28.20	XX
2	100% SUBMITTAL		XX
1	FIRST ISSUE		XX

SCAL 1:100

DESIGNED BY: Waheullah Azimy
CHECKED BY: Eng. Muslim
APPROVED BY: Ms. Aamaliah Alawaishah
DATE: May 28, 2020
SUBMITTED BY: UNDP/LOTFA
CONTRACT NO.: XX
T.O.: 01

UNITED NATIONS DEVELOPMENT PROGRAM
LOTFA PROJECT AFGHANISTAN
KABUL MOI

ENGINEERING DIVISION

PERs PROJECT

UNDP / LOTFA AFGHANISTAN

KABUL, AFGHANISTAN

BUILDING 02 - PHQ
GROUND FLOOR LIGHTING PLAN

SHEET NUMBER
E09–20

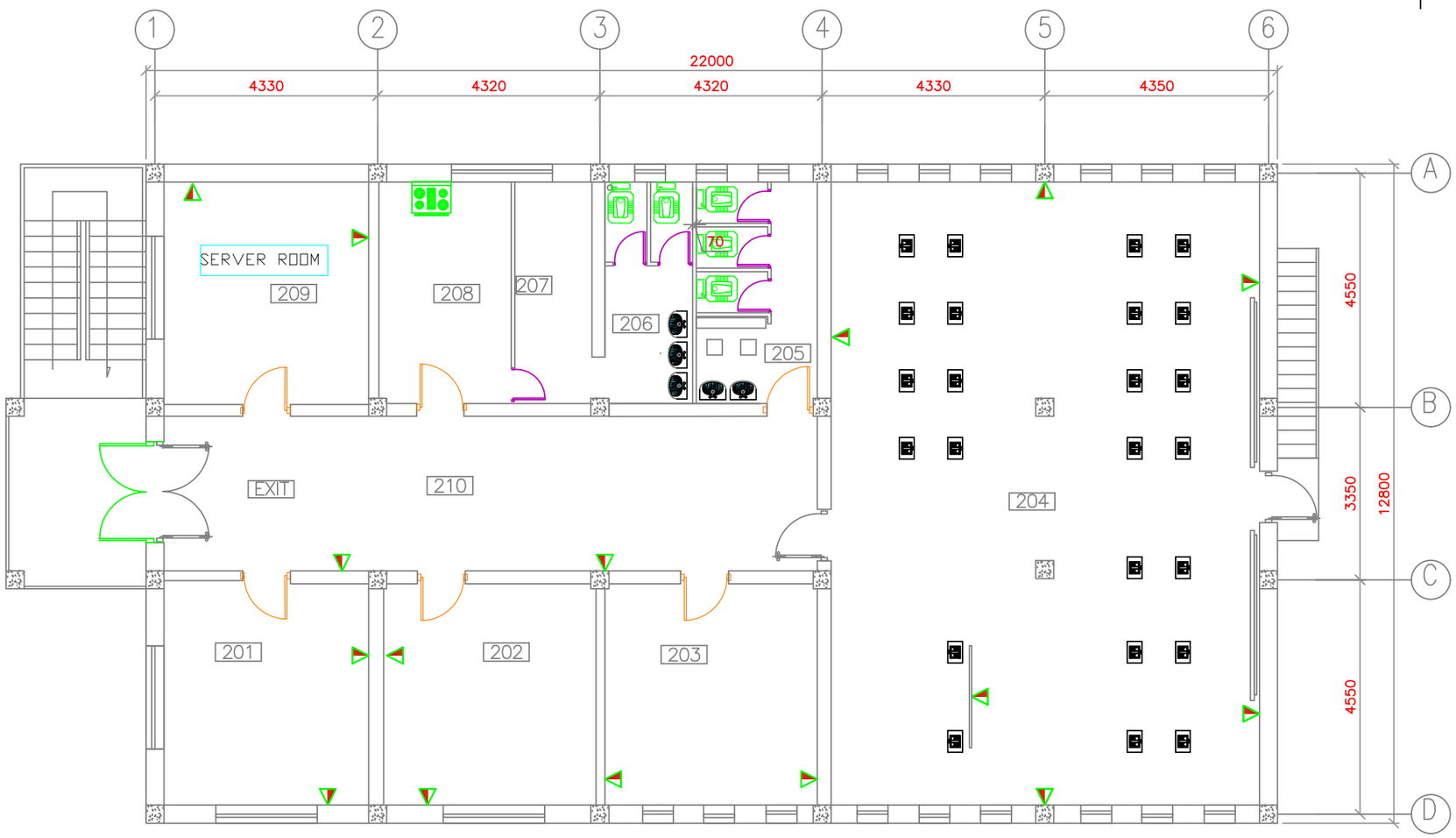

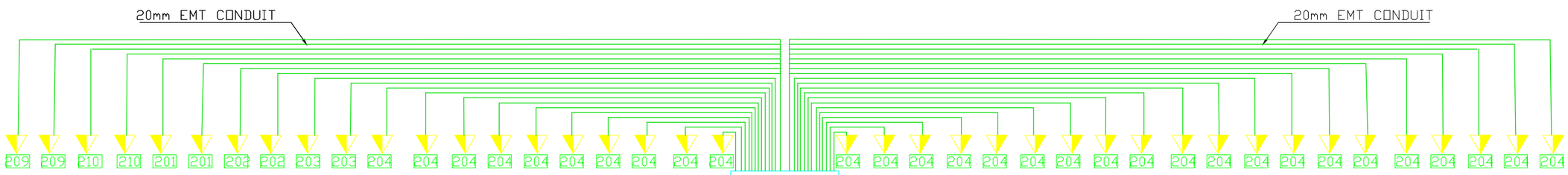

1 / E10 FIRST FLOOR NETWORKING PLAN

SCALE: 1:100

DATA/TELEPHONE PANEL BOARD

TNDP/DNDP

2 x 100 EMPTY RGS CONDUIT

F.F.L

TO ELECTRICAL PANEL

FROM EXTERNAL COMMUNICATION HANDHOLE

LEGEND	
▼	DUPLEX DATA / TELEPHONE OUTLET, RJ 45, MOUNTING HEIGHT = 450mm ABOVE F.F.L
■	DUPLEX DATA / TELEPHONE OUTLET, RJ 45, FLOOR MOUNTED
TNDP/DNDP ▭	TELEPHONE NETWORK DISTRIBUTION PANEL/DATA NETWORK DISTRIBUTION PANEL(DNDP & TNDP).

REV No.	DESCRIPTION	Date	APPROVED
3	REVISION	05.28.20	XX
2	100% SUBMITTAL		XX
1	FIRST ISSUE		XX

SCAL 1:100

DATE: May 28, 2020
SUBMITTED BY: UNDP/LOTFA
CONTRACT NO.: XX
T.O.: 01

DESIGNED BY: Waheduddin Azimy
CHECKED BY: Eng. Muslim
APPROVED BY: Ms. Aamaliah Alawaishah

UNITED NATIONS DEVELOPMENT PROGRAM
LOTFA PROJECT AFGHANISTAN
KABUL MOI

ENGINEERING DIVISION

PERs PROJECT

UNDP / LOTFA AFGHANISTAN

KABUL, AFGHANISTAN

BUILDING 02 - PHQ
GROUND FLOOR LIGHTING PLAN

SHEET NUMBER
E10–20

PANEL BOARD NAME : PB1
BREAKERS TYPES: RCCB & ELCB

MAIN BREAKER : 100A
220/380 VOLT , 3 PHASE , 5 WIRE , 50HZ

BUS BAR RATE : 160A
30KA ISC / 0.5 SEC

SURFACE MOUNTED NEMA ENCLOS

WIRE ,CONDUIT DESCRIPTION			PHASE			TRIP & CIRCUIT						PHASE			WIRE ,CONDUITD ESC		
WIRE AND CONDUIT	GND WIRE	DESCRIPTION	A (W)	B (W)	C (W)	AMP	POLE	CKT	CKT	POLE	AMP	A (W)	B (W)	C (W)	DESCRIPTION	GND WIRE	WIRE AND CONDUIT
2(1cX2.5mm²)Ø20mm	2.5mm²	LIGHTING	500			20	1	1	2	1	20	500			LIGHTING	2.5mm²	2(1cX2.5mm²)Ø20mm
2(1cX2.5mm²)Ø20mm	2.5mm²	SMOKE ALARM		150		20	1	3	4	1	20		500		LIGHTING	2.5mm²	2(1cX2.5mm²)Ø20mm
2(1cX4mm²)Ø20mm	4mm²	RECEPTACLE			720	25	1	5	6	1	25			720	RECEPTACLE	4mm²	2(1cX4mm²)Ø20mm
2(1cX4mm²)Ø20mm	4mm²	RECEPTACLE	900			25	1	7	8	1	25	900			RECEPTACLE	4mm²	2(1cX4mm²)Ø20mm
2(1cX4mm²)Ø20mm	4mm²	RECEPTACLE		900		25	1	9	10	1	25		900		RECEPTACLE	4mm²	2(1cX4mm²)Ø20mm
2(1cX4mm²)Ø20mm	4mm²	RECEPTACLE			900	25	1	11	12	1	25			720	RECEPTACLE	4mm²	2(1cX4mm²)Ø20mm
2(1cX4mm²)Ø20mm	4mm²	WATER HEATER	1400			25	1	13	14	1	25	720			RECEPTACLE	4mm²	2(1cX4mm²)Ø20mm
2(1cX4mm²)Ø20mm	4mm²	RECEPTACLE		900		25	1	15	16	1	25		1500		W. HEATER	4mm²	2(1cX4mm²)Ø20mm
2(1cX4mm²)Ø20mm	4mm²	WATER HEATER			1650	25	1	17	18	1	25			1650	W. HEATER	4mm²	2(1cX4mm²)Ø20mm
2(1cX4mm²)Ø20mm	4mm²	Exhaust Fans and Fans	500			32	1	19	20	1	32	500			Exhaust Fans and Fans	4mm²	2(1cX4mm²)Ø20mm
2(1cX4mm²)Ø20mm	4mm²	AC Split Unit		2000		32	1	21	22	1	32		1500		AC Split Unit	4mm²	2(1cX4mm²)Ø20mm
2(1cX4mm²)Ø20mm	4mm²	AC Split Unit			2000	32	1	23	24	1	32			2000	AC Split Unit	4mm²	2(1cX4mm²)Ø20mm
2(1cX4mm²)Ø20mm	4mm²	AC Split Unit	1500			32	1	25	26	1	32	1500			AC Split Unit	4mm²	2(1cX4mm²)Ø20mm
2(1cX4mm²)Ø20mm	4mm²	AC Split Unit		2000		32	1	27	28	1	32		-		SPARE	-	-
		SPARE			-	32	1	29	30	1	32			–	SPARE	-	-
		-	-			-		31	32	1	32	1500			AC Split Unit	4mm²	2(1cX4mm²)Ø20mm
		SPARE		-		40	3	33	34	1	32		-		SPARE	-	-
		-			–	-		35	36	1	32			–	SPARE	–	–
SUB TOTAL = (w)			4800	5950	5270							5620	4400	5090			
SUB TOTAL = (VA)			6000	7438	6588							7025	5500	6363			

	VA	A
TOTAL PHASE (A) =	13025.0	59.20
TOTAL PHASE (B) =	12937.5	58.81
TOTAL PHASE (C) =	12950.0	58.86
TOTAL CONNECTED LOAD	38912.5	59.19
DEMAND FACTOR	0.8	
DEMAND LOAD	35021.25	
20% FUTURE	7004.25	
TOTAL LOAD(KVA)	42.03	
TOTAL AMPERE	63.85	

PB1

1(4cX35mm²)Cu INSULATED CABLE +1x16mm² Cu INSULATED GRND CONDUCTOR

1x35mm² BARE COPPER GRND CONDUCTOR

1
E11

Panel Schedule Ground Floor

SCALE: 1:100

REV No	DESCRIPTION	Date	APPROVED
3	REVISION	05.28.20	XX
2	100% SUBMITTAL		XX
1	FIRST ISSUE		XX

SCAL 1:100

DATE: May 28, 2020
SUBMITTED BY: UNOPS/LOTFA
CONTRACT NO.: XX
T.O.: 01

DESIGNED BY: Wahidullah Achmy
CHECKED BY: Eng. Muslim
APPROVED BY: Ms. Aamaliah Alawaishah

UNITED NATIONS DEVELOPMENT PROGRAM
LOTFA PROJECT AFGHANISTAN
KABUL MOI

ENGINEERING DIVISION

PERs PROJECT

UNDP / LOTFA AFGHANISTAN

KABUL, AFGHANISTAN

BUILDING 02 - PHQ
GROUND FLOOR LIGHTING PLAN

SHEET NUMBER
E11–20

PANEL BOARD NAME : PB2
BREAKERS TYPES: RCCB & ELCB

MAIN BREAKER : 40A
220/380 VOLT , 3 PHASE , 5 WIRE , 50HZ

BUS BAR RATE : 100A
30KA ISC / 0.5 SEC

SURFACE MOUNTED NEMA ENCLOSURE,

WIRE ,CONDUIT DESCRIPTION			PHASE			TRIP & CIRCUIT						PHASE			WIRE ,CONDUITD ESCRIPTI		
WIRE AND CONDUIT	GND WIRE	DESCRIPTION	A (W)	B (W)	C (W)	AMP	POLE	CKT	CKT	POLE	AMP	A (W)	B (W)	C (W)	DESCRIPTION	GND WIRE	WIRE AND CONDUIT
2(1cX2.5mm²)Ø20mm	2.5mm²	LIGHTING	200			20	1	1	2	1	20	200			LIGHTING	2.5mm²	2(1cX2.5mm²)Ø20mm
2(1cX2.5mm²)Ø20mm	2.5mm²	SMOKE ALARM		100		20	1	3	4	1	20		500		RECEPTACLE	4mm²	2(1cX4mm²)Ø20mm
2(1cX4mm²)Ø20mm	4mm²	RECEPTACLE			400	20	1	5	6	1	20			200	IT EQUIPMENT	4mm²	2(1cX4mm²)Ø20mm
2(1cX4mm²)Ø20mm	4mm²	IT EQUIPMENT	250			20	1	7	8	1	20	250			IT EQUIPMENT	4mm²	2(1cX4mm²)Ø20mm
2(1cX4mm²)Ø20mm	4mm²	IT EQUIPMENT		150		20	1	9	10	1	20		150		IT EQUIPMENT	4mm²	2(1cX4mm²)Ø20mm
2(1cX4mm²)Ø20mm	4mm²	IT EQUIPMENT			150	20	1	11	12	1	20			150	IT EQUIPMENT	4mm²	2(1cX4mm²)Ø20mm
-	-	SPARE	-			25	1	13	14	1	25	–			SPARE	-	-
-	-	SPARE		-		25	1	15	16	1	25		-		SPARE	-	-
-	-	SPARE			-	25	1	17	18	1	25			-	SPARE	-	-
-	-	-	-			-	-	19	20	1	25	-			SPARE	-	-
-	-	SPARE		-		20	3	21	22	1	25		–		SPARE	-	-
-	-	-			–	-	-	23	24	1	25			–	SPARE	-	-
SUB TOTAL = (w)			450	250	550							450	650	350			
SUB TOTAL = (VA)			563 VA	313 A	688							563	813	438			

TOTAL PHASE (A) =	1125.0	5.11
TOTAL PHASE (B) =	1125.0	5.11
TOTAL PHASE (C) =	1125.0	5.11
TOTAL CONNECTED LOAD	3375.0	5.13
DEMAND FACTOR	0.8	
DEMAND LOAD	3037.50	
20% FUTURE	607.50	
TOTAL LOAD(KVA)	3.65	
TOTAL AMPERE	5.54	

PB2

1(4cX16mm²)Cu INSULATED CABLE +1x10mm² Cu INSULATED GRND CONDUCTOR

1x35mm² BARE COPPER GRND CONDUCTOR

CONDUCTOR INSULATION SHALL BE COLOR CODED AS BELOW :

CONDUCTOR COLOR CODE	
PHASE	COLOR
A	BROWN
B	BLACK
C	GRAY
NEUTRAL	BLUE
GROUND	GREEN / YELLOW

1 / E12 Panel Schedule Ground Floor Solar

SCALE: 1:100

REV No	DESCRIPTION	Date	APPROVED
3	REVISION	05.28.20	XX
2	100% SUBMITTAL		XX
1	FIRST ISSUE		XX

SCAL 1:100

DATE: May.28, 2020
SUBMITTED BY: UNDP/LOTFA
CONTRACT NO.: XX
T.O.: 01

DESIGNED BY: Waheduddin Azimy
CHECKED BY: Eng. Muslim
APPROVED BY: Ms. Aamaliah Alawaishah

UNITED NATIONS DEVELOPMENT PROGRAM
LOTFA PROJECT AFGHANISTAN
KABUL MOI

ENGINEERING DIVISION
PERs PROJECT

UNDP / LOTFA AFGHANISTAN
KABUL, AFGHANISTAN
BUILDING 02 - PHQ
GROUND FLOOR LIGHTING PLAN

SHEET NUMBER
E12–20

PANEL BOARD NAME : PB3 | MAIN BREAKER : 100A | BUS BAR RATE : 160A

BREAKERS TYPES: RCCB & ELCB | 20/380 VOLT , 3 PHASE , 5 WIRE , 50HZ | 30KA ISC / 0.5 SEC | SURFACE MOUNTED NEMA ENCLOSUR

WIRE ,CONDUIT DESCRIPTION			PHASE			TRIP & CIRCUIT						PHASE			WIRE ,CONDUITD ESCI		
WIRE AND CONDUIT	GND WIRE	DESCRIPTION	A (W)	B (W)	C (W)	AMP	POLE	CKT	CKT	POLE	AMP	A (W)	B (W)	C (W)	DESCRIPTION	GND WIRE	WIRE AND CONDUIT
2(1cX2.5mm²)Ø20mm	2.5mm²	LIGHTING	500			20	1	1	2	1	20	500			LIGHTING	2.5mm²	2(1cX2.5mm²)Ø20mm
2(1cX4mm²)Ø20mm	4mm²	LED Projector Security Lighting		600		20	1	3	4	1	20		600		LIGHTING	2.5mm²	2(1cX2.5mm²)Ø20mm
2(1cX2.5mm²)Ø20mm	2.5mm²	LIGHTING			500	20	1	5	6	1	20			720	RECEPTACLE	4mm²	2(1cX4mm²)Ø20mm
2(1cX4mm²)Ø20mm	4mm²	RECEPTACLE	720			20	1	7	8	1	20	720			RECEPTACLE	4mm²	2(1cX4mm²)Ø20mm
2(1cX4mm²)Ø20mm	4mm²	RECEPTACLE		900		25	1	9	10	1	25		900		RECEPTACLE	4mm²	2(1cX4mm²)Ø20mm
2(1cX4mm²)Ø20mm	4mm²	RECEPTACLE			900	25	1	11	12	1	25			1000	Water Heater	4mm²	2(1cX4mm²)Ø20mm
2(1cX4mm²)Ø20mm	4mm²	Water Heater	1000			25	1	13	14	1	25	1000			Water Heater	4mm²	2(1cX4mm²)Ø20mm
2(1cX4mm²)Ø20mm	4mm²	HEATER		1500		25	1	15	16	1	25		1800		Heater	4mm²	2(1cX4mm²)Ø20mm
2(1cX4mm²)Ø20mm	4mm²	Exhaust Fans and Fans			900	25	1	17	18	1	25			300	Exhaust Fans and Fans	4mm²	2(1cX4mm²)Ø20mm
2(1cX4mm²)Ø20mm	4mm²	AC Split Unit	2000			25	1	19	20	1	25	2000			AC Split Unit	4mm²	2(1cX4mm²)Ø20mm
2(1cX4mm²)Ø20mm	4mm²	AC Split Unit		2000		25	1	21	22	1	25		2000		AC Split Unit	4mm²	2(1cX4mm²)Ø20mm
2(1cX4mm²)Ø20mm	4mm²	AC Split Unit			2000	25	1	23	24	1	25			2000	AC Split Unit	4mm²	2(1cX4mm²)Ø20mm
2(1cX4mm²)Ø20mm	4mm²	AC Split Unit	2000			32	1	25	26	1	32	-			SPARE	-	-
-	-	SPARE		-		32	1	27	28	1	32		-		SPARE	-	-
–	–	SPARE			-	32	1	29	30	1	32			2000	AC Split Unit	4mm²	2(1cX4mm²)Ø20mm
-	-	SPARE	-			32	1	31	32	-	-	4440			-	-	-
-	-	SPARE		-		32	1	33	34	3	63		4440		PB4	10mm²	4(1cX16mm²)Ø50mm
–	–	SPARE			–	32	1	35	36	-	-			4440	-	–	–
SUB TOTAL = (w)			6220	5000	4300							8660	9740	10460			
SUB TOTAL = (VA)			7775	6250	5375							10825	12175	13075			

	VA	A
TOTAL PHASE (A) =	18600.0	84.55
TOTAL PHASE (B) =	18425.0	83.75
TOTAL PHASE (C) =	18450.0	83.86
TOTAL CONNECTED LOAD	55475.0	84.39
DEMAND FACTOR	0.8	
DEMAND LOAD	49927.50	
20% FUTURE	9985.50	
TOTAL LOAD(KVA)	59.91	
TOTAL AMPERE	91.03	

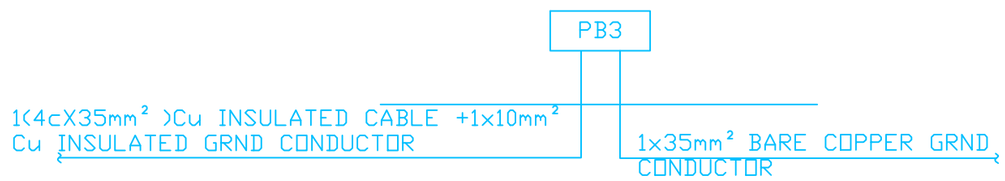

1 / E13 Panel Schedule FIRST Floor

SCALE: 1:100

REV No	DESCRIPTION	Date	APPROVED
3	REVISION	05.28.20	XX
2	100% SUBMITTAL		XX
1	FIRST ISSUE		XX

SCAL 1:100

DATE: May 28, 2020
SUBMITTED BY: UNDP/LOTFA
CONTRACT NO.: XX
T.O.: 01
DESIGNED BY: Waheduddin Azimy
CHECKED BY: Eng. Muslim
APPROVED BY: Ms. Aamaliah Alawaishah

UNITED NATIONS DEVELOPMENT PROGRAM
LOTFA PROJECT AFGHANISTAN
KABUL MOI

ENGINEERING DIVISION
PERs PROJECT

UNDP / LOTFA AFGHANISTAN
KABUL, AFGHANISTAN
BUILDING 02 - PHQ
GROUND FLOOR LIGHTING PLAN

SHEET NUMBER
E13–20

PANEL BOARD NAME : PB4
BREAKERS TYPES: RCCB & ELCB

MAIN BREAKER : 63A
220/380 VOLT , 3 PHASE , 5 WIRE , 50HZ

BUS BAR RATE : 100A
30KA ISC / 0.5 SEC

SURFACE MOUNTED NEMA ENCLOSU

WIRE ,CONDUIT DESCRIPTION			PHASE			TRIP & CIRCUIT						PHASE			WIRE ,CONDUITD ESCR		
WIRE AND CONDUIT	GND WIRE	DESCRIPTION	A (W)	B (W)	C (W)	AMP	POLE	CKT	CKT	POLE	AMP	A (W)	B (W)	C (W)	DESCRIPTION	GND WIRE	WIRE AND CONDUIT
2(1cX4mm²)Ø20mm	4mm²	LIGHTING	200			20	1	1	2	1	20	200			LIGHTING	4mm²	2(1cX4mm²)Ø20mm
2(1cX4mm²)Ø20mm	4mm²	SMOKE ALARM		100		20	1	3	4	1	20		500		RECEPTACLE	4mm²	2(1cX4mm²)Ø20mm
2(1cX4mm²)Ø20mm	4mm²	RECEPTACLE			800	20	1	5	6	1	20			1000	RECEPTACLE	4mm²	2(1cX4mm²)Ø20mm
2(1cX4mm²)Ø20mm	4mm²	RECEPTACLE	800			20	1	7	8	1	20	1000			RECEPTACLE	4mm²	2(1cX4mm²)Ø20mm
2(1cX4mm²)Ø20mm	4mm²	RECEPTACLE		600		20	1	9	10	1	20		400		RECEPTACLE	4mm²	2(1cX4mm²)Ø20mm
2(1cX4mm²)Ø20mm	4mm²	IT EQUIPMENT			190	20	1	11	12	1	20			190	IT EQUIPMENT	4mm²	2(1cX4mm²)Ø20mm
2(1cX4mm²)Ø20mm	4mm²	IT EQUIPMENT	100			25	1	13	14	1	25	100			IT EQUIPMENT	4mm²	2(1cX4mm²)Ø20mm
2(1cX4mm²)Ø20mm	4mm²	IT EQUIPMENT		400		25	1	15	16	1	25		400		IT EQUIPMENT	4mm²	2(1cX4mm²)Ø20mm
2(1cX4mm²)Ø20mm	4mm²	IT EQUIPMENT			100	25	1	17	18	1	25			100	IT EQUIPMENT	4mm²	2(1cX4mm²)Ø20mm
-	-	-	1125			-	-	19	20	1	25	–			SPARE	-	-
4(1cX10mm²)Ø50mm	10mm²	PB2		1125		40	3	21	22	1	25		–		SPARE	-	-
-	-	-			1125	-	-	23	24	1	25			–	SPARE	-	-
SUB TOTAL = (w)			2225	2225	2215							1300	1300	1290			
SUB TOTAL = (VA)			2781	2781	2769							1625	1625	1613			

	VA	A
TOTAL PHASE (A) =	4406.3	20.03
TOTAL PHASE (B) =	4406.3	20.03
TOTAL PHASE (C) =	4381.3	19.91
TOTAL CONNECTED LOAD	13193.8	20.07
DEMAND FACTOR	0.8	
DEMAND LOAD	11874.38	
20% FUTURE	2374.88	
TOTAL LOAD(KVA)	14.25	
TOTAL AMPERE	21.65	

PB4

4(1cX16mm²)Cu INSULATED CABLE +1x10mm² Cu INSULATED GRND CONDUCTOR

1x35mm² BARE COPPER GRND CONDUCTOR

CONDUCTOR INSULATION SHALL BE COLOR CODED AS BELOW :

CONDUCTOR COLOR CODE	
PHASE	COLOR
A	BROWN
B	BLACK
C	GRAY
NEUTRAL	BLUE
GROUND	GREEN / YELLOW

1 / E14 Panel Schedule First Floor Solar

SCALE: 1:100

REV No	DESCRIPTION	Date	APPROVED
3	REVISION	05.28.20	XX
2	100% SUBMITTAL		XX
1	FIRST ISSUE		XX

SCAL 1:100

DATE: May.28, 2020
DESIGNED BY: Waheduddin Achmy
CHECKED BY: Eng. Muslim
SUBMITTED BY: UNDP/LOTFA
APPROVED BY: Ms. Aamaliah Alawaishah
CONTRACT NO.: XX
T.O.: 01

UNITED NATIONS DEVELOPMENT PROGRAM
LOTFA PROJECT AFGHANISTAN
KABUL MOI

ENGINEERING DIVISION
PERs PROJECT

UNDP / LOTFA AFGHANISTAN
KABUL, AFGHANISTAN
BUILDING 02 - PHQ
GROUND FLOOR LIGHTING PLAN

SHEET NUMBER
E14–20

PANEL BOARD NAME : MPB
BREAKERS TYPES: ELCB

MAIN BREAKER : 250A
220/380 VOLT , 3 PHASE , 5 WIRE , 50HZ

BUS BAR RATE :400A
36KA ISC / 0.5 SEC

WALL MOUNTED NEMA ENCLOSURE, T

WIRE ,CONDUIT DESCRIPTION			PHASE			TRIP & CIRCUIT						PHASE			WIRE ,CONDUITD ESCRI		
WIRE AND CONDUIT	GND WIRE	BUILDING	A (KVA)	B (KVA)	C (KVA)	AMP	POLE	CKT	CKT	POLE	AMP	A (KVA)	B (KVA)	C (KVA)	BUILDING	GND WIRE	WIRE AND CONDUIT
1(4cX35mm²)Ø1x50mm	1x10mm²	GROUND FLOOR	13.00			125	3	1	2	3	50	1.25			GROUND FLOOR	1x10mm²	1(4cX16mm²)Ø1x50mm
				13.00									1.25				
					13.00									1.25			
1(4cX35mm²)Ø1x50mm	1X10 mm²	FIRST FLOOR	14.00			125	3	3	4	3	63	4.40			FIRST FLOOR	1x10mm²	1(4cX16mm²)Ø1x50mm
				14.00									4.40				
					14.00									4.40			
1(4cX35mm²)Ø1x50mm	1X10 mm²	SECOND FLOOR	13.00			63	3	5	6	3	63	–			SPARE	1x10mm²	1(4cX35mm²)Ø1x50mm
				13.00									–				
					13.00									–			
1(4cX35mm²)Ø1x50mm	1X10 mm²	SPARE	–			63	3	7	8	3	63	–			SAPRE	1x10mm²	1(4cX35mm²)Ø1x50mm
				–									–				
					–									–			
SUB TOTAL = (KVA)			40.00	40.00	40.00							5.65	5.65	5.65			

TOTAL PHASE (A) =	45.7	198.48
TOTAL PHASE (B) =	45.7	198.48
TOTAL PHASE (C) =	45.7	198.48
TOTAL CONNECTED LOAD	137.0	197.68
DEMAND FACTOR	0.9	
DIVERSITY FACTOR	1.3	
DEMAND LOAD	94.8	
20% FUTURE	19.0	
TOTAL LOAD(KVA)	113.77	
TOTAL AMPERE	164.41	

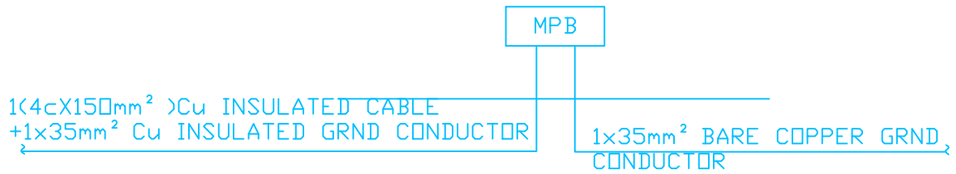

CONDUCTOR INSULATION SHALL BE COLOR CODED AS BELOW :

CONDUCTOR COLOR CODE	
PHASE	COLOR
A	BROWN
B	BLACK
C	GRAY
NEUTRAL	BLUE
GROUND	GREEN / YELLOW

1 / E15 MPB Panel Schedule Ground Floor

SCALE: 1:100

REV No	DESCRIPTION	Date	APPROVED
3	REVISION	05.28.20	XX
2	100% SUBMITTAL		XX
1	FIRST ISSUE		XX

SCAL 1:100

DATE: May 28, 2020
DESIGNED BY: Wahidullah Achmy
CHECKED BY: Eng. Muslim
SUBMITTED BY: UNDP/LOTFA
APPROVED BY: Ms. Aamaliah Alawaishah
CONTRACT NO.: XX
T.O. : 01

UNITED NATIONS DEVELOPMENT PROGRAM
LOTFA PROJECT AFGHANISTAN
KABUL MOI

ENGINEERING DIVISION
PERs PROJECT

UNDP / LOTFA AFGHANISTAN
KABUL, AFGHANISTAN
BUILDING 02 - PHQ
GROUND FLOOR LIGHTING PLAN

SHEET NUMBER
E15–20

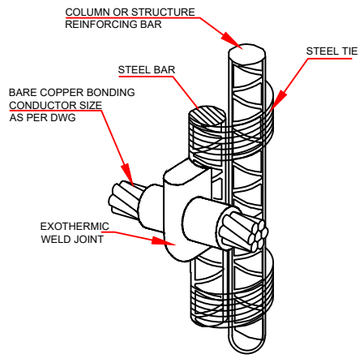

01 WELDING TO STEEL REINFORCING BAR
REF. SCALE N.T.S

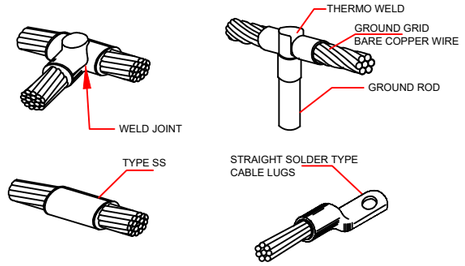

02 GROUNDING CABLE LUGS
T-CONNECTION/HORIZONATAL SPLICE
REF. SCALE N.T.S

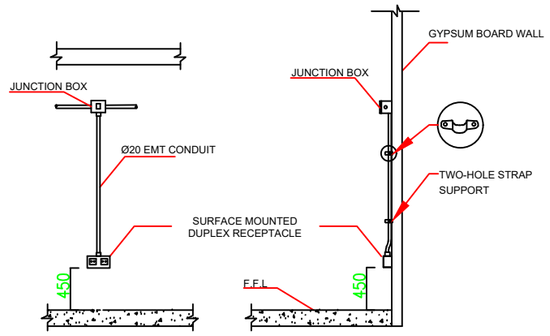

03 INSTALLATION DETAIL OF
SURFACE MOUNTED DUPLEX RECEPTACLE
REF. SCALE N.T.S

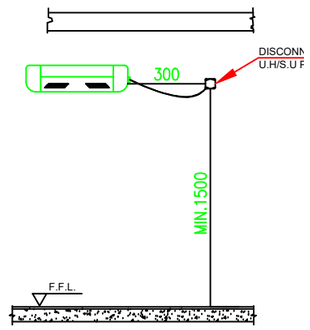

04 DISCONNECT SWITCH
INSTALLATION DETAIL
REF. SCALE N.T.S

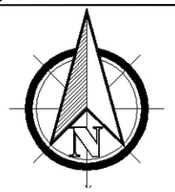

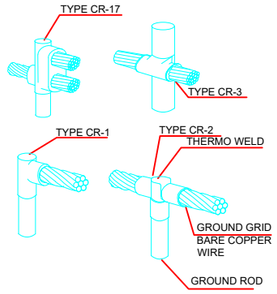

05 CABLE TO GROUND ROD CONNECTION
REF. SCALE N.T.S

NOTE:
USE OF A LISTED GROUNDING CLIP
TO ATTACH A GROUNDING
CONDUCTOR TO A METAL BOX

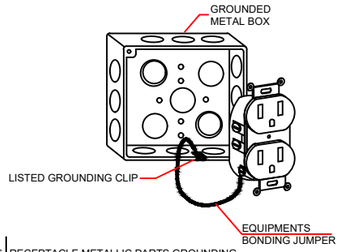

06 RECEPTACLE METALLIC PARTS GROUNDING
REF. SCALE N.T.S

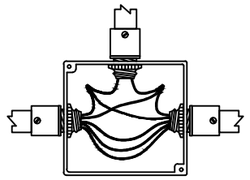

07 TYPICAL CONNECTION OF
WIRES IN JUNCTION BOX
REF. SCALE N.T.S

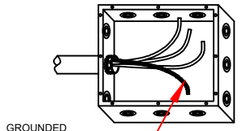

08 FIELD APPLIED IDENTIFICATION
REF. SCALE N.T.S

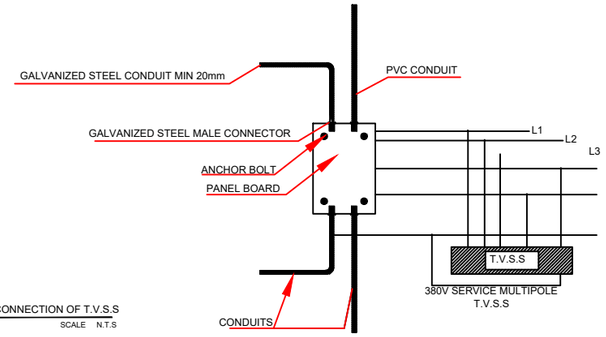

09 TYPICAL CONNECTION OF T.V.S.S
REF. SCALE N.T.S

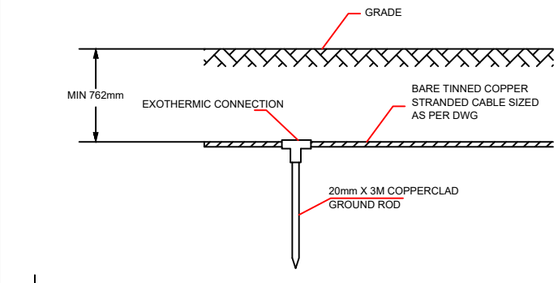

10 TYPICAL GROUND ROD DETAIL-ELEVATION
REF. SCALE N.T.S

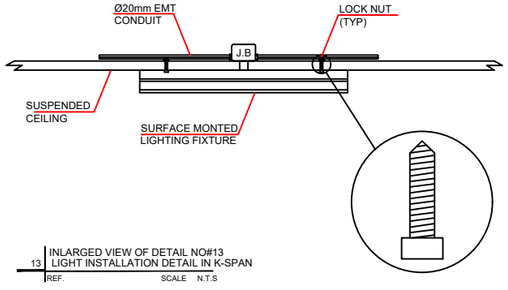

13 INLARGED VIEW OF DETAIL NO#13
LIGHT INSTALLATION DETAIL IN K-SPAN
REF. SCALE N.T.S

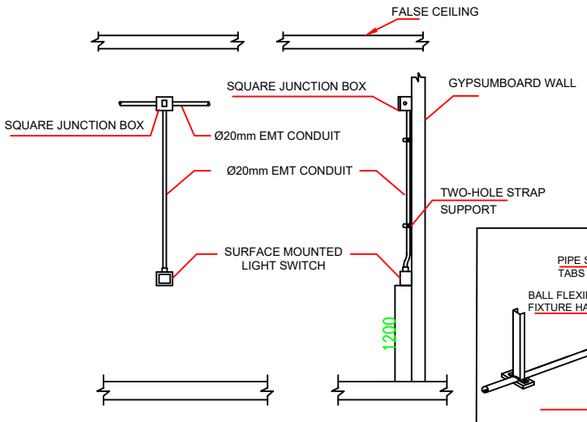

03 LIGHTING SWITCH INSTALLATION &
REF. SCALE N.T.S

1
E16

ELECTRICAL INSTALLATION DETAILS

SCALE: 1:100

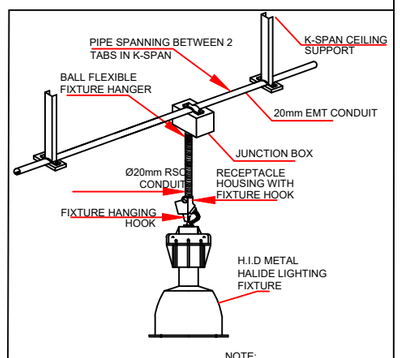

NOTE:
NOT USED IN THIS BUILDING.

14 METAL HALIDE HID TYPE(A&B)
INSTALLATION DETAILS
REF. SCALE N.T.S

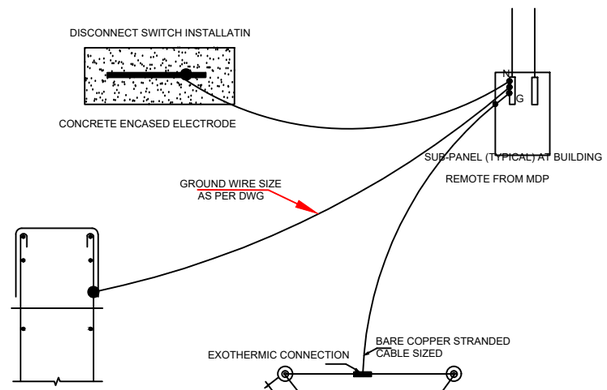

NEUTRAL BUS OR CONDUCTOR

GND BUS, CONDUCTOR, PANEL OR FRAME

GROUND ROD. CU-CLAD STEEL. 20 mm DIAMETER, 3M LOAG
PHASE CONDUCTORS AND BREAKERS NOT SHOWN
CONTACT AED-N (TAN) ENGINEERING FOR SPECIFIC
CONDUCTOR SIZES OR ANY CLARIFICATIONS

15 TYPICAL GROUNDING DETAIL-PLAN
REF. SCALE N.T.S

REV No.	DESCRIPTION	Date	APPROVED
3	REVISION	05.28.20	XX
2	100% SUBMITTAL		XX
1	FIRST ISSUE		XX

SCAL 1:100

DATE: May 28, 2020
DESIGNED BY: Waheullah Azimy
SUBMITTED BY: UNOPS/LOTFA
CHECKED BY: Eng. Muslim
CONTRACT NO.: XX
T.O.: 01
APPROVED BY: Ms. Aamaliah Alawaishah

UNITED NATIONS DEVELOPMENT PROGRAM
LOTFA PROJECT AFGHANISTAN
KABUL MOI

ENGINEERING DIVISION
PERs PROJECT

UNDP / LOTFA AFGHANISTAN
KABUL, AFGHANISTAN
BUILDING 02 - PHQ
GROUND FLOOR LIGHTING PLAN

SHEET NUMBER
E16–20

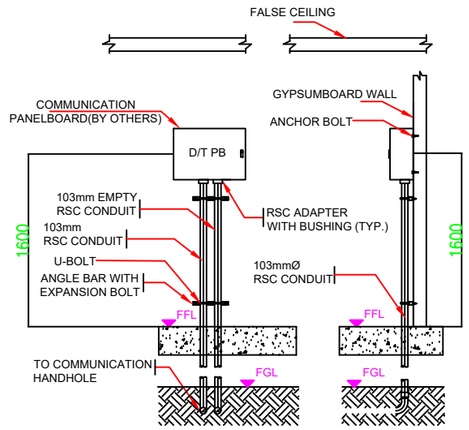

01 COMMUNICATION PANEL BOARD DETAIL
REF. SCALE N.T.S

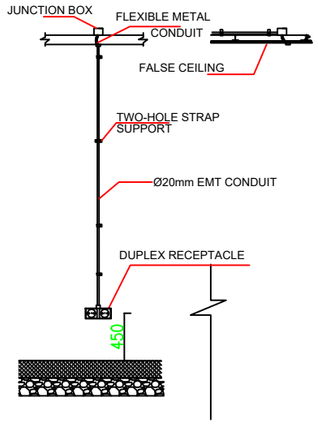

02 RECEPTACLE INSTALLATION DETAIL
REF. SCALE N.T.S

NOTE:- ALL DIMENSIONS ARE IN MILIMETER

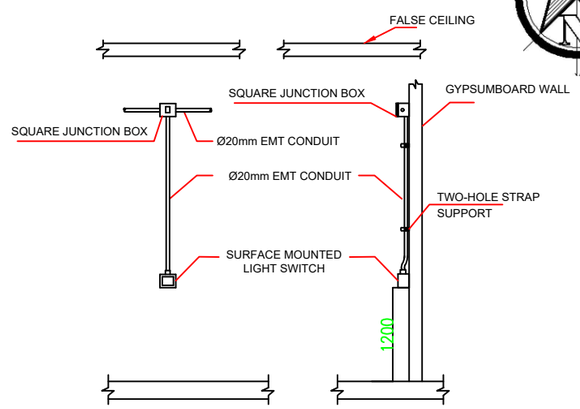

03 LIGHTING SWITCH INSTALLATION & MOUNTING HEIGHT DETAIL IN CMU WAL
REF. SCALE N.T.S

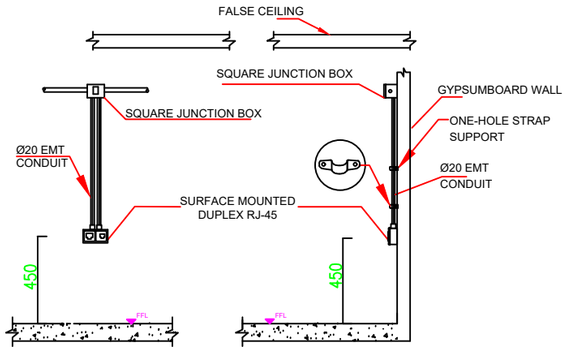

04 COMMUNICATION RECEPTACLE INSTALLATION DETAIL
REF. SCALE N.T.S

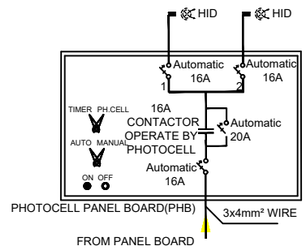

05 PHOTOCELL CONTROLLER DETAIL FOR EXTERIOR METAL HALIDE HID TYPE(C)
REF. SCALE N.T.S

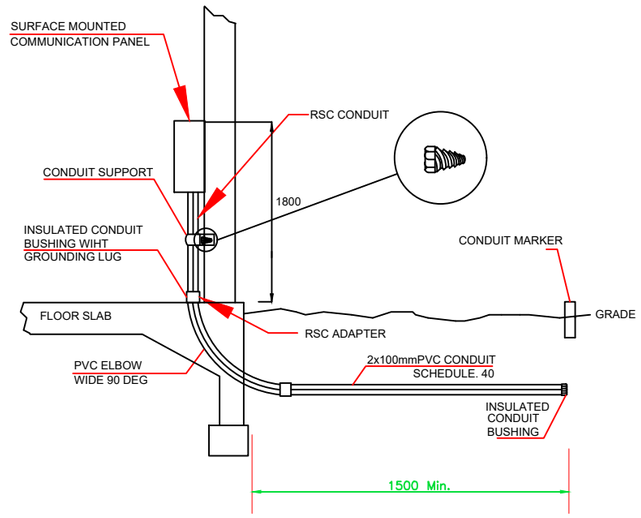

06 COMMUNICATION SERVICE ENTRANCE DETAIL
REF. SCALE N.T.S

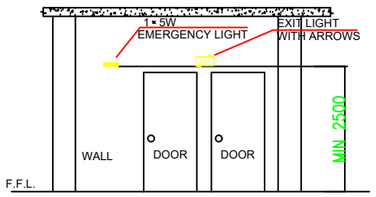

07 SURFACE EGRESS LIGHT FIXTURE DETAIL
REF. SCALE N.T.S

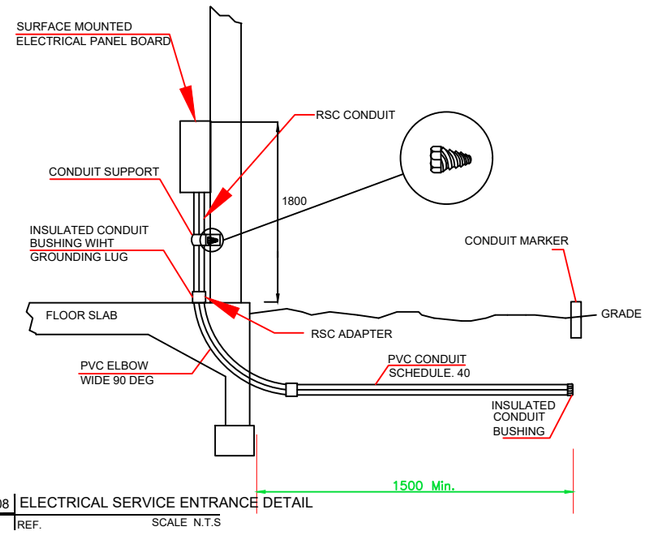

08 ELECTRICAL SERVICE ENTRANCE DETAIL
REF. SCALE N.T.S

1 / E17 ELECTRICAL INSTALLATION DETAILS
SCALE: 1:100

REV No.	DESCRIPTION	Date
3	REVISION	XX
2	100% SUBMITTAL	05.28.20
1	FIRST ISSUE	XX
		XX APPROVED

SCAL 1:100

DATE: May 28, 2020
SUBMITTED BY: UNOPS/LOTFA
CONTRACT NO.: XX T.O.: 01
DESIGNED BY: Wahidullah Achmy
CHECKED BY: Eng. Muslim
APPROVED BY: Ms. Aamaliah Alawaishah

UNITED NATIONS DEVELOPMENT PROGRAM
LOTFA PROJECT AFGHANISTAN
KABUL MOI

ENGINEERING DIVISION
PERs PROJECT

UNDP / LOTFA AFGHANISTAN
KABUL, AFGHANISTAN
BUILDING 02 - PHQ
GROUND FLOOR LIGHTING PLAN

SHEET NUMBER
E17–20

1 TYPE E1
EXIT LIGHT

E1

1x5WATT

WALL MOUNTED EMERGENCY EXIT LIGHT FIXTURE,SINGE SIDED WITH SELF CONTAINED NICKEL-CADMIUM BATTERY PACK TO OPERATE ON STAND-BY CIRCUIT FOR 90 MINUTES

2 TYPE E2
EXIT LIGHT

NOTE: NOT USED IN THIS BUILDING

E2

1x5WATT

DOUBLE FACED WALL MOUNTED EMERGENCY EXIT LIGHT FIXTURE, DOUBLE SIDED WITH SELF CONTAINED NICKEL-CADMIUM BATTERY PACK TO OPERATE ON STAND-BY CIRCUIT FOR 90 MINUTES

3 TYPE M3
ABOVE MIRROR LIGHT

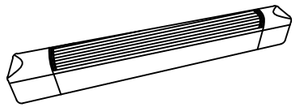

1X18 WATT

ABOVE MIRROR LIGHTING FIXTURE EQUIPPED WITH 18W

4 TYPE M6
WEATERPROOF FLUORASCENT LIGHTING FIXTURE

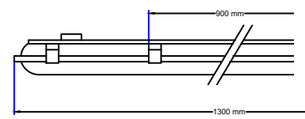

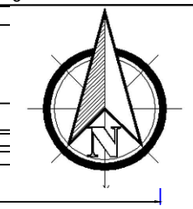

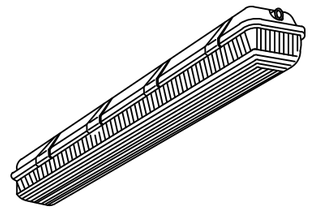

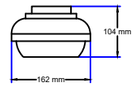

2x36WATT

M6

SURFACE MOUNTED WATERPROOF LIGHTING FIXTURES EQUIPPED WITH FLUORESCENT LAMP AND ELECTRONIC BALLAST

5 TYPE M2
FLUORSCENT LIGHTING FIXTURE

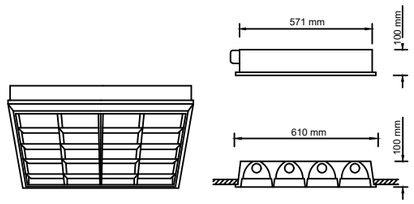

4x18 WATT

M2

(60x60)mm, RECESSED MOUNTED LIGHTING FIXTURES EQUIPPED WITH FLUORESCENT LAMPS AND ELECTRONIC BALLAST

6 TYPE M2
FLUORSCENT WATER PROOF LIGHTING FIXTURE

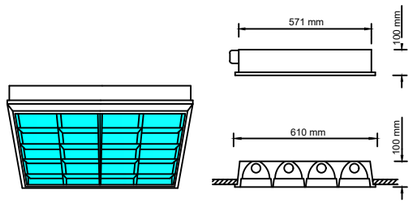

4x18 WATT

M2

(60x60)mm, RECESSED MOUNTED WATER PROOF LIGHTING FIXTURES EQUIPPED WITH FLUORESCENT LAMPS AND ELECTRONIC BALLAST

8 TYPE GFCI
DUPLEX RECEPTACLE GFCI

NOTE: NOT USED IN THIS BUILDING

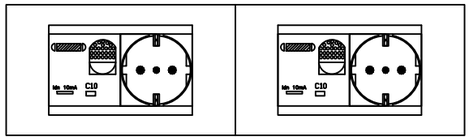

GFCI

DUPLEX RECEPTACLE GFCI, 220V, 50Hz, 30A

8 TYPE
DATA / TELEPHONE OUTLET

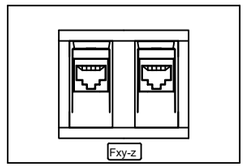

DUPLEX RJ-45, DATA / TELEPHONE NETWORK OUTLET

9 SINGLE POWER RECEPTACLE

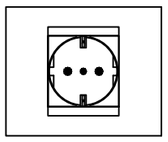

SURFACE MOUNTED SINGLE POWER RECEPTACLE 1PH , 220V, 30A, 50Hz, GROUNDING DIN TYPE MOUNTING HEIGHT AS PER SPLIT UNIT INSTALLATION .

10 DUPLEX RECEPTACLE

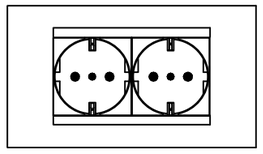

SURFACE MOUNTED DUPLEX RECEPTACLE 1PH. 220V, 20A, 50Hz, GROUNDING DIN TYPE MOUNTING HEIGHT = 450mm A.F.F.

11 FLOOD LIGHT

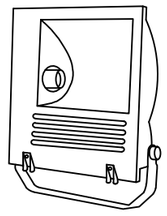

182 X 267mm, 400W METAL HALIDE FLOODLIGHT, WALL OR POLE MOUNTED,PHOTOCELL CONTROLLED.

12 TYPE M3
HIGH CEILING LIGHTING FIXTURE

NOTE: NOT USED IN THIS BUILDING

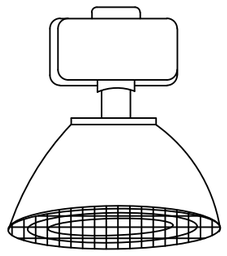

A 1x165 WATT

B 1x250 WATT

HIGH CEILING LIGHTING FIXTURE WITH 250W METAL HALIDE LAMP, EQUIPPED WITH WIRE GUARD

1 / E18 ELECTRICAL INSTALLATION DETAILS

SCALE: 1:100

REV No.	DESCRIPTION	Date	APPROVED
3	REVISION	05.28.20	XX
2	100% SUBMITTAL		XX
1	FIRST ISSUE		XX

SCAL 1:100

DATE: May.28, 2020

DESIGNED BY: Wahidullah Achmy

SUBMITTED BY: UNDP/LOTFA

CHECKED BY: Eng. Muslim

CONTRACT NO.: XX T.O. : 01

APPROVED BY: Ms. Aamaliah Alawaishah

UNITED NATIONS DEVELOPMENT PROGRAM
LOTFA PROJECT AFGHANISTAN
KABUL MOI

ENGINEERING DIVISION

PERs PROJECT

UNDP / LOTFA AFGHANISTAN

KABUL, AFGHANISTAN

BUILDING 02 - PHQ
GROUND FLOOR LIGHTING PLAN

SHEET NUMBER

E18–20

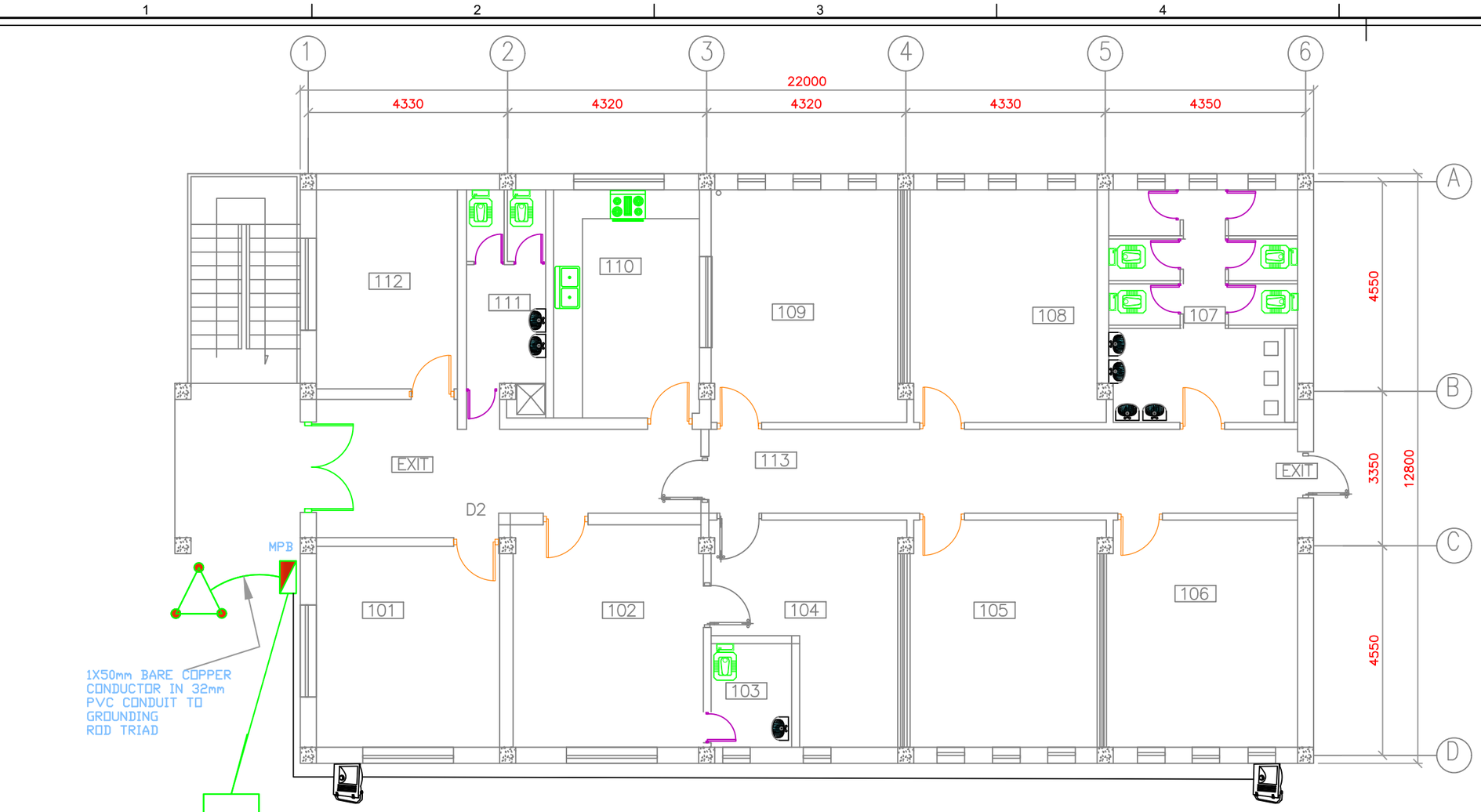

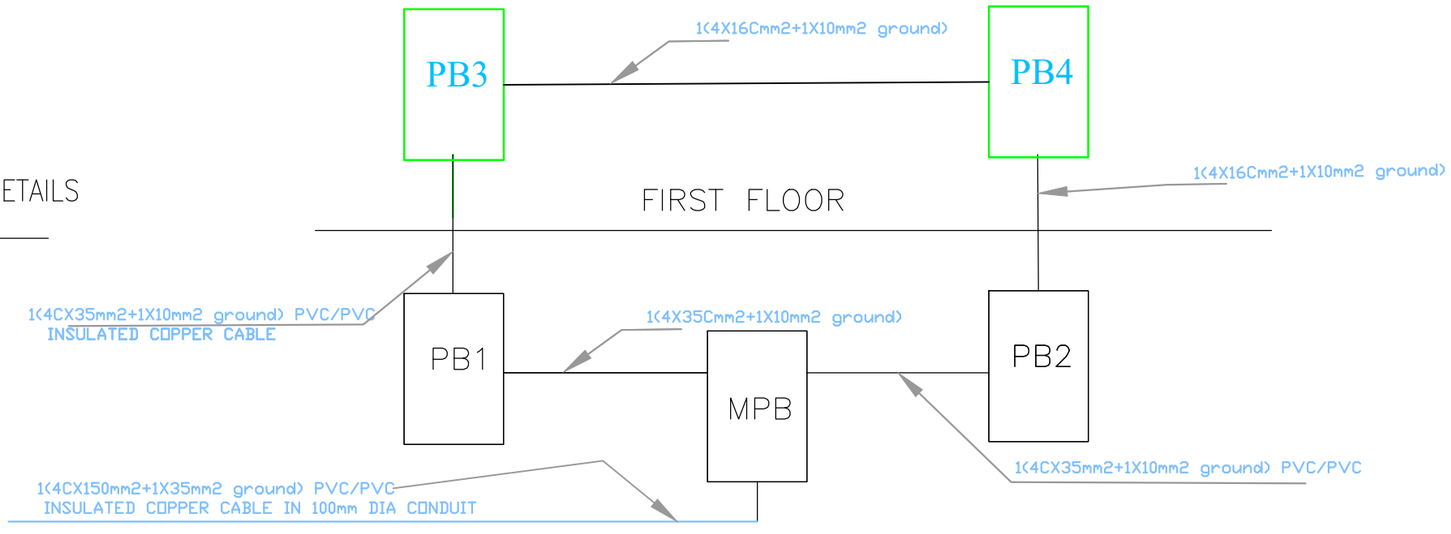

1 / E19 ELECTRICAL INSTALLATION DETAILS

SCALE: 1:100

LED FLOODLIGHT, WALL MOUNTED, PHOTOCELL CONTROLLED.

REV No	DESCRIPTION	Date
3	REVISION	05.28.20
2	100% SUBMITTAL	XX
1	FIRST ISSUE	XX
		APPROVED

SCAL 1:100

DATE: May 28, 2020
SUBMITTED BY: UNDP/LOTFA
CONTRACT NO.: XX
T.O.: 01

DESIGNED BY: Waheduddin Azimy
CHECKED BY: Eng. Muslim
APPROVED BY: Ms. Aamaliah Alawaishah

UNITED NATIONS DEVELOPMENT PROGRAM
LOTFA PROJECT AFGHANISTAN
KABUL MOI

ENGINEERING DIVISION

PERs PROJECT

UNDP / LOTFA AFGHANISTAN

KABUL, AFGHANISTAN

BUILDING 02 - PHQ
GROUND FLOOR LIGHTING PLAN

SHEET NUMBER
E19–20

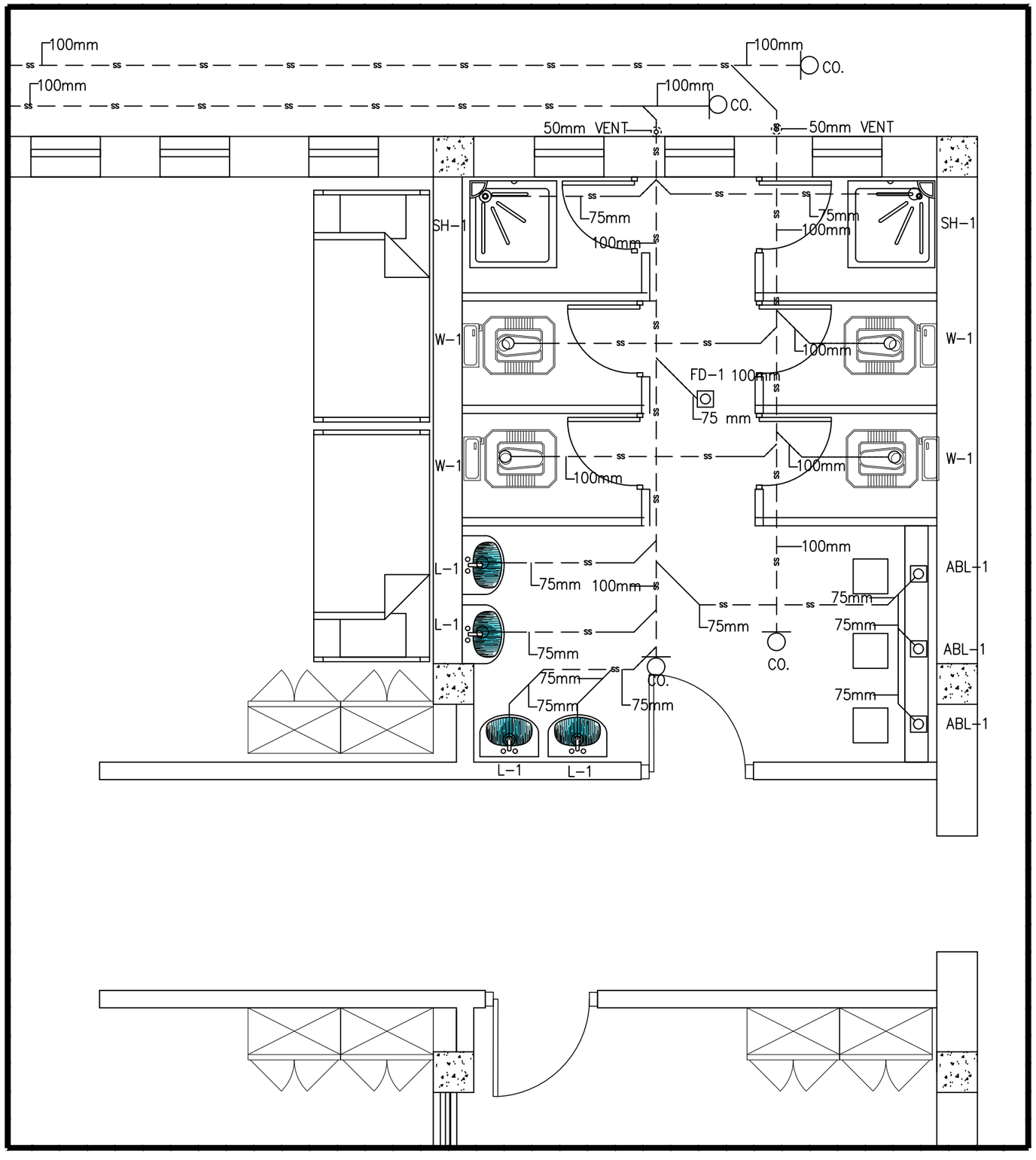

PROPOSED TOILET-SHOWER
GROUND FLOOR PLAN - PLUMBING (SANITARY)

1 / P-101

SCALE: 1:20

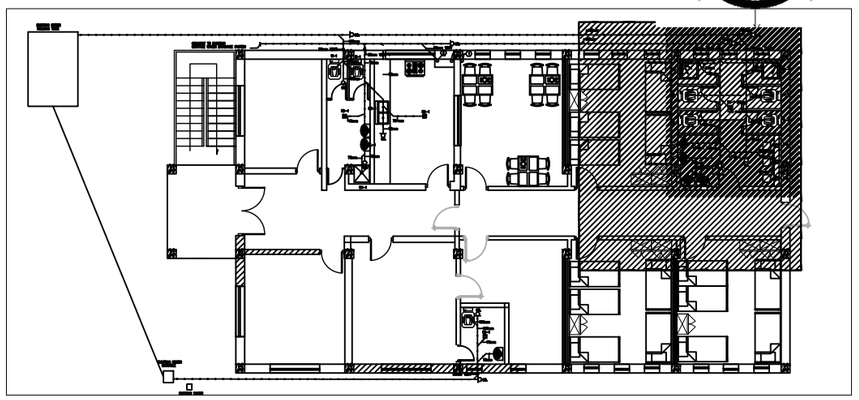

FLOOR PLAN NOTES:

1. ALL EASTERN STYLE WATER CLOSETS IN THIS FACILITY ARE TO HAVE THE FIXTURE DESIGNATION OF W-1. EACH FIXTURE SHALL HAVE A 25mm (1 INCH) COLD WATER LINE EXTENDED TO IT AND THEN BE REDUCED TO 13mm (1/2 INCH) FOR A FINAL CONNECTION TO THE FLUSH TANK AND A 102mm (4) INCH SANITARY CONNECTION.
2. ALL LAV FIXTURES IN THIS FACILITY ARE TO HAVE THE FIXTURE DESIGNATION OF L-1. EACH FIXTURE SHALL HAVE A 13mm (1/2 INCH) COLD WATER, 13mm (1/2 INCH) HOT WATER CONNECTION AND A 76mm (3 INCH) SANITARY CONNECTION.
3. ALL ABLUTION FIXTURES IN THIS FACILITY ARE TO HAVE THE FIXTURE DESIGNATION OF ABL-1. EACH FIXTURE SHALL HAVE A 13mm (1/2 INCH) COLD WATER, 13mm (1/2 INCH) HOT WATER CONNECTION.
4. ALL SHOWERS FIXTURES IN THIS FACILITY ARE TO HAVE THE FIXTURE DESIGNATION OF SH-1. EACH FIXTURE SHALL HAVE A 13mm (1/2 INCH) COLD WATER, 13mm (1/2 INCH) HOT WATER CONNECTION.
5. REFER TO SHEET P501 FOR DETAILS AND SYMBOLS.
6. ALL WATER, SANITARY AND VENT LINES TO BE EXPOSED. RUN LINES TIGHT TO CEILING AND WALL.

GROUND FLOOR SANITARY KEY NOTES:

1. 100mm EXISTING SANITARY SOIL LINE DOWN FROM 1ST FLOOR EXTEND LINE UNDER GROUND AND CONNECT TO 100mm SANITARY LINE.
2. 100mm SANITARY WASTE LINE DOWN ON 1ST FLOOR TO GROUND FLOOR/UNDER GROUND AND CONNECT TO 100 MM SANITARY LINE
3. 100mm PROPOSED SANITARY SOIL LINE DOWN FROM 1ST FLOOR – EXTEND LINE UNDER GROUND AND CONNECT TO 100mm SANITARY LINE.

PLUMBING SYMBOLS

- ss — SANITARY SEWER PIPING (BELOW GROUND)
- ss — SANITARY SEWER PIPING (ABOVE GROUND)
- VENT PIPING (V)
- COLD WATER PIPING (CW)
- HOT WATER PIPING (HW)
- P — PROPANE LINE
- P — TWO STAGE PRESSURE GAUGE
- BALL VALVE
- BACKFLOW PREVENTER
- OR — CLEANOUT (CO.)
- ROOF PENETRATION

REV No	DESCRIPTION	Date	APPROVED
3	REVISION	05-29-20	XX
2	100% SUBMITTAL		XX
1	FIRST ISSUE		XX

SCAL 1:20

DESIGNED BY: MOHAMMAD SHAH ADLI
DATE: 05.29.2020
CHECKED BY: MUSLIM RUHAN
SUBMITTED BY: UNDP/LOTFA
APPROVED BY: ASMAHAN ALAWASHEH
CONTRACT NO.: XX T.O.: 01

UNITED NATIONS DEVELOPMENT PROGRAM
LOTFA PROJECT AFGHANISTAN
KABUL MOI

ENGINEERING DIVISION

PERs PROJECT

UNDP / LOTFA AFGHANISTAN

KABUL, AFGHANISTAN

BUILDING 02 - GROUND FLOOR ENLARGED SEWER PLAN

SHEET NUMBER

P-101

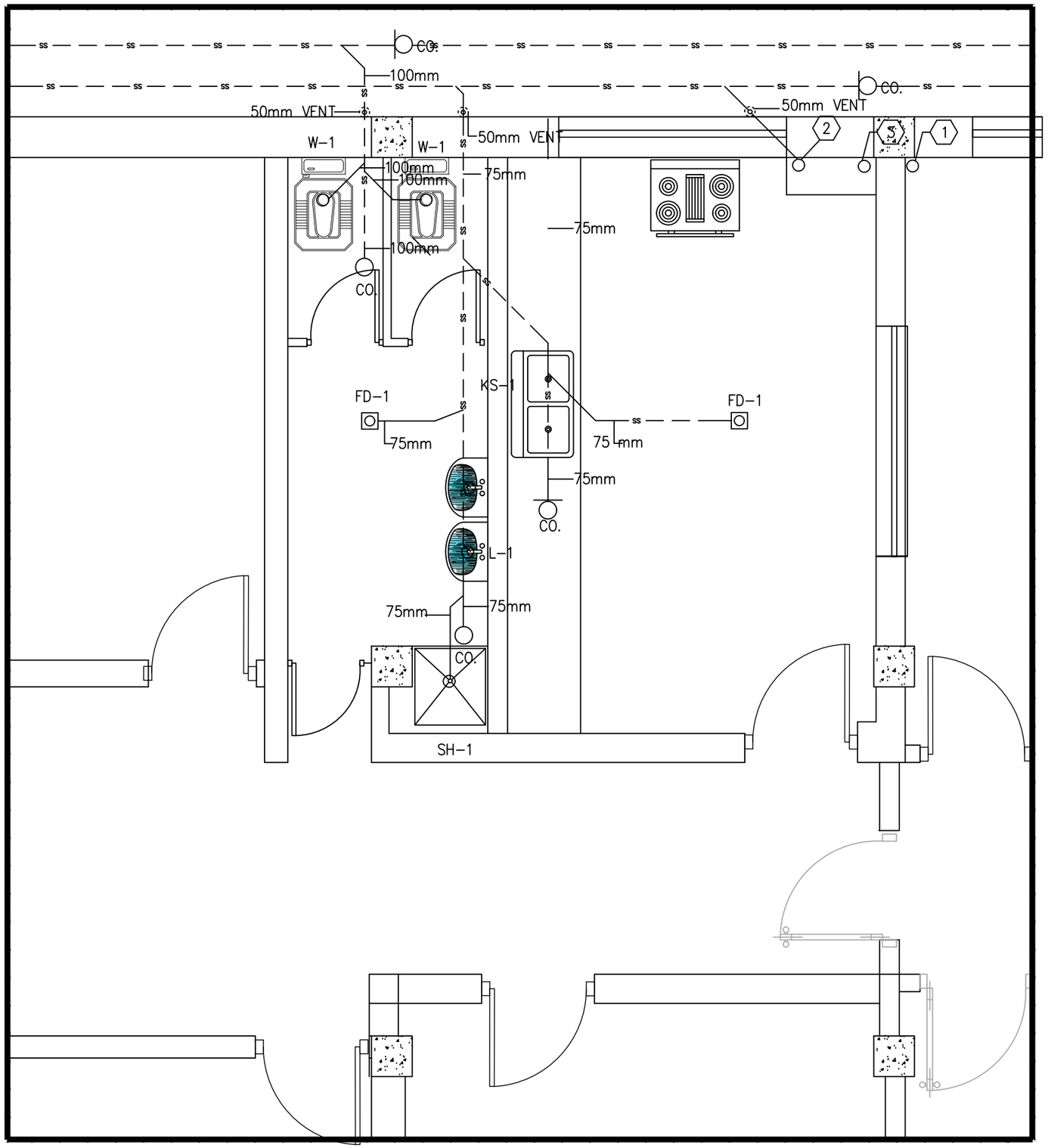

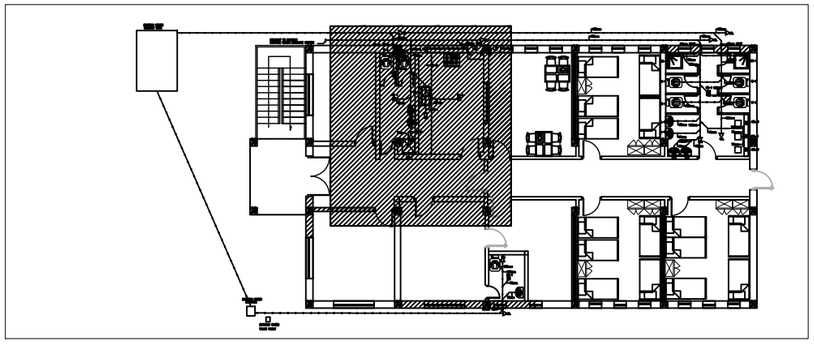

FLOOR PLAN NOTES:

1. ALL EASTERN STYLE WATER CLOSETS IN THIS FACILITY ARE TO HAVE THE FIXTURE DESIGNATION OF W-1. EACH FIXTURE SHALL HAVE A 25mm (1 INCH) COLD WATER LINE EXTENDED TO IT AND THEN BE REDUCED TO 13mm (1/2 INCH) FOR A FINAL CONNECTION TO THE FLUSH TANK AND A 102mm (4) INCH SANITARY CONNECTION.
2. ALL LAV FIXTURES IN THIS FACILITY ARE TO HAVE THE FIXTURE DESIGNATION OF L-1. EACH FIXTURE SHALL HAVE A 13mm (1/2 INCH) COLD WATER, 13mm (1/2 INCH) HOT WATER CONNECTION AND A 76mm (3 INCH) SANITARY CONNECTION.
3. ALL ABLUTION FIXTURES IN THIS FACILITY ARE TO HAVE THE FIXTURE DESIGNATION OF ABL-1. EACH FIXTURE SHALL HAVE A 13mm (1/2 INCH) COLD WATER, 13mm (1/2 INCH) HOT WATER CONNECTION.
4. ALL SHOWERS FIXTURES IN THIS FACILITY ARE TO HAVE THE FIXTURE DESIGNATION OF SH-1. EACH FIXTURE SHALL HAVE A 13mm (1/2 INCH) COLD WATER, 13mm (1/2 INCH) HOT WATER CONNECTION.
5. REFER TO SHEET P501 FOR DETAILS AND SYMBOLS.
6. ALL WATER, SANITARY AND VENT LINES TO BE EXPOSED. RUN LINES TIGHT TO CEILING AND WALL.

GROUND FLOOR SANITARY KEY NOTES:

(1) 100mm EXISTING SANITARY SOIL LINE DOWN FROM 1ST FLOOR EXTEND LINE UNDER GROUND AND CONNECT TO 100mm SANITARY LINE.

(2) 100mm SANITARY WASTE LINE DOWN ON 1ST FLOOR TO GROUND FLOOR/UNDER GROUND AND CONNECT TO 100 MM SANITARY LINE

(3) 100mm PROPOSED SANITARY SOIL LINE DOWN FROM 1ST FLOOR – EXTEND LINE UNDER GROUND AND CONNECT TO 100mm SANITARY LINE.

PLUMBING SYMBOLS

- SS — SANITARY SEWER PIPING (BELOW GROUND)
- SS — SANITARY SEWER PIPING (ABOVE GROUND)
- VENT PIPING (V)
- COLD WATER PIPING (CW)
- HOT WATER PIPING (HW)
- P — PROPANE LINE
- P — TWO STAGE PRESSURE GAUGE
- BALL VALVE
- BACKFLOW PREVENTER
- OR — CLEANOUT (CO.)
- ROOF PENETRATION

1 / P-102 PROPOSED TOILET AND KITCHEN GROUND FLOOR PLAN - PLUMBING (SANITARY)

SCALE: 1:20

REV No	DESCRIPTION	Date
3	REVISION	05.29.20
2	FIRST SUBMITTAL	XX
1	FIRST ISSUE	XX
		APPROVED

SCAL 1:20

DESIGNED BY: MOHAMMAD SHAH AOLI
DATE: 05.29.2020
CHECKED BY: MUSLIM RUHAN
SUBMITTED BY: UNDP/LOTFA
APPROVED BY: ASMAHAN ALAWASHEH
CONTRACT NO.: XX T.O.: 01

UNITED NATIONS DEVELOPMENT PROGRAM
LOTFA PROJECT AFGHANISTAN
KABUL MOI

ENGINEERING DIVISION

PERs PROJECT

UNDP / LOTFA AFGHANISTAN

KABUL, AFGHANISTAN

BUILDING 02 - GROUND FLOOR ENLARGED SEWER PLAN

SHEET NUMBER

P-102

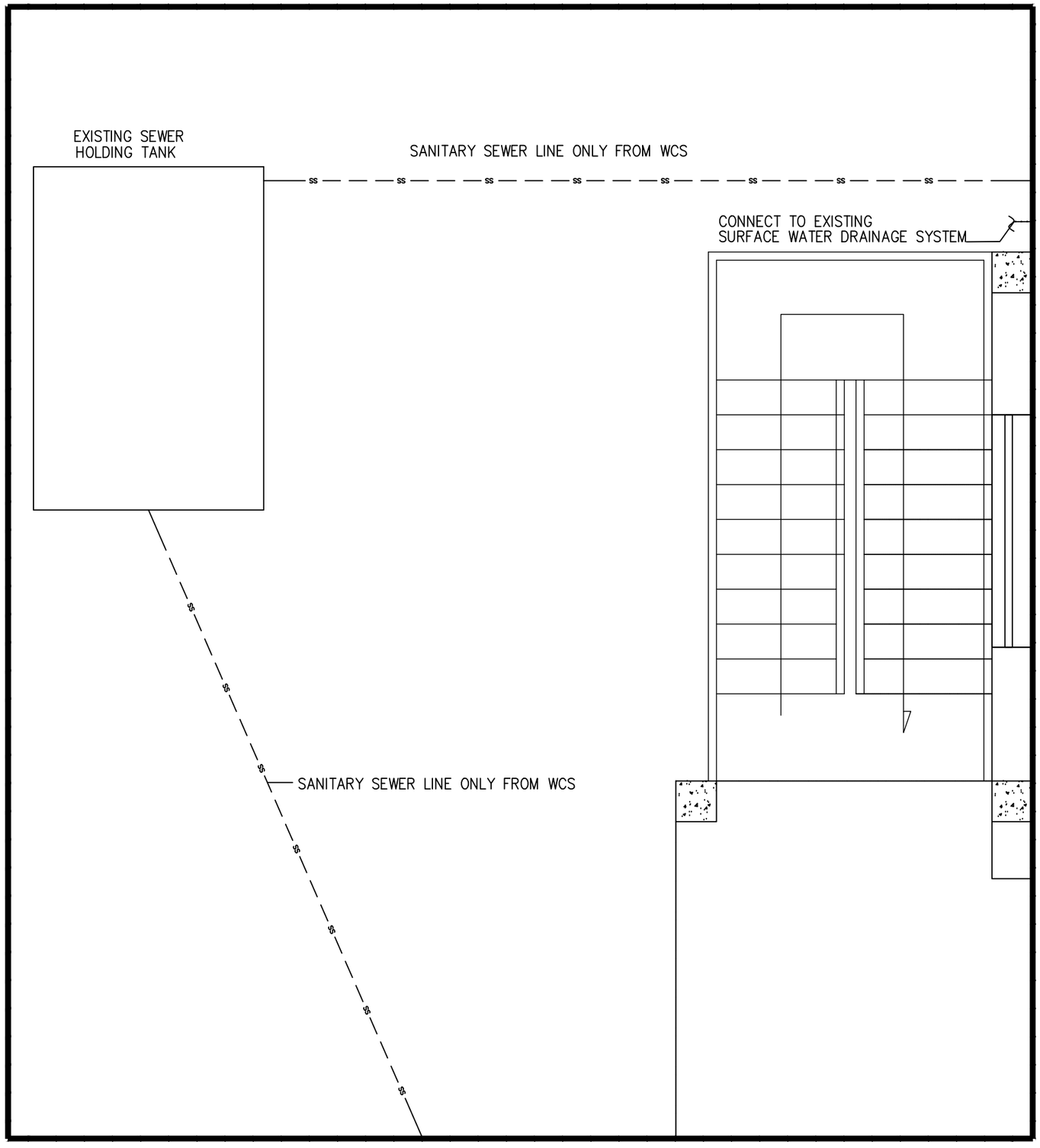

1
P-103
PROPOSED
GROUND FLOOR PLAN - PLUMBING (SANITARY)
SCALE: 1:20

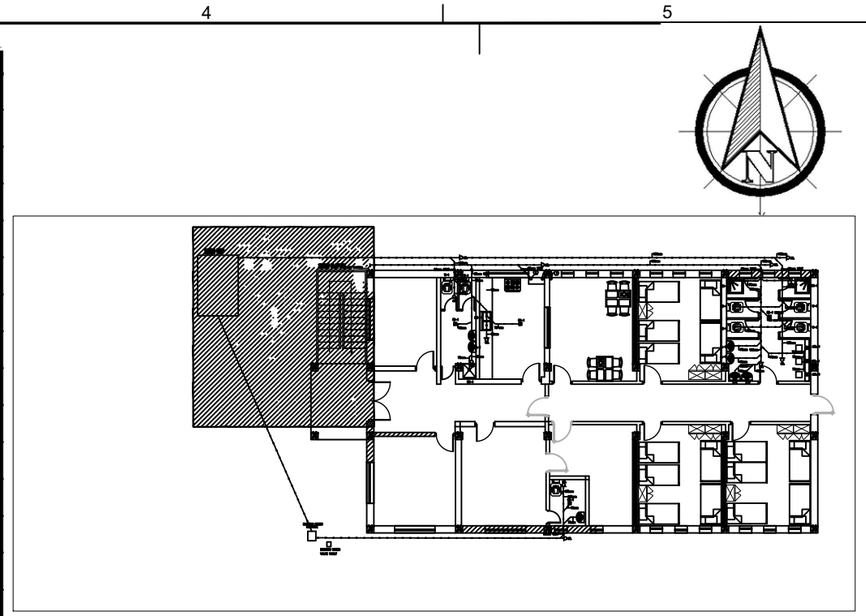

FLOOR PLAN NOTES:

1. ALL EASTERN STYLE WATER CLOSETS IN THIS FACILITY ARE TO HAVE THE FIXTURE DESIGNATION OF W-1. EACH FIXTURE SHALL HAVE A 25mm (1 INCH) COLD WATER LINE EXTENDED TO IT AND THEN BE REDUCED TO 13mm (1/2 INCH) FOR A FINAL CONNECTION TO THE FLUSH TANK AND A 102mm (4) INCH SANITARY CONNECTION.
2. ALL LAV FIXTURES IN THIS FACILITY ARE TO HAVE THE FIXTURE DESIGNATION OF L-1. EACH FIXTURE SHALL HAVE A 13mm (1/2 INCH) COLD WATER, 13mm (1/2 INCH) HOT WATER CONNECTION AND A 76mm (3 INCH) SANITARY CONNECTION.
3. ALL ABLUTION FIXTURES IN THIS FACILITY ARE TO HAVE THE FIXTURE DESIGNATION OF ABL-1. EACH FIXTURE SHALL HAVE A 13mm (1/2 INCH) COLD WATER, 13mm (1/2 INCH) HOT WATER CONNECTION.
4. ALL SHOWERS FIXTURES IN THIS FACILITY ARE TO HAVE THE FIXTURE DESIGNATION OF SH-1. EACH FIXTURE SHALL HAVE A 13mm (1/2 INCH) COLD WATER, 13mm (1/2 INCH) HOT WATER CONNECTION.
5. REFER TO SHEET P501 FOR DETAILS AND SYMBOLS.
6. ALL WATER, SANITARY AND VENT LINES TO BE EXPOSED. RUN LINES TIGHT TO CEILING AND WALL.

GROUND FLOOR SANITARY KEY NOTES:

1. 100mm EXISTING SANITARY SOIL LINE DOWN FROM 1ST FLOOR EXTEND LINE UNDER GROUND AND CONNECT TO 100mm SANITARY LINE.
2. 100mm SANITARY WASTE LINE DOWN ON 1ST FLOOR TO GROUND FLOOR/UNDER GROUND AND CONNECT TO 100 MM SANITARY LINE
3. 100mm PROPOSED SANITARY SOIL LINE DOWN FROM 1ST FLOOR – EXTEND LINE UNDER GROUND AND CONNECT TO 100mm SANITARY LINE.

PLUMBING SYMBOLS

- SS — SANITARY SEWER PIPING (BELOW GROUND)
- SS — SANITARY SEWER PIPING (ABOVE GROUND)
- VENT PIPING (V)
- COLD WATER PIPING (CW)
- HOT WATER PIPING (HW)
- P — PROPANE LINE
- P — TWO STAGE PRESSURE GAUGE
- BALL VALVE
- BACKFLOW PREVENTER
- OR — CLEANOUT (CO.)
- ROOF PENETRATION

REV No	DESCRIPTION	Date
3	REVISION	05.29.20
2	100% SUBMITTAL	XX
1	FIRST ISSUE	XX

SCAL 1:20

DESIGNED BY: MOHAMMAD SHAH AOLI
DATE: 05.29.2020
CHECKED BY: MUSLIM RUJMAN
SUBMITTED BY: UNDP/LOTFA
APPROVED BY: ASMAHAN ALAWASHEH
CONTRACT NO.: XX T.O.: 01

UNITED NATIONS DEVELOPMENT PROGRAM
LOTFA PROJECT AFGHANISTAN
KABUL MOI

ENGINEERING DIVISION
PERs PROJECT

UNDP / LOTFA AFGHANISTAN
KABUL, AFGHANISTAN
BUILDING 02 - GROUND FLOOR ENLARGED SEWER PLAN

SHEET NUMBER
P-103

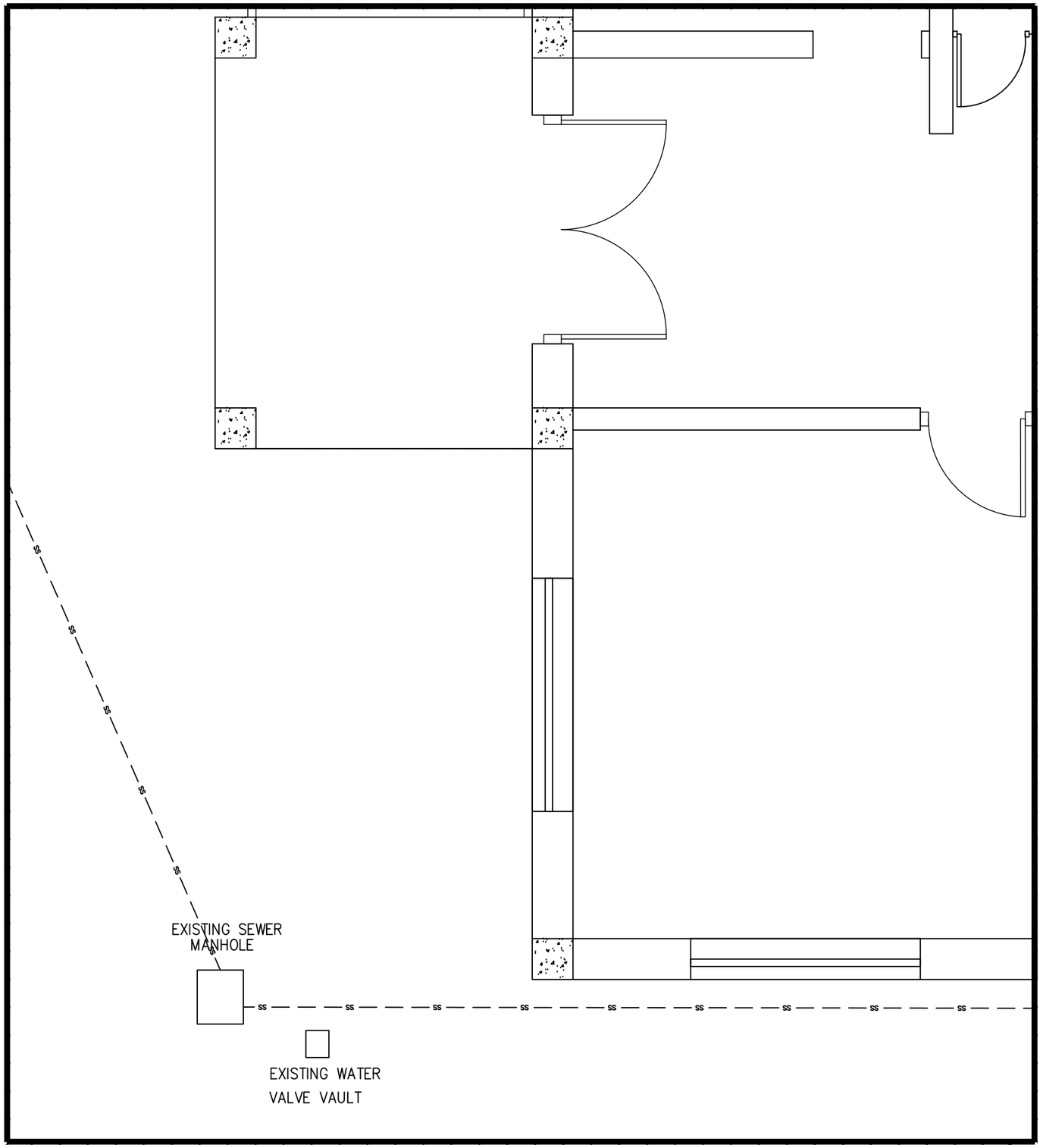

PROPOSED
GROUND FLOOR PLAN - PLUMBING (SANITARY)
1 / P-104
SCALE: 1:20

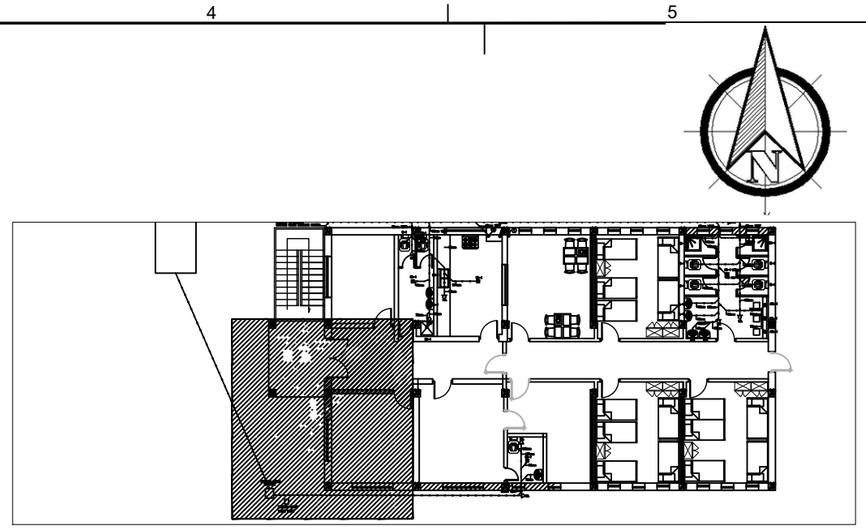

FLOOR PLAN NOTES:

1. ALL EASTERN STYLE WATER CLOSETS IN THIS FACILITY ARE TO HAVE THE FIXTURE DESIGNATION OF W-1. EACH FIXTURE SHALL HAVE A 25mm (1 INCH) COLD WATER LINE EXTENDED TO IT AND THEN BE REDUCED TO 13mm (1/2 INCH) FOR A FINAL CONNECTION TO THE FLUSH TANK AND A 102mm (4) INCH SANITARY CONNECTION.
2. ALL LAV FIXTURES IN THIS FACILITY ARE TO HAVE THE FIXTURE DESIGNATION OF L-1. EACH FIXTURE SHALL HAVE A 13mm (1/2 INCH) COLD WATER, 13mm (1/2 INCH) HOT WATER CONNECTION AND A 76mm (3 INCH) SANITARY CONNECTION.
3. ALL ABLUTION FIXTURES IN THIS FACILITY ARE TO HAVE THE FIXTURE DESIGNATION OF ABL-1. EACH FIXTURE SHALL HAVE A 13mm (1/2 INCH) COLD WATER, 13mm (1/2 INCH) HOT WATER CONNECTION.
4. ALL SHOWERS FIXTURES IN THIS FACILITY ARE TO HAVE THE FIXTURE DESIGNATION OF SH-1. EACH FIXTURE SHALL HAVE A 13mm (1/2 INCH) COLD WATER, 13mm (1/2 INCH) HOT WATER CONNECTION.
5. REFER TO SHEET P501 FOR DETAILS AND SYMBOLS.
6. ALL WATER, SANITARY AND VENT LINES TO BE EXPOSED. RUN LINES TIGHT TO CEILING AND WALL.

GROUND FLOOR SANITARY KEY NOTES:

1. 100mm EXISTING SANITARY SOIL LINE DOWN FROM 1ST FLOOR EXTEND LINE UNDER GROUND AND CONNECT TO 100mm SANITARY LINE.
2. 100mm SANITARY WASTE LINE DOWN ON 1ST FLOOR TO GROUND FLOOR/UNDER GROUND AND CONNECT TO 100 MM SANITARY LINE
3. 100mm PROPOSED SANITARY SOIL LINE DOWN FROM 1ST FLOOR – EXTEND LINE UNDER GROUND AND CONNECT TO 100mm SANITARY LINE.

PLUMBING SYMBOLS

- SS — SANITARY SEWER PIPING (BELOW GROUND)
- SS — SANITARY SEWER PIPING (ABOVE GROUND)
- VENT PIPING (V)
- COLD WATER PIPING (CW)
- HOT WATER PIPING (HW)
- P — PROPANE LINE
- P — TWO STAGE PRESSURE GAUGE
- BALL VALVE
- BACKFLOW PREVENTER
- CLEANOUT (CO.) OR
- ROOF PENETRATION

REV No	DESCRIPTION	Date
3	REVISION	XX
2	100% SUBMITTAL	XX
1	FIRST ISSUE	05.29.20

SCAL 1:20

DESIGNED BY: MOHAMMAD SHAHAOLI
DATE: 05.29.2020
CHECKED BY: MUSLIM RUJMAN
SUBMITTED BY: UNDP/LOTFA
APPROVED BY: ASMAHAN ALAWASHEH
CONTRACT NO.: XX T.O.: 01

UNITED NATIONS DEVELOPMENT PROGRAM
LOTFA PROJECT AFGHANISTAN
KABUL MOI

ENGINEERING DIVISION
PERs PROJECT

UNDP / LOTFA AFGHANISTAN
KABUL, AFGHANISTAN
BUILDING 02 - GROUND FLOOR ENLARGED SEWER PLAN

SHEET NUMBER
P-104

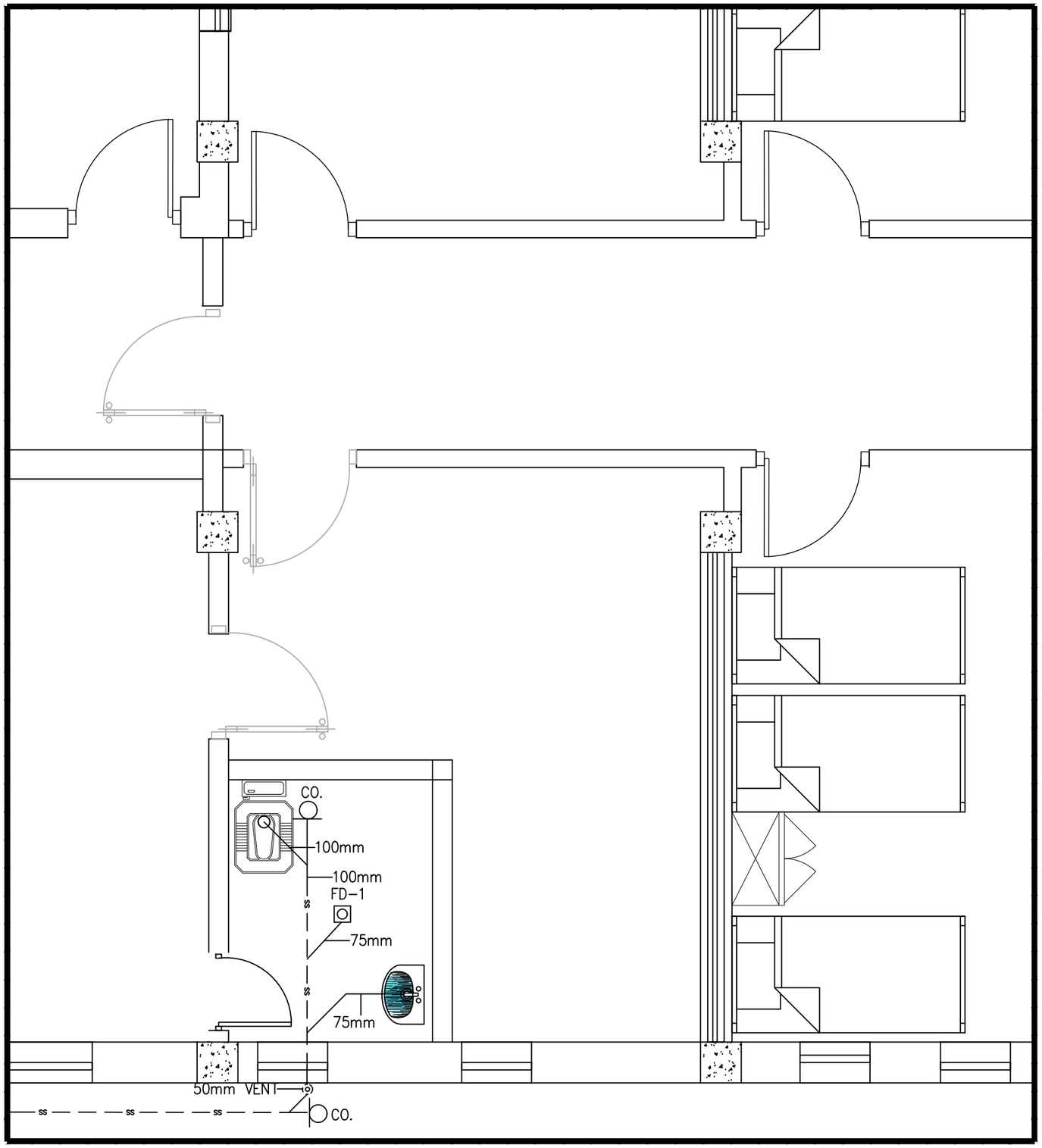

1
P-105
PROPOSED TOILET
GROUND FLOOR PLAN - PLUMBING (SANITARY)
SCALE: 1:20

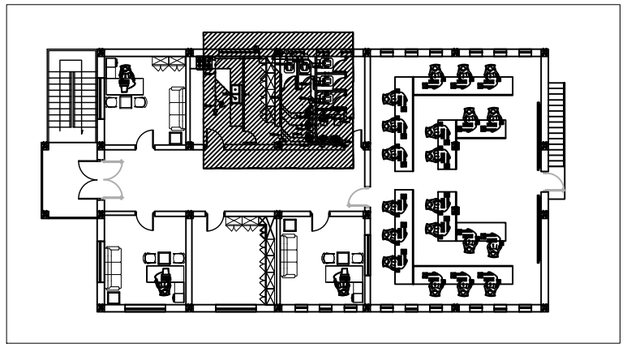

FLOOR PLAN NOTES:

1. ALL EASTERN STYLE WATER CLOSETS IN THIS FACILITY ARE TO HAVE THE FIXTURE DESIGNATION OF W-1. EACH FIXTURE SHALL HAVE A 25mm (1 INCH) COLD WATER LINE EXTENDED TO IT AND THEN BE REDUCED TO 13mm (1/2 INCH) FOR A FINAL CONNECTION TO THE FLUSH TANK AND A 102mm (4) INCH SANITARY CONNECTION.
2. ALL LAV FIXTURES IN THIS FACILITY ARE TO HAVE THE FIXTURE DESIGNATION OF L-1. EACH FIXTURE SHALL HAVE A 13mm (1/2 INCH) COLD WATER, 13mm (1/2 INCH) HOT WATER CONNECTION AND A 76mm (3 INCH) SANITARY CONNECTION.
3. ALL ABLUTION FIXTURES IN THIS FACILITY ARE TO HAVE THE FIXTURE DESIGNATION OF ABL-1. EACH FIXTURE SHALL HAVE A 13mm (1/2 INCH) COLD WATER, 13mm (1/2 INCH) HOT WATER CONNECTION.
4. ALL SHOWERS FIXTURES IN THIS FACILITY ARE TO HAVE THE FIXTURE DESIGNATION OF SH-1. EACH FIXTURE SHALL HAVE A 13mm (1/2 INCH) COLD WATER, 13mm (1/2 INCH) HOT WATER CONNECTION.
5. REFER TO SHEET P501 FOR DETAILS AND SYMBOLS.
6. ALL WATER, SANITARY AND VENT LINES TO BE EXPOSED. RUN LINES TIGHT TO CEILING AND WALL.

GROUND FLOOR SANITARY KEY NOTES:

1. 100mm EXISTING SANITARY SOIL LINE DOWN FROM 1ST FLOOR EXTEND LINE UNDER GROUND AND CONNECT TO 100mm SANITARY LINE.
2. 100mm SANITARY WASTE LINE DOWN ON 1ST FLOOR TO GROUND FLOOR/UNDER GROUND AND CONNECT TO 100 MM SANITARY LINE
3. 100mm PROPOSED SANITARY SOIL LINE DOWN FROM 1ST FLOOR – EXTEND LINE UNDER GROUND AND CONNECT TO 100mm SANITARY LINE.

PLUMBING SYMBOLS

- SS — SANITARY SEWER PIPING (BELOW GROUND)
- SS — SANITARY SEWER PIPING (ABOVE GROUND)
- VENT PIPING (V)
- COLD WATER PIPING (CW)
- HOT WATER PIPING (HW)
- P — PROPANE LINE
- P — TWO STAGE PRESSURE GAUGE
- BALL VALVE
- BACKFLOW PREVENTER
- OR — CLEANOUT (CO.)
- ROOF PENETRATION

REV No	DESCRIPTION	Date
3	REVISION	05.29.20
2	100% SUBMITTAL	XX
1	FIRST ISSUE	XX

SCAL 1:20

DESIGNED BY: MOHAMMAD SHAH ADLI
DATE: 05.29.2020
CHECKED BY: MUSLIM RUJMAN
SUBMITTED BY: UNDP/LOTFA
APPROVED BY: ASMAHAN ALAWASHEH
CONTRACT NO.: XX T.O.: 01

UNITED NATIONS DEVELOPMENT PROGRAM
LOTFA PROJECT AFGHANISTAN
KABUL MOI

ENGINEERING DIVISION
PERs PROJECT

UNDP / LOTFA AFGHANISTAN
KABUL, AFGHANISTAN
BUILDING 02 - GROUND FLOOR ENLARGED SEWER PLAN

SHEET NUMBER
P-105

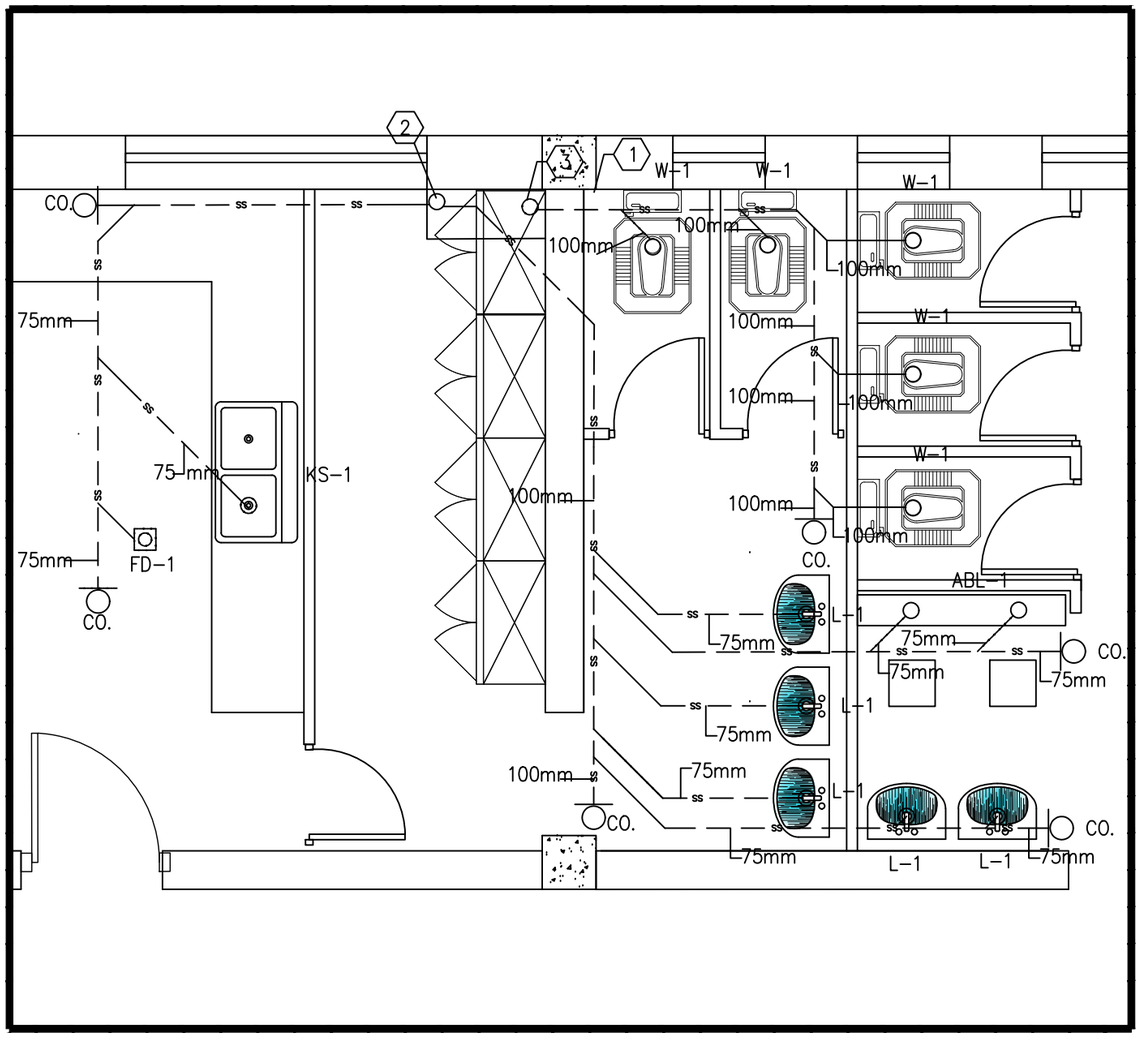

PROPOSED TOILET AND KITCHEN
FIRST FLOOR PLAN - PLUMBING (SANITARY)

1 / P-106 SCALE: 1:20

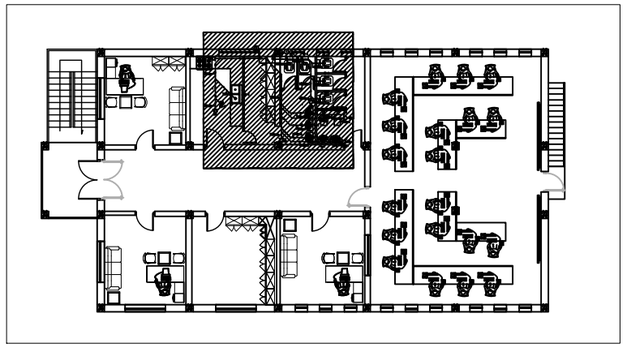

FLOOR PLAN NOTES:

1. ALL EASTERN STYLE WATER CLOSETS IN THIS FACILITY ARE TO HAVE THE FIXTURE DESIGNATION OF W-1. EACH FIXTURE SHALL HAVE A 25mm (1 INCH) COLD WATER LINE EXTENDED TO IT AND THEN BE REDUCED TO 13mm (1/2 INCH) FOR A FINAL CONNECTION TO THE FLUSH TANK AND A 102mm (4) INCH SANITARY CONNECTION.
2. ALL LAV FIXTURES IN THIS FACILITY ARE TO HAVE THE FIXTURE DESIGNATION OF L-1. EACH FIXTURE SHALL HAVE A 13mm (1/2 INCH) COLD WATER, 13mm (1/2 INCH) HOT WATER CONNECTION AND A 76mm (3 INCH) SANITARY CONNECTION.
3. ALL ABLUTION FIXTURES IN THIS FACILITY ARE TO HAVE THE FIXTURE DESIGNATION OF ABL-1. EACH FIXTURE SHALL HAVE A 13mm (1/2 INCH) COLD WATER, 13mm (1/2 INCH) HOT WATER CONNECTION.
4. ALL SHOWERS FIXTURES IN THIS FACILITY ARE TO HAVE THE FIXTURE DESIGNATION OF SH-1. EACH FIXTURE SHALL HAVE A 13mm (1/2 INCH) COLD WATER, 13mm (1/2 INCH) HOT WATER CONNECTION.
5. REFER TO SHEET P501 FOR DETAILS AND SYMBOLS.
6. ALL WATER, SANITARY AND VENT LINES TO BE EXPOSED. RUN LINES TIGHT TO CEILING AND WALL.

1ST FLOOR SANITARY KEY NOTES:

1. 100mm EXISTING SANITARY SOIL LINE DOWN FROM 1ST FLOOR EXTEND LINE UNDER GROUND AND CONNECT TO 100mm SANITARY LINE.
2. 100mm SANITARY WASTE LINE DOWN ON 1ST FLOOR TO GROUND FLOOR/UNDER GROUND AND CONNECT TO 100 MM SANITARY LINE
3. 100mm PROPOSED SANITARY SOIL LINE DOWN FROM 1ST FLOOR – EXTEND LINE UNDER GROUND AND CONNECT TO 100mm SANITARY LINE.

PLUMBING SYMBOLS

- ss — SANITARY SEWER PIPING (BELOW GROUND)
- ss — SANITARY SEWER PIPING (ABOVE GROUND)
- VENT PIPING (V)
- COLD WATER PIPING (CW)
- HOT WATER PIPING (HW)
- P — PROPANE LINE
- P — TWO STAGE PRESSURE GAUGE
- BALL VALVE
- BACKFLOW PREVENTER
- OR — CLEANOUT (CO.)
- ROOF PENETRATION

REV No	DESCRIPTION	Date	APPROVED
3	REVISION		
2	100% SUBMITTAL	05.29.20	XX
1	FIRST ISSUE		XX

SCAL 1:20

DESIGNED BY: MOHAMMAD SHAFAQI
DATE: 05.29.2020
CHECKED BY: MUSLIM RUHANI
SUBMITTED BY: UNDP/LOTFA
APPROVED BY: ASMAHAN ALAWASHEH
CONTRACT NO.: XX T.O.: 01

UNITED NATIONS DEVELOPMENT PROGRAM
LOTFA PROJECT AFGHANISTAN
KABUL MOI

ENGINEERING DIVISION
PERs PROJECT

UNDP / LOTFA AFGHANISTAN
KABUL, AFGHANISTAN
BUILDING 02 - FIRST FLOOR ENLARGED SEWER PLAN

SHEET NUMBER
P-106

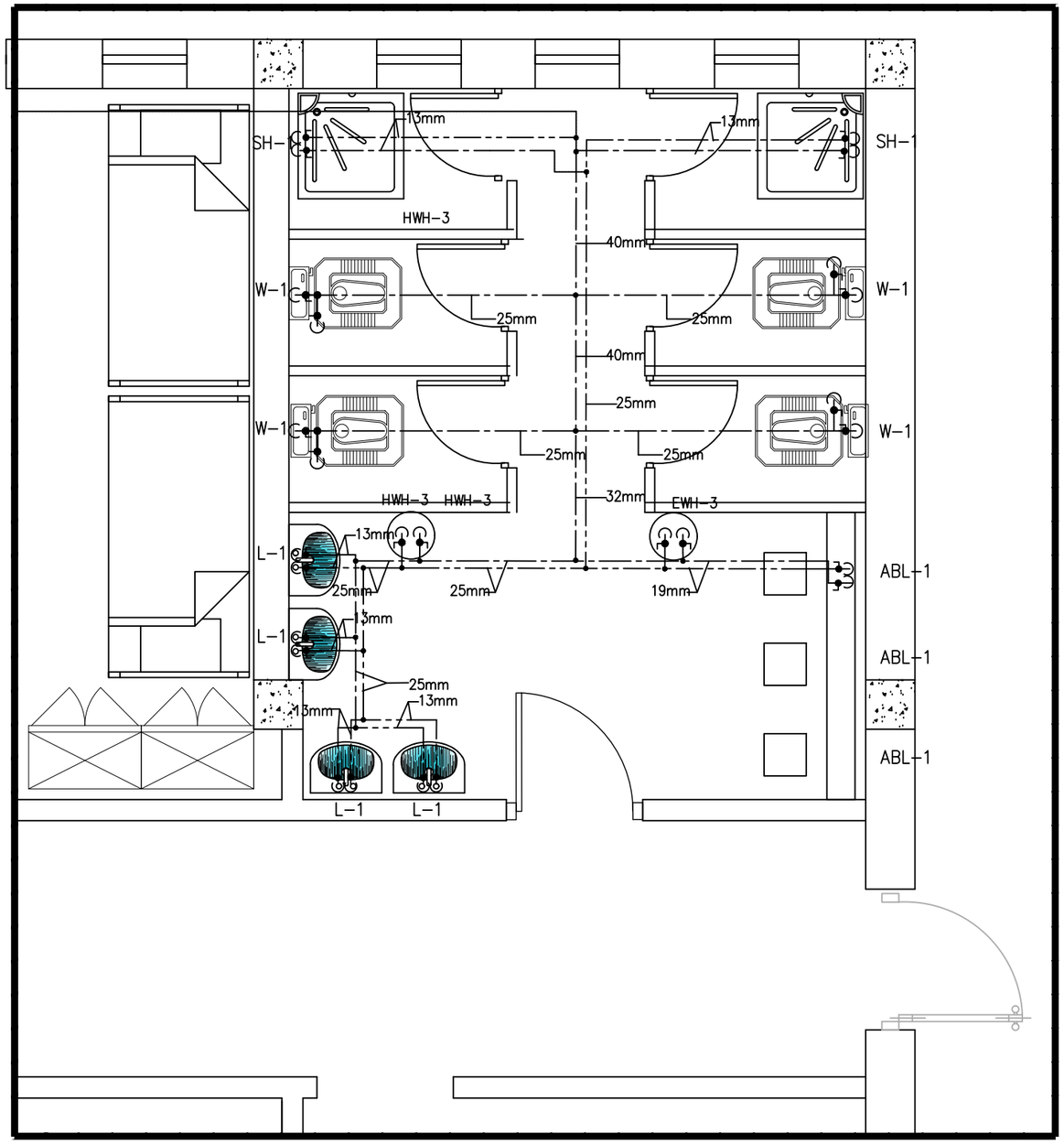

PROPOSED TOILET-SHOWER GROUND FLOOR PLAN - PLUMBING (HOT & COLD WATER)

1 / P-107

SCALE: 1:20

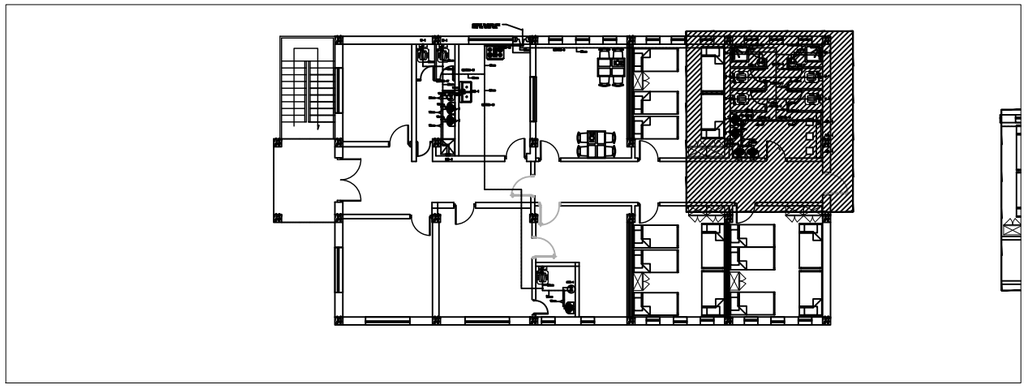

FLOOR PLAN NOTES:

1. ALL EASTERN STYLE WATER CLOSETS IN THIS FACILITY ARE TO HAVE THE FIXTURE DESIGNATION OF W-1. EACH FIXTURE SHALL HAVE A 25mm (1 INCH) COLD WATER LINE EXTENDED TO IT AND THEN BE REDUCED TO 13mm (1/2 INCH) FOR A FINAL CONNECTION TO THE FLUSH TANK AND A 102mm (4) INCH SANITARY CONNECTION.
2. ALL LAV FIXTURES IN THIS FACILITY ARE TO HAVE THE FIXTURE DESIGNATION OF L-1. EACH FIXTURE SHALL HAVE A 13mm (1/2 INCH) COLD WATER, 13mm (1/2 INCH) HOT WATER CONNECTION AND A 76mm (3 INCH) SANITARY CONNECTION.
3. ALL ABLUTION FIXTURES IN THIS FACILITY ARE TO HAVE THE FIXTURE DESIGNATION OF ABL-1. EACH FIXTURE SHALL HAVE A 13mm (1/2 INCH) COLD WATER, 13mm (1/2 INCH) HOT WATER CONNECTION.
4. ALL SHOWERS FIXTURES IN THIS FACILITY ARE TO HAVE THE FIXTURE DESIGNATION OF SH-1. EACH FIXTURE SHALL HAVE A 13mm (1/2 INCH) COLD WATER, 13mm (1/2 INCH) HOT WATER CONNECTION.
5. REFER TO SHEET P501 FOR DETAILS AND SYMBOLS.
6. ALL WATER, SANITARY AND VENT LINES TO BE EXPOSED. RUN LINES TIGHT TO CEILING AND WALL.

GROUND FLOOR WATER KEY NOTES:

1. 50mm WATER LINE DOWN EXTENDED FROM ROOF WATER TANK TO GROUND FLOOR FIXTURES
2. 50 mm WATER LINE EXTENDED FORM WATER WELL TO ROOF WATER TANK

PLUMBING SYMBOLS

- SS — SANITARY SEWER PIPING (BELOW GROUND)
- SS — SANITARY SEWER PIPING (ABOVE GROUND)
- VENT PIPING (V)
- COLD WATER PIPING (CW)
- HOT WATER PIPING (HW)
- P — PROPANE LINE
- P — TWO STAGE PRESSURE GAUGE
- BALL VALVE
- BACKFLOW PREVENTER
- OR — CLEANOUT (CO.)
- ROOF PENETRATION

REV No	DESCRIPTION	Date
3	REVISION	05.29.20
2	100% SUBMITTAL	XX
1	FIRST ISSUE	XX

SCAL 1:20

APPROVED

DESIGNED BY: MOHAMMAD SHAH ADLI
DATE: 05.29.2020
CHECKED BY: MUSLIM RUJMAN
SUBMITTED BY: UNDP/LOTFA
APPROVED BY: ASMAHAN ALAWASHEH
CONTRACT NO.: XX T.O.: 01

UNITED NATIONS DEVELOPMENT PROGRAM
LOTFA PROJECT AFGHANISTAN
KABUL MOI

ENGINEERING DIVISION

PERs PROJECT

UNDP / LOTFA AFGHANISTAN

KABUL, AFGHANISTAN

BUILDING 02 - GROUND FLOOR HOT AND COD WATER PLAN

SHEET NUMBER

P-107

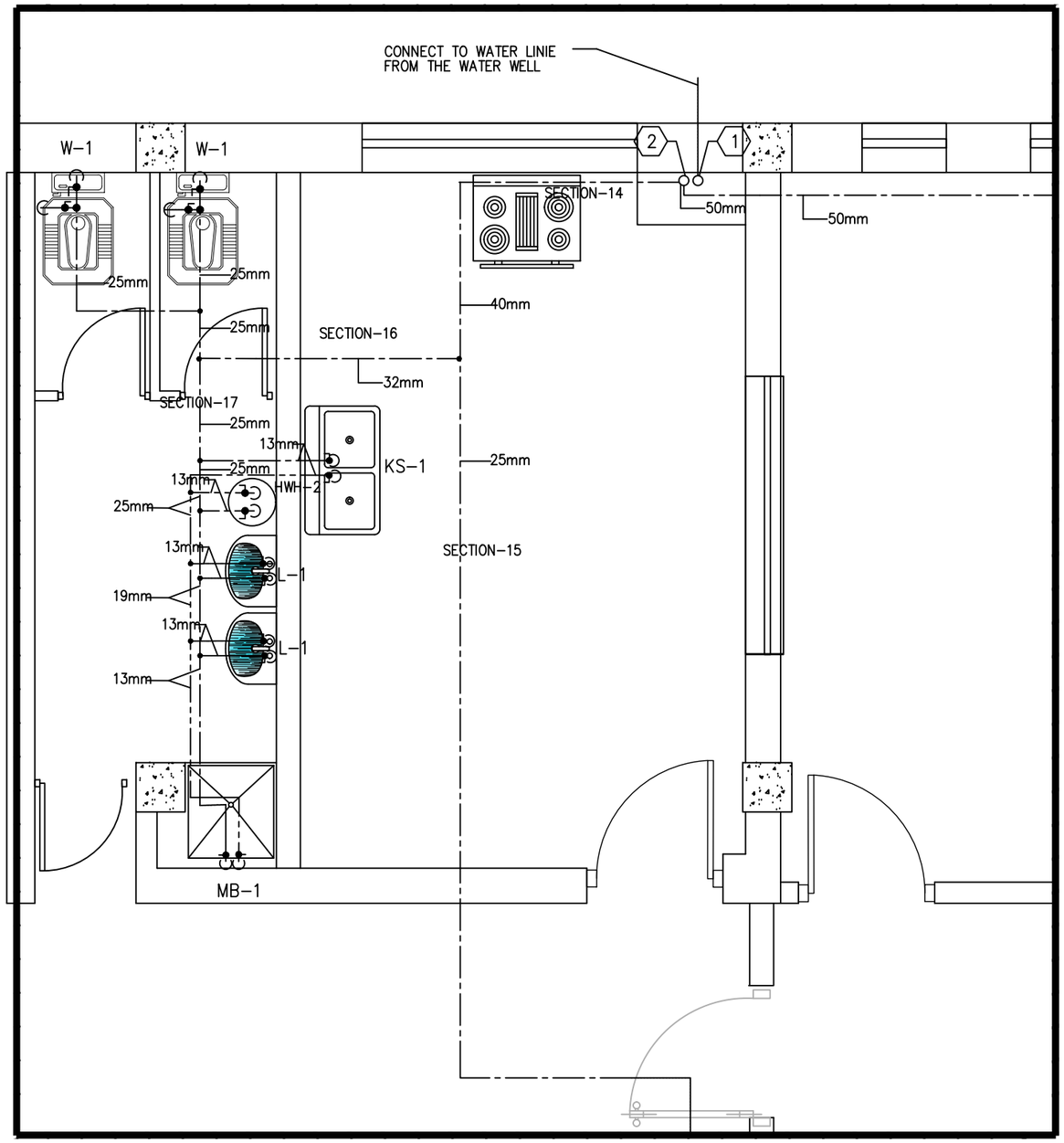

PROPOSED TOILET AND KITCHEN
GROUND FLOOR PLAN - PLUMBING (HOT & COLD WATER)

1 / P-108

SCALE: 1:20

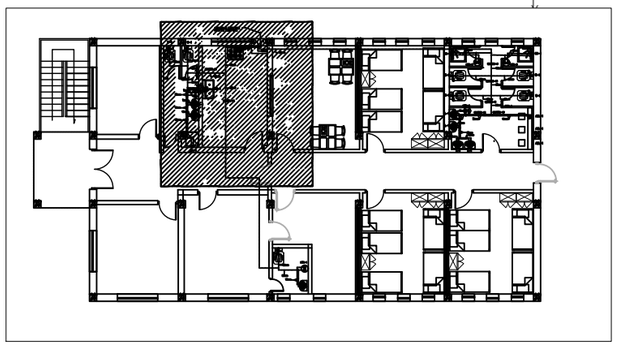

FLOOR PLAN NOTES:

1. ALL EASTERN STYLE WATER CLOSETS IN THIS FACILITY ARE TO HAVE THE FIXTURE DESIGNATION OF W-1. EACH FIXTURE SHALL HAVE A 25mm (1 INCH) COLD WATER LINE EXTENDED TO IT AND THEN BE REDUCED TO 13mm (1/2 INCH) FOR A FINAL CONNECTION TO THE FLUSH TANK AND A 102mm (4) INCH SANITARY CONNECTION.
2. ALL LAV FIXTURES IN THIS FACILITY ARE TO HAVE THE FIXTURE DESIGNATION OF L-1. EACH FIXTURE SHALL HAVE A 13mm (1/2 INCH) COLD WATER, 13mm (1/2 INCH) HOT WATER CONNECTION AND A 76mm (3 INCH) SANITARY CONNECTION.
3. ALL ABLUTION FIXTURES IN THIS FACILITY ARE TO HAVE THE FIXTURE DESIGNATION OF ABL-1. EACH FIXTURE SHALL HAVE A 13mm (1/2 INCH) COLD WATER, 13mm (1/2 INCH) HOT WATER CONNECTION.
4. ALL SHOWERS FIXTURES IN THIS FACILITY ARE TO HAVE THE FIXTURE DESIGNATION OF SH-1. EACH FIXTURE SHALL HAVE A 13mm (1/2 INCH) COLD WATER, 13mm (1/2 INCH) HOT WATER CONNECTION.
5. REFER TO SHEET P501 FOR DETAILS AND SYMBOLS.
6. ALL WATER, SANITARY AND VENT LINES TO BE EXPOSED. RUN LINES TIGHT TO CEILING AND WALL.

GROUND FLOOR WATER KEY NOTES:

1. 50mm WATER LINE DOWN EXTENDED FROM ROOF WATER TANK TO GROUND FLOOR FIXTURES
2. 50 mm WATER LINE EXTENDED FORM WATER WELL TO ROOF WATER TANK

PLUMBING SYMBOLS

- SS — SANITARY SEWER PIPING (BELOW GROUND)
- SS — SANITARY SEWER PIPING (ABOVE GROUND)
- VENT PIPING (V)
- COLD WATER PIPING (CW)
- HOT WATER PIPING (HW)
- P — PROPANE LINE
- P — TWO STAGE PRESSURE GAUGE
- BALL VALVE
- BACKFLOW PREVENTER
- OR — CLEANOUT (CO.)
- ROOF PENETRATION

REV No	DESCRIPTION	Date
3	REVISION	05.29.20
2	100% SUBMITTAL	XX
1	FIRST ISSUE	XX

SCAL 1:20

DESIGNED BY: MOHAMMAD SHAH ADLI
DATE: 05.29.2020
CHECKED BY: MUSLIM RUHAN
SUBMITTED BY: UNDP/LOTFA
APPROVED BY: ASMAHAN ALAWASHEH
CONTRACT NO.: XX T.O.: 01

UNITED NATIONS DEVELOPMENT PROGRAM
LOTFA PROJECT AFGHANISTAN
KABUL MOI

ENGINEERING DIVISION
PERs PROJECT

UNDP / LOTFA AFGHANISTAN
KABUL, AFGHANISTAN
BUILDING 02 - GROUND FLOOR ENLARGED HOT & COLD WATER PLAN

SHEET NUMBER
P-108

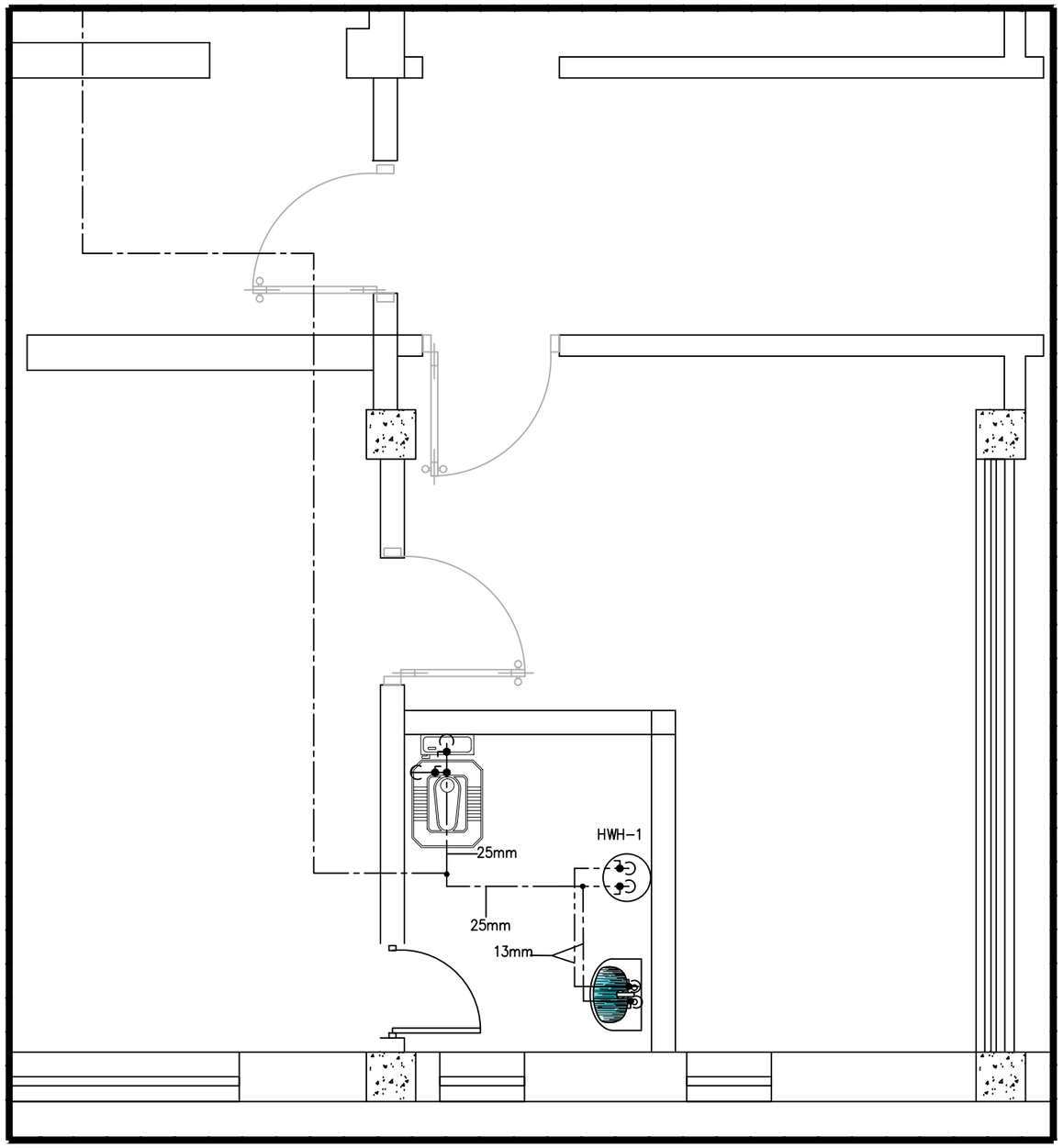

PROPOSED TOILET
GROUND FLOOR PLAN - PLUMBING (HOT & COLD WATER)

1 / P-109 SCALE: 1:20

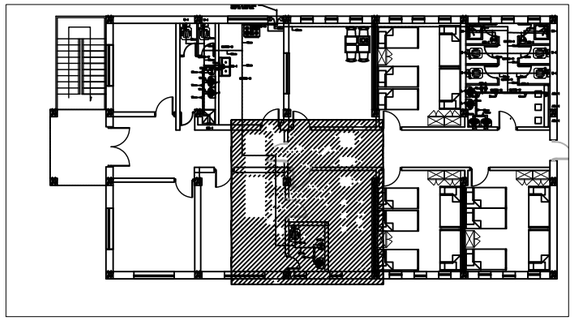

FLOOR PLAN NOTES:

1. ALL EASTERN STYLE WATER CLOSETS IN THIS FACILITY ARE TO HAVE THE FIXTURE DESIGNATION OF W-1. EACH FIXTURE SHALL HAVE A 25mm (1 INCH) COLD WATER LINE EXTENDED TO IT AND THEN BE REDUCED TO 13mm (1/2 INCH) FOR A FINAL CONNECTION TO THE FLUSH TANK AND A 102mm (4) INCH SANITARY CONNECTION.
2. ALL LAV FIXTURES IN THIS FACILITY ARE TO HAVE THE FIXTURE DESIGNATION OF L-1. EACH FIXTURE SHALL HAVE A 13mm (1/2 INCH) COLD WATER, 13mm (1/2 INCH) HOT WATER CONNECTION AND A 76mm (3 INCH) SANITARY CONNECTION.
3. ALL ABLUTION FIXTURES IN THIS FACILITY ARE TO HAVE THE FIXTURE DESIGNATION OF ABL-1. EACH FIXTURE SHALL HAVE A 13mm (1/2 INCH) COLD WATER, 13mm (1/2 INCH) HOT WATER CONNECTION.
4. ALL SHOWERS FIXTURES IN THIS FACILITY ARE TO HAVE THE FIXTURE DESIGNATION OF SH-1. EACH FIXTURE SHALL HAVE A 13mm (1/2 INCH) COLD WATER, 13mm (1/2 INCH) HOT WATER CONNECTION.
5. REFER TO SHEET P501 FOR DETAILS AND SYMBOLS.
6. ALL WATER, SANITARY AND VENT LINES TO BE EXPOSED. RUN LINES TIGHT TO CEILING AND WALL.

GROUND FLOOR WATER KEY NOTES:

1. 50mm WATER LINE DOWN EXTENDED FROM ROOF WATER TANK TO GROUND FLOOR FIXTURES
2. 50 mm WATER LINE EXTENDED FORM WATER WELL TO ROOF WATER TANK

PLUMBING SYMBOLS

- SS — SANITARY SEWER PIPING (BELOW GROUND)
- SS — SANITARY SEWER PIPING (ABOVE GROUND)
- VENT PIPING (V)
- COLD WATER PIPING (CW)
- HOT WATER PIPING (HW)
- P — PROPANE LINE
- P — TWO STAGE PRESSURE GAUGE
- BALL VALVE
- BACKFLOW PREVENTER
- OR — CLEANOUT (CO.)
- ROOF PENETRATION

REV No	DESCRIPTION	Date
3		
2		
1	FIRST ISSUE	05.29.20
	100% SUBMITTAL	XX
	REVISION	XX
		XX
		APPROVED

SCAL 1:20

DESIGNED BY: MOHAMMAD SHAH ADLI
DATE: 05.29.2020
CHECKED BY: MUSLIM RUJMAN
SUBMITTED BY: UNDP/LOTFA
APPROVED BY: ASMAHAN ALAWASHEH
CONTRACT NO.: XX T.O.: 01

UNITED NATIONS DEVELOPMENT PROGRAM
LOTFA PROJECT AFGHANISTAN
KABUL MOI

ENGINEERING DIVISION
PERs PROJECT

UNDP / LOTFA AFGHANISTAN
KABUL, AFGHANISTAN
BUILDING 02 - GROUND FLOOR ENLARGED HOT & COLD WATER PLAN

SHEET NUMBER
P-109

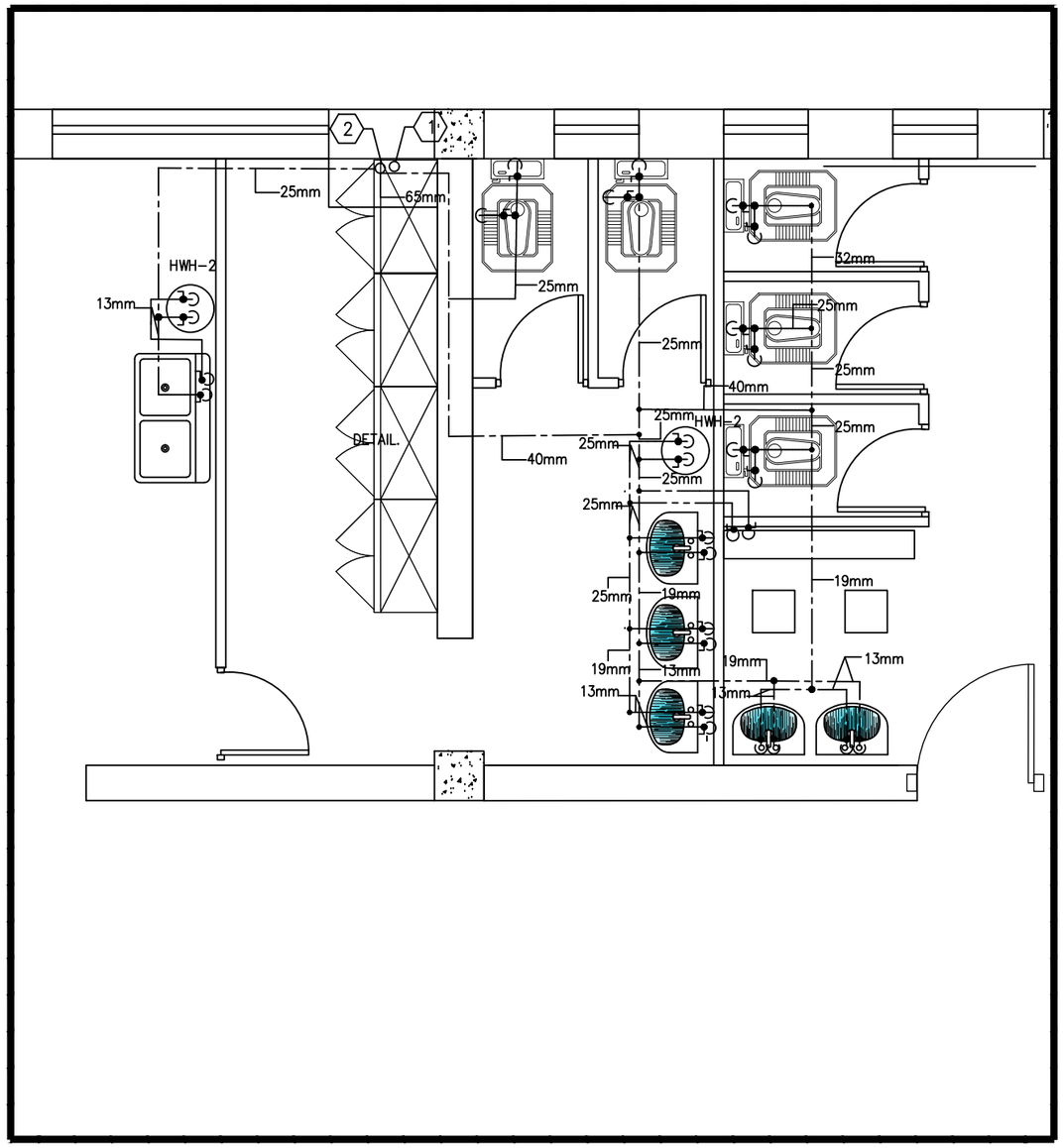

PROPOSED TOILET AND KITCHEN FIRST FLOOR PLAN - PLUMBING (HOT & COLD WATER)

1 / P-110

SCALE: 1:20

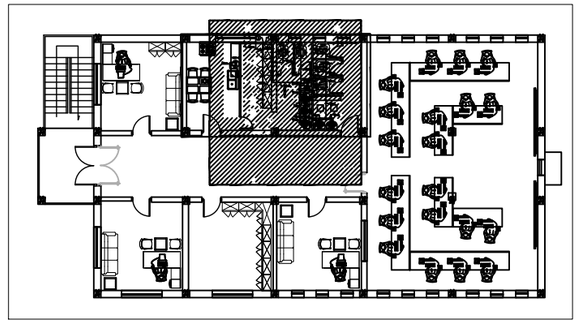

FLOOR PLAN NOTES:

1. ALL EASTERN STYLE WATER CLOSETS IN THIS FACILITY ARE TO HAVE THE FIXTURE DESIGNATION OF W-1. EACH FIXTURE SHALL HAVE A 25mm (1 INCH) COLD WATER LINE EXTENDED TO IT AND THEN BE REDUCED TO 13mm (1/2 INCH) FOR A FINAL CONNECTION TO THE FLUSH TANK AND A 102mm (4) INCH SANITARY CONNECTION.
2. ALL LAV FIXTURES IN THIS FACILITY ARE TO HAVE THE FIXTURE DESIGNATION OF L-1. EACH FIXTURE SHALL HAVE A 13mm (1/2 INCH) COLD WATER, 13mm (1/2 INCH) HOT WATER CONNECTION AND A 76mm (3 INCH) SANITARY CONNECTION.
3. ALL ABLUTION FIXTURES IN THIS FACILITY ARE TO HAVE THE FIXTURE DESIGNATION OF ABL-1. EACH FIXTURE SHALL HAVE A 13mm (1/2 INCH) COLD WATER, 13mm (1/2 INCH) HOT WATER CONNECTION.
4. ALL SHOWERS FIXTURES IN THIS FACILITY ARE TO HAVE THE FIXTURE DESIGNATION OF SH-1. EACH FIXTURE SHALL HAVE A 13mm (1/2 INCH) COLD WATER, 13mm (1/2 INCH) HOT WATER CONNECTION.
5. REFER TO SHEET P501 FOR DETAILS AND SYMBOLS.
6. ALL WATER, SANITARY AND VENT LINES TO BE EXPOSED. RUN LINES TIGHT TO CEILING AND WALL.

1ST FLOOR WATER KEY NOTES:

1. 65mm WATER LINE DOWN EXTENDED FROM ROOF WATER TANK TO GROUND FLOOR FIXTURES
2. 50 mm WATER LINE EXTENDED FORM WATER WELL TO ROOF WATER TANK

PLUMBING SYMBOLS

- SS — SANITARY SEWER PIPING (BELOW GROUND)
- SS — SANITARY SEWER PIPING (ABOVE GROUND)
- VENT PIPING (V)
- COLD WATER PIPING (CW)
- HOT WATER PIPING (HW)
- P — PROPANE LINE
- P — TWO STAGE PRESSURE GAUGE
- BALL VALVE
- BACKFLOW PREVENTER
- OR — CLEANOUT (CO.)
- ROOF PENETRATION

REV No	DESCRIPTION	Date	
3	REVISION	05.29.20	XX
2	100% SUBMITTAL		XX
1	FIRST ISSUE		XX

SCAL 1:20

DATE: 05.29.2020
DESIGNED BY: MOHAMMAD SHAH AOLI
SUBMITTED BY: UNDP/LOTFA
CHECKED BY: MUSLIM RUJMAN
CONTRACT NO.: XX T.O.: 01
APPROVED BY: ASMAHAN ALAWASHEH

UNITED NATIONS DEVELOPMENT PROGRAM
LOTFA PROJECT AFGHANISTAN
KABUL MOI

ENGINEERING DIVISION
PERs PROJECT

UNDP / LOTFA AFGHANISTAN
KABUL, AFGHANISTAN
BUILDING 02 - FIRST FLOOR ENLARGED HOT & COLD WATER PLAN

SHEET NUMBER
P-110

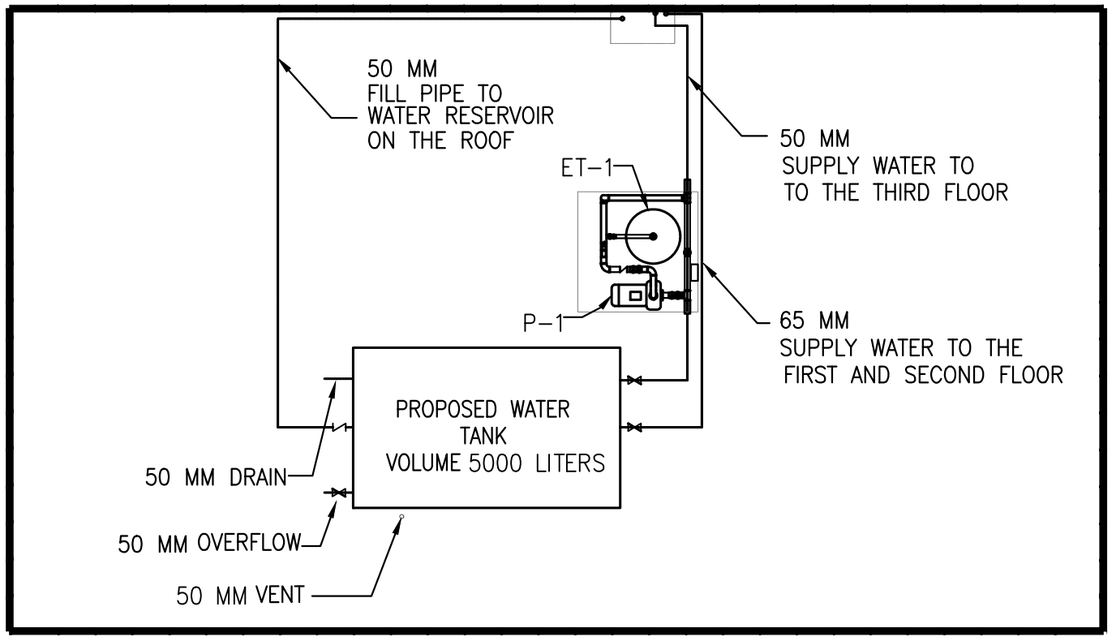

1 / P-111 PROPOSED WATER TANK ROOF - PLUMBING DETAILS
SCALE: 1:20

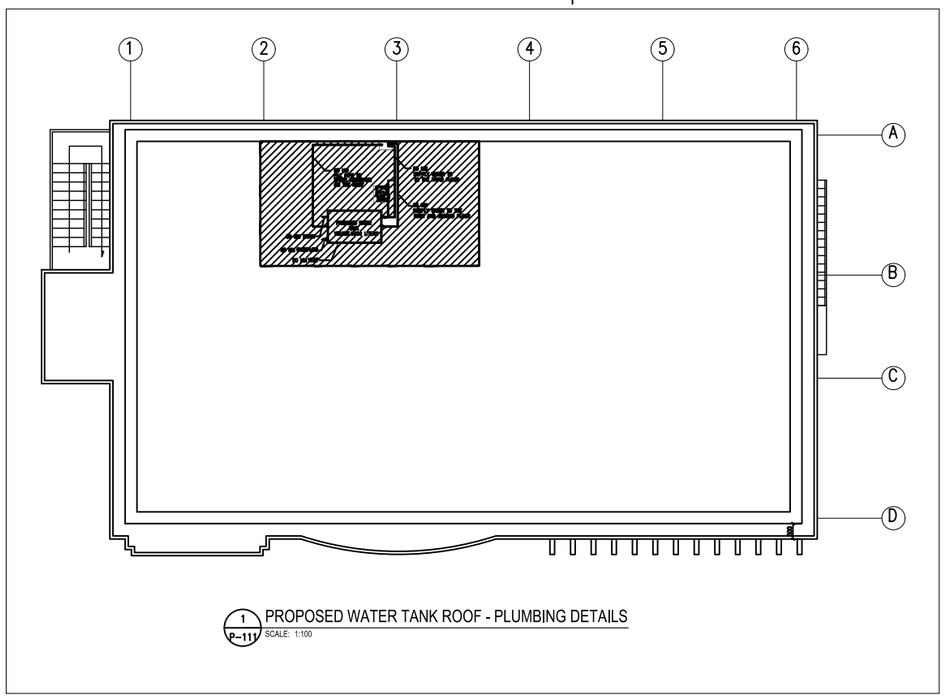

1 / P-111 PROPOSED WATER TANK ROOF - PLUMBING DETAILS
SCALE: 1:100

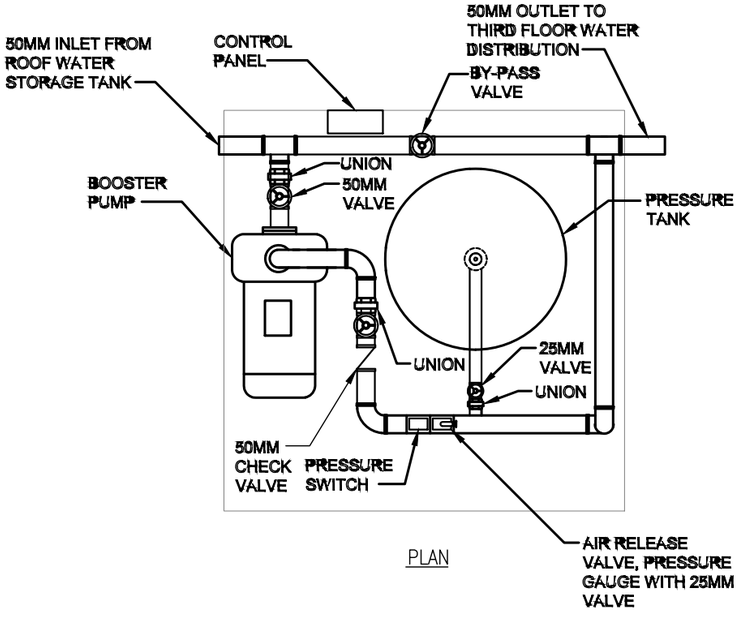

PLAN

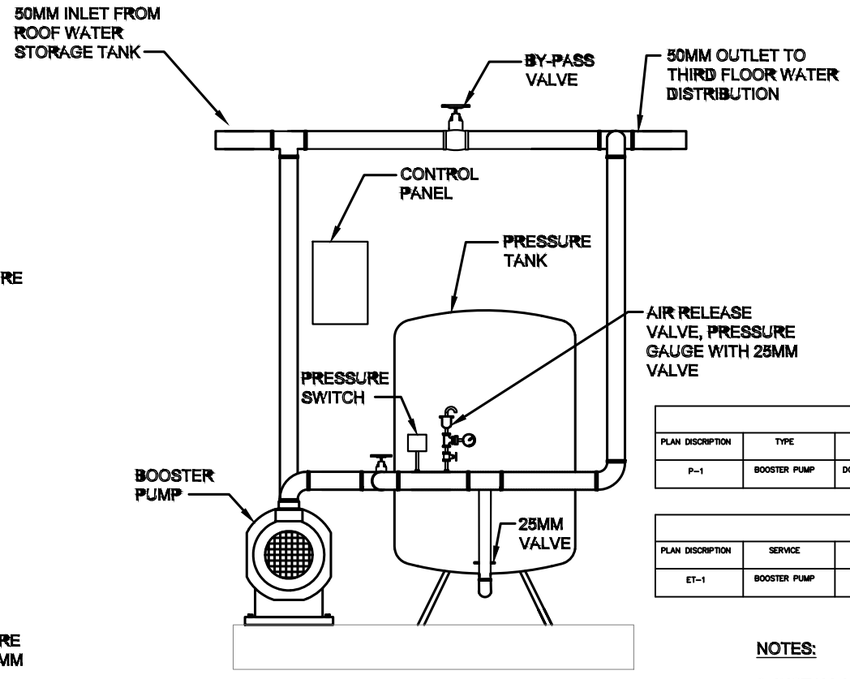

VIEW

2 / P-111 PROPOSED BOOSTER PUMP SET DETAILS
SCALE: NTS

BOOSTER PUMP SCHEDULE							
PLAN DISCRIPTION	TYPE	SERVICE	FLOW RATE (L/M)	OPERATING HEAD (M)	MOTOR POWER (W)	ELECTRICAL (V/HZ/PHASE)	DISCHARGE AND SUCTION SIZES (MM)
P-1	BOOSTER PUMP	DOMESTIC COLD WATER	170	15	750	220/50/1	40

EXPANSION TANK (ET) SCHEDULE							
PLAN DISCRIPTION	SERVICE	TYPE	TANK VOLUME (L)	ACCEPTANCE VOLUME (L)	TANK RATED PRESSURE (BAR)	MAX RELIEF PRESSURE (kPa)	MIN. SYSTEM PRESSURE (kPa)
ET-1	BOOSTER PUMP	BLADDER	100	100	5	517	103.4

NOTES:

1- INSTALL WATER BOOSTER PUMP PER MANUFACTURER INSTRUCTIONS.
2. PUMP SET SHALL BE EQUIPPED WITH MANUAL AND AUTO ON/OFF CONTROL.
3. PUMP SHALL BE SET TO INCREASE INCOMING WATER PRESSURE BY 1.4 BAR.

REV No	DESCRIPTION	Date
3		
2		
1	FIRST ISSUE	05.05.20
	100% SUBMITTAL	XX
		XX
		XX
		APPROVED

SCAL 1:20

DESIGNED BY: MOHAMMAD SHAH AQIL
DATE: 05.05.2020
CHECKED BY:
SUBMITTED BY: UNDP/LOTFA
APPROVED BY:
CONTRACT NO.: XX
T.O.: 01

UNITED NATIONS DEVELOPMENT PROGRAM
LOTFA PROJECT AFGHANISTAN
KABUL MOI

ENGINEERING DIVISION
PERs PROJECT

UNDP / LOTFA AFGHANISTAN
KABUL, AFGHANISTAN
BUILDING 02 - ROOF WATER SUPPLY ENLARGED PLAN AND DETAILS

SHEET NUMBER
P-111

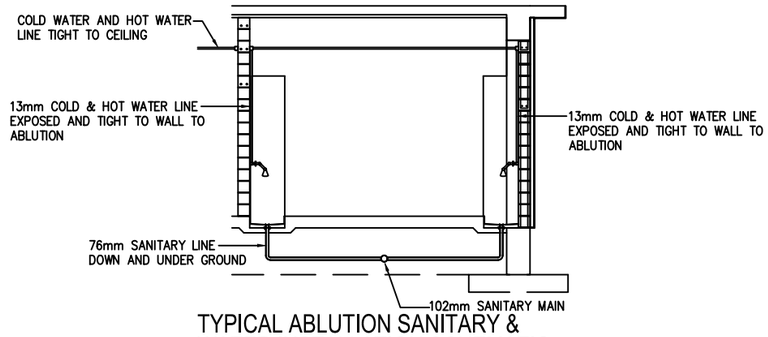

TYPICAL ABLUTION SANITARY & WATER INSTALLATION SCHEMATIC

SCALE: N.T.S.

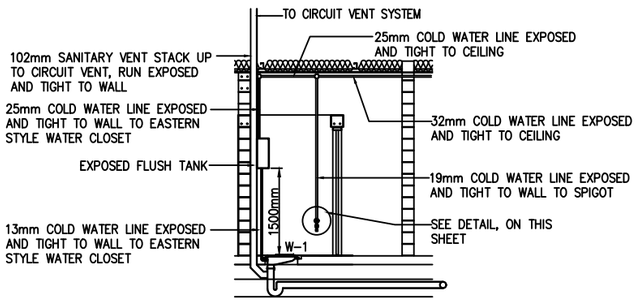

TYPICAL EASTERN STYLE WATER CLOSET SANITARY & WATER INSTALLATION SCHEMATIC

SCALE: N.T.S.

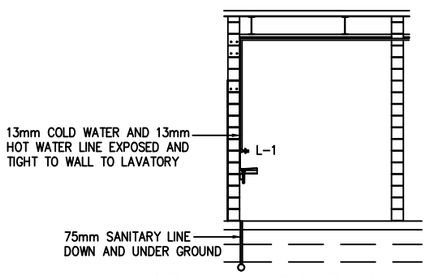

TYPICAL LAVATORY SANITARY & WATER INSTALLATION SCHEMATIC

SCALE: N.T.S.

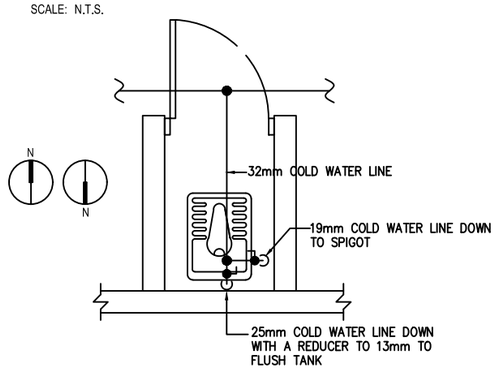

TYPICAL EASTERN STYLE WATER CLOSET WITH SPIGOT WATER PIPING DETAIL

SCALE: N.T.S.

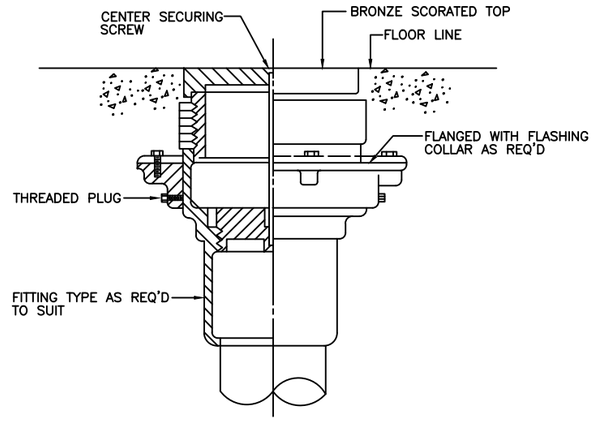

TYPICAL FLOOR CLEANOUT DETAIL

SCALE: N.T.S.

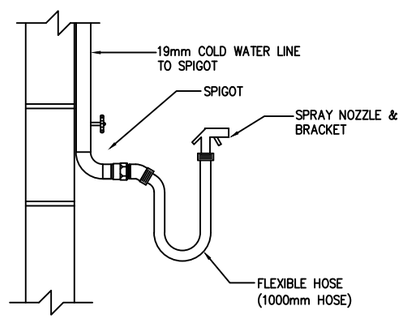

TYPICAL DETAIL - SPIGOT, FLEXIBLE HOSE, AND SPRAY NOZZLE

SCALE: N.T.S.

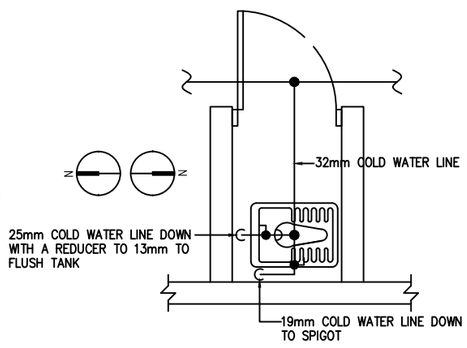

TYPICAL EASTERN STYLE WATER CLOSET WITH SPIGOT WATER PIPING DETAIL

SCALE: N.T.S.

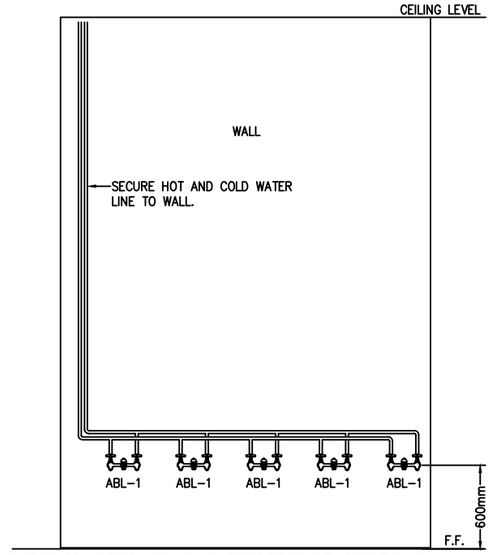

TYPICAL ABLUTION ELEVATION PLUMBING PLAN - WATER INSTALLATION SCHEMATIC

SCALE: N.T.S.

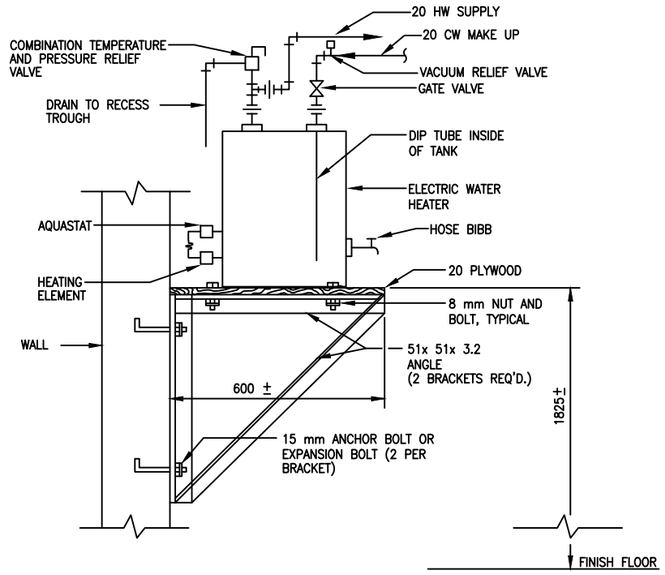

WALL MOUNTED ELECTRIC WATER HEATER DETAIL

SCALE: N.T.S.

REV No	DESCRIPTION	Date
3	REVISION	05.29.20
2	100% SUBMITTAL	XX
1	FIRST ISSUE	XX
		APPROVED

SCAL 1:100

DESIGNED BY: MOHAMMAD SHAH ADLI
DATE: 05.29.2020
CHECKED BY: MUSLIM RUHAN
SUBMITTED BY: UNOPS LOTFA
APPROVED BY: ASMAHAN ALAMBINSHEH
CONTRACT NO.: XX T.O. 01

UNITED NATIONS DEVELOPMENT PROGRAM
LOTFA PROJECT AFGHANISTAN
KABUL MOI

ENGINEERING DIVISION
PERs PROJECT

UNDP / LOTFA AFGHANISTAN
KABUL, AFGHANISTAN
BUILDING 02 - PLUMBING DETAILS

SHEET NUMBER
P-501

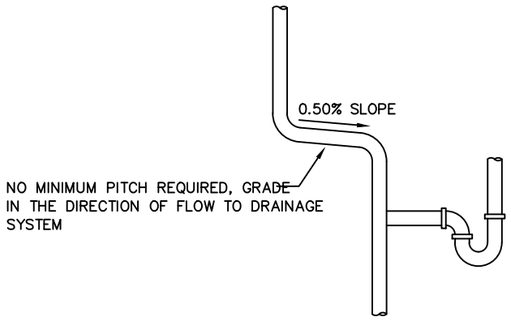

TYPICAL VENT GRADE DETAILS

SCALE: N.T.S.

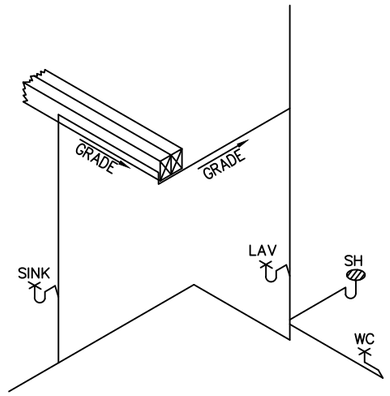

TYPICAL VENT GRADE DETAILS

SCALE: N.T.S.

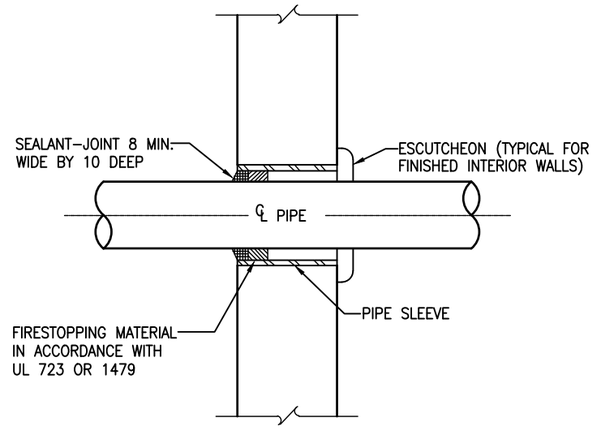

TYPICAL WALL PENETRATION DETAIL

SCALE: N.T.S.

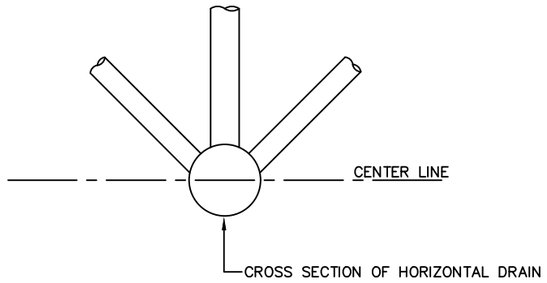

ACCEPTABLE VENT CONNECTIONS TO HORIZONTAL DRAIN - DETAIL

SCALE: N.T.S.

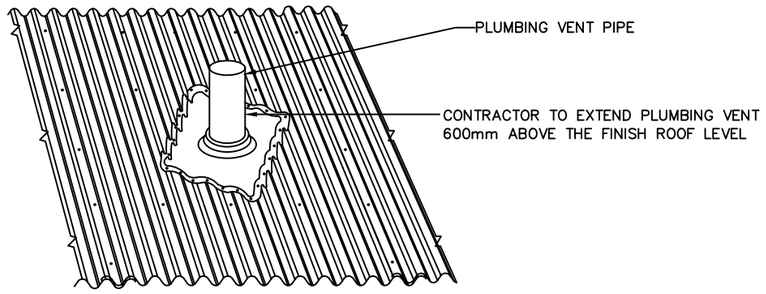

PLUMBING VENT THRU ROOF DETAIL

SCALE: NTS

FIXTURE LIST

TYPE	ITEM	SOIL & WASTE	VENT	COLD WATER	HOT WATER	REMARKS	REMARKS 2
W–1	EASTERN STYLE WATER CLOSET	102mm	51mm	13mm	------	FLUSH TANK	LOW FLOW EFFICIENT TYPE
L–1	WALL HUNG LAV FIXTURE	38mm	38mm	13mm	13mm	-------	LOW FLOW EFFICIENT TYPE
S–1	WALL HUNG SINK	38mm	38mm	13mm	13mm	-------	LOW FLOW EFFICIENT TYPE

ELECTRICAL WATER HEATER SCHEDULE

ITEM NO.	CAPACITY (LIT.)	HEATING ELEMENT (KW)	ELECTRIC V./PH.	WATER CONNECT	MANUFACTURER & MODEL	REMARKS
HWH–1	30	1.5	220/1	15mm	ZENITH OR EQUIVALENT	WALL– HUNG
HWH–2	50	2.0	220/1	15mm	ZENITH OR EQUIVALENT	WALL– HUNG
HWH–3	100	3	220/1	15mm	ZENITH OR EQUIVALENT	WALL– HUNG

REV No	DESCRIPTION	Date	APPROVED
3	REVISION	05.29.20	XX
2	100% SUBMITTAL	XX	XX
1	FIRST ISSUE	XX	XX

SCAL
NTS

UNITED NATIONS DEVELOPMENT PROGRAM
LOTFA PROJECT AFGHANISTAN
KABUL MOI

ENGINEERING DIVISION
PERs PROJECT

DESIGNED BY: MOHAMMAD SHAH ADIL	DATE: 05.29.2020
CHECKED BY: MUSLIM RUHAN	SUBMITTED BY: UNDP/LOTFA
APPROVED BY: ASMAHAN ALAWAISHEH	CONTRACT NO: XX T.O. 01

UNDP / LOTFA AFGHANISTAN
KABUL, AFGHANISTAN
BUILDING 02 - PLUMBING DETAILS

SHEET NUMBER
P–502

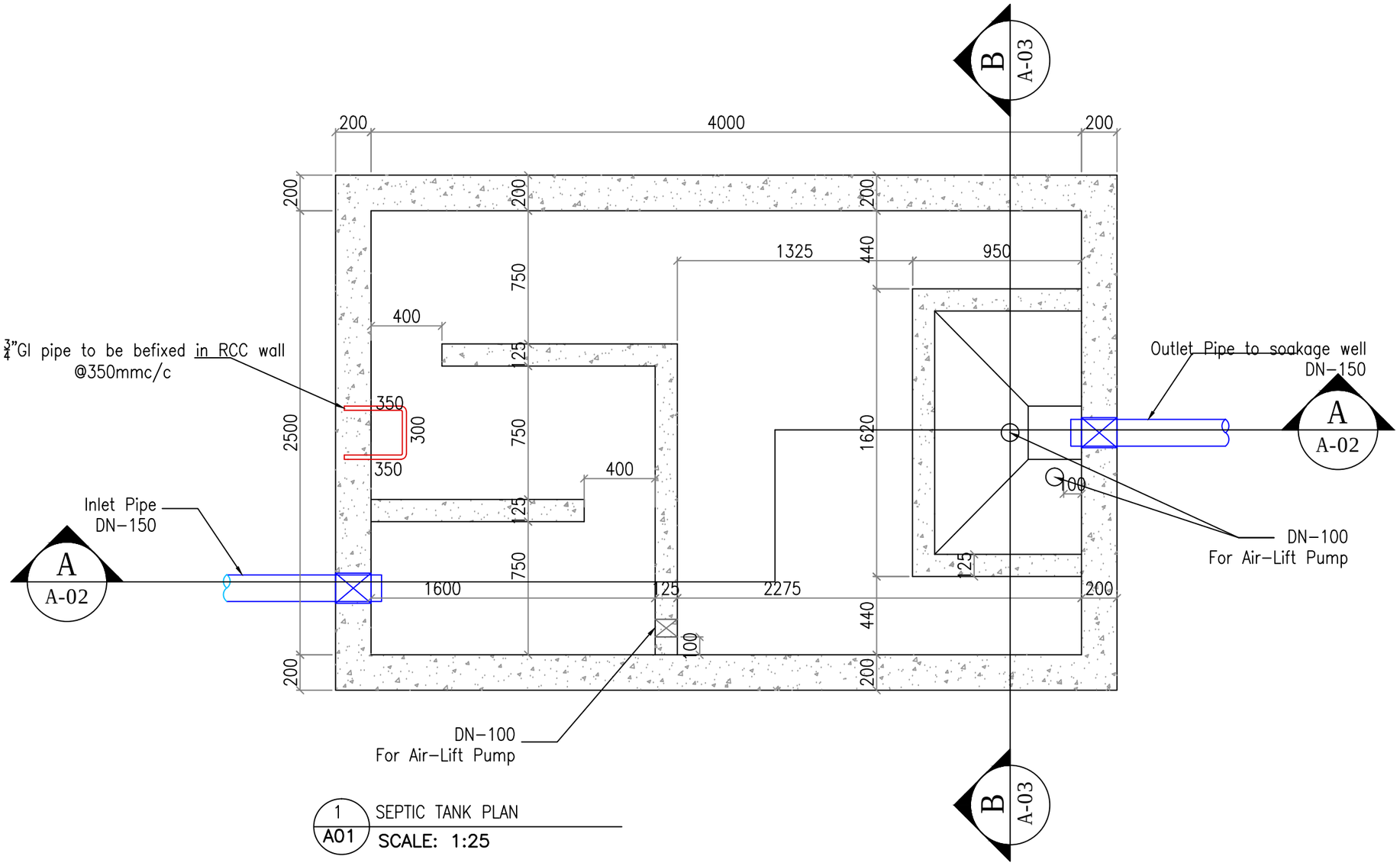

1 / A01 SEPTIC TANK PLAN

SCALE: 1:25

REV No	DESCRIPTION	Date	APPROVED
3	REVISION	03.02.20	XX
2	100% SUBMITTAL		XX
1	FIRST ISSUE		XX

SCAL 1:25

DATE : 03.03.2020
DESIGNED BY : FERDAT
CHECKED BY : ASMAN ALWASIEH
APPROVED BY : MUSLIM RUHAN
SUBMITTED BY : UNDPLOTFA
CONTRACT NO : T.O. 01

UNITED NATIONS DEVELOPMENT PROGRAM
LOTFA PROJECT AFGHANISTAN
KABUL MOI

ENGINEERING DIVISION
PERs PROJECT

UNDP / LOTFA AFGHANISTAN
KABUL, AFGHANISTAN
BUILDING 02- PH□
SEPTIC FLOOR PLAN

SHEET NUMBER
A-101

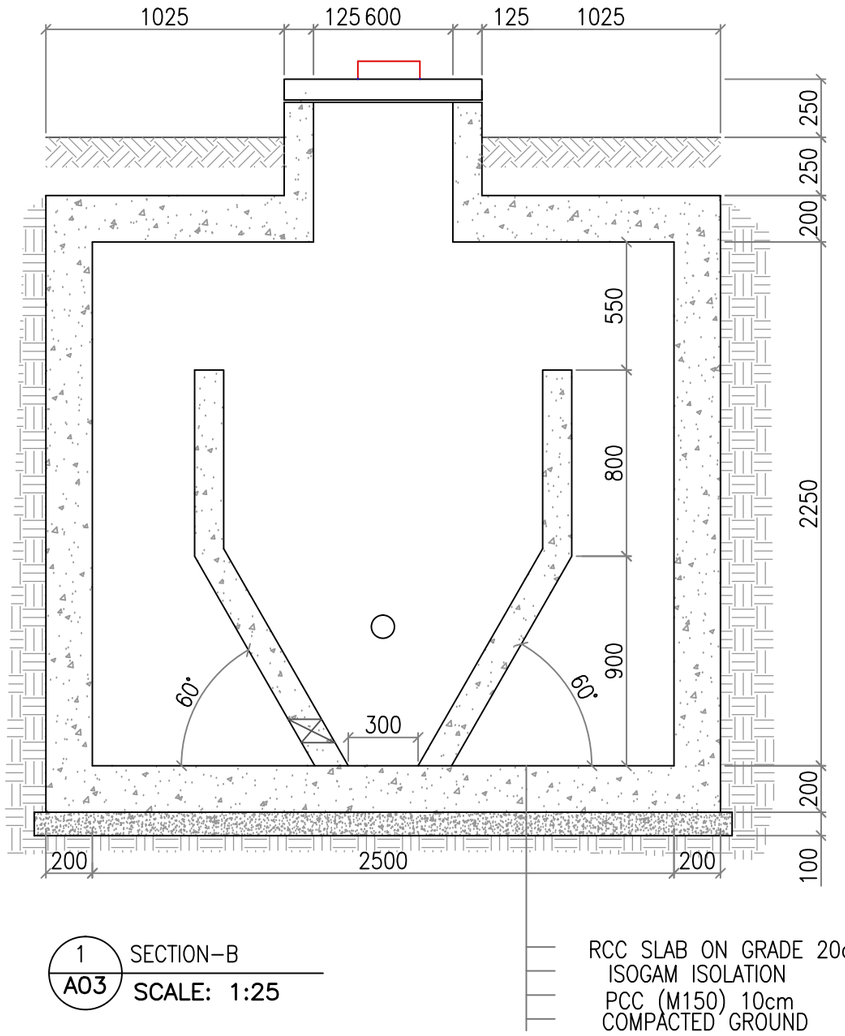

1 / A03 SECTION–B
SCALE: 1:25

REV No	DESCRIPTION	Date	APPROVED
3	REVISION	03.02.20	XX
2	100% SUBMITTAL		XX
1	FIRST ISSUE		XX

SCAL 1:25

DESIGNED BY : FERDAT
DATE : 03. 03. 2020
CHECKED BY : ASMAHAN ALWAISIEH
SUBMITTED BY : UNDPLOTFA
APPROVED BY : MUSLIM RAHMAN
CONTRACT NO : XXT.O.: 01

UNITED NATIONS DEVELOPMENT PROGRAM
LOTFA PROJECT AFGHANISTAN
KABUL MOI

ENGINEERING DIVISION
PERs PROJECT

UNDP / LOTFA AFGHANISTAN
KABUL, AFGHANISTAN
BUILDING 02 - PH□
SECTION B-B

SHEET NUMBER
A-103

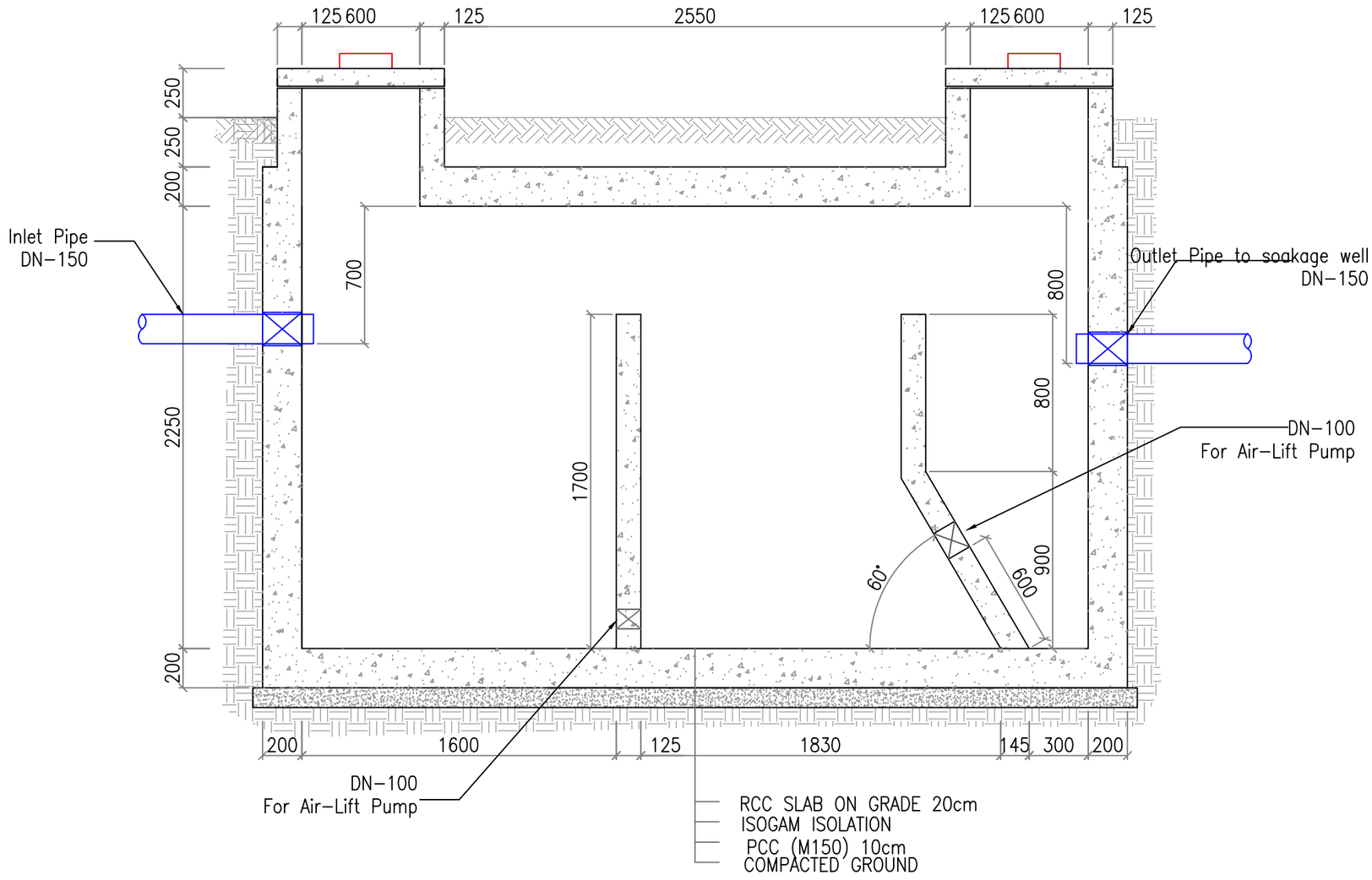

2 A02 SECTION-A
SCALE: 1:25

REV No	DESCRIPTION	Date	APPROVED
3	REVISION	03.02.20	XX
2	100% SUBMITTAL		XX
1	FIRST ISSUE		XX

SCAL 1:100

DESIGNED BY: FERDAT
CHECKED BY: ASMAHAN ALWASIEH
APPROVED BY: MUSLIM RAHMAN
DATE: 03.03.2020
SUBMITTED BY: UNDP/LOTFA
CONTRACT NO.: T.O.: 01

UNITED NATIONS DEVELOPMENT PROGRAM
LOTFA PROJECT AFGHANISTAN
KABUL MOI

ENGINEERING DIVISION
PERs PROJECT

UNDP / LOTFA AFGHANISTAN
KABUL, AFGHANISTAN
BUILDING 02 - PH□
SECTION A-A

SHEET NUMBER
A-102

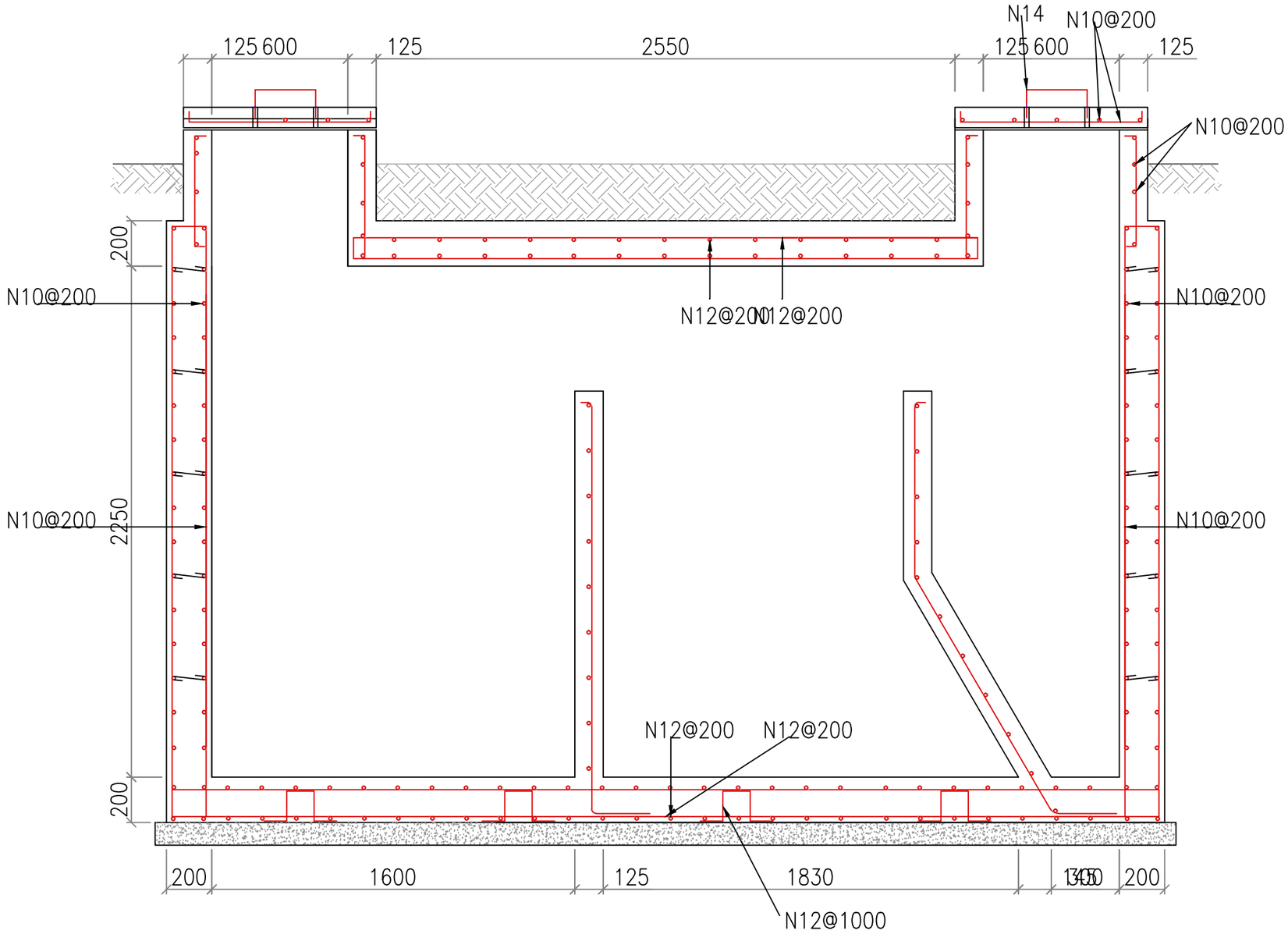

1 SC01 REINFORCEMENT DETAILS
SCALE: 1:25

REV No	DESCRIPTION	Date	APPROVED
3	REVISION	03.02.20	XX
2	100% SUBMITTAL		XX
1	FIRST ISSUE		XX

SCAL 1:25

DESIGNED BY : FERDAT
DATE : 03.03.2020
CHECKED BY : ASMAHAN ALWAISHEH
SUBMITTED BY : UNDPLOTFA
APPROVED BY : MUSLIM RAHMAN
CONTRACT NO : T.O.: 01

UNITED NATIONS DEVELOPMENT PROGRAM
LOTFA PROJECT AFGHANISTAN
KABUL MOI

ENGINEERING DIVISION
PERs PROJECT

UNDP / LOTFA AFGHANISTAN
KABUL, AFGHANISTAN
BUILDING 02- PH□
GROUND FLOOR PLAN

SHEET NUMBER
SC-01

PROJECT: UNDP/ LUTFA KABUL AFGHANISTAN PHQ BUILDING
BUILDING RENOVATION REFERENCES SHEET

ARCHITECTURAL DRAWINGS

NO	DRAWING NAME	PAGES NUMBER
1	COVER PAGE	A-100
2	SITE PLAN	A-101A
3	EXISTING GROUND FLOOR PLAN	A-101
4	EXISTING FIRST FLOOR PLAN	A-102
5	PROPOSED GROUND FLOOR PLAN	A-103
6	PROPOSED FIRST FLOOR PLAN	A-104
7	ROOF PLAN	A-105
8	SECTION	A-106
9	WOODEN DOORS DETAILS	A-107
10	PVC DOORS DETAIL	A-108
11	PVC WINDOWS DETAIL	A-109
12	BLAST PROOF WINDOWS DETAIL	A-109A
13	STEEL DOORS DETAIL	A-110
14	DOORS AND WINDOWS SCHEDULE	A-110A
15	TOILETS ENLARGE PLAN	A-111
16	KITCHEN CABINET DETAIL	A-112
17	TOILETS ENLARGE PLAN	A-113
18	TOILETS ENLARGE PLAN	A-114
19	STEEL LOCKER DETAIL	A-115
20	CLOTHS CABINET DETAIL	A-116
21	WORKS STATION VIEW & SECTION	A-117
22	OFFICE CABINET ENLAEGE PLAN	A-117A
23	DOUBLE BEDS DETAIL	A-118
24	STEEL STAIR DETAIL	A-119
25	RAISE FLOOR DETAILS	A-120
26	RAISE FLOOR DETAIL	A-121
27	ACOUSTIC WALLS DETAILS	A-122
28	CALL CENTER SECTION	A-123
29	GROUND FLOOR LIFE SAFETY PLAN	A-124
30	FIRST FLOOR LIFE SAFETY PLAN	A-125

ELECTRICAL DRAWINGS

NO	DRAWING NAME	PAGES NUMBER
1	GENERAL ELECTRICAL LEGEND & NOTES	E-00-20
2	GROUND FLOOR LIGHTING PLAN	E-01-20
3	FIRST FLOOR LIGHTING PLAN	E-02-20
4	GROUND FLOOR POWER PLAN	E-03-20
5	FIRST FLOOR POWER OUTLET PLAN	E-04-20
6	GROUND FLOOR PLAN, AC, & EXHAUST FAN	E-05-20
7	FIRST FLOOR PLAN, AC, & EXHAUST FAN	E-06-20
8	GROUND FLOOR PLAN SMOKE ALARM	E-07-20
9	FIRST FLOOR PLAN SMOKE ALARM	E-08-20
10	GROUND FLOOR NETWORKING PLAN	E-09-20
11	FIRST FLOOR PLAN NETWORKING PLAN	E-10-20
12	Panel Schedule Ground Floor	E-11-20
13	Panel Schedule Ground Floor Solar	E-12--20
14	Panel Schedule FIRST Floor	E-13-20
15	Panel Schedule First Floor Solar	E-14-20
16	MPB Panel Schedule Ground Floor	E-15-20
17	ELECTRICAL INSTALLATION DETAILS	E-16-20
18	ELECTRICAL INSTALLATION DETAILS	E-17-20
19	ELECTRICAL INSTALLATION DETAILS	E-18-20
20	ELECTRICAL INSTALLATION DETAILS	E-19-20

MECHANICAL DRAWINGS

NO	DRAWING NAME	PAGES NUMBER
1	HAVC GROUND FLOOR PLAN	M-101
2	HAVC FIRST FLOOR PLAN	M-102
3	HAVC SCHEDULE	M-103
4	HAVC DETAILS	M-105
5	PLUMBING (SANITARY) GROUND FLOOR PLAN	P-101
6	PLUMBING (SANITARY) GROUND ENLARGE PLAN	P-102
7	SEWAGE GROUND ENLARGE PLAN	P-103
8	SEWAGE GROUND ENLARGE PLAN	P-104
9	PLUMBING (SANITARY) GROUND ENLARGE PLAN	P-105
10	PLUMBING (SANITARY) FIRST ENLARGE PLAN	P-106
11	PLUMBING (SANITARY) FIRST ENLARGE PLAN	P-107
12	PLUMBING (SANITARY) FIRST ENLARGE PLAN	P-108
13	PLUMBING (SANITARY) FIRST ENLARGE PLAN	9-109
14	PLUMBING (SANITARY) FIRST ENLARGE PLAN	P-110
15	PLUMBING (SANITARY) DETAILS	P-501
16	PLUMBING (SANITARY) DETAILS	P-502

REV No	DESCRIPTION	Date	APPROVED
3	REVISION	05.03.20	XX
2	100% SUBMITTAL		XX
1	FIRST ISSUE		XX

SCALE 1:100

DATE: 02.09.2020
DESIGNED BY: XX
CHECKED BY: XX
APPROVED BY: XX
SUBMITTED BY: UNDP/LOTFA
CONTRACT NO.: XX T.O. 01

UNITED NATIONS DEVELOPMENT PROGRAM
LOTFA PROJECT AFGHANISTAN
KABUL MOI

ENGINEERING DIVISION
PERs PROJECT

UNDP / LOTFA AFGHANISTAN
KABUL, AFGHANISTAN
BUILDING 02 - PHQ
REFERENCE SHEET

SHEET NUMBER
A–000

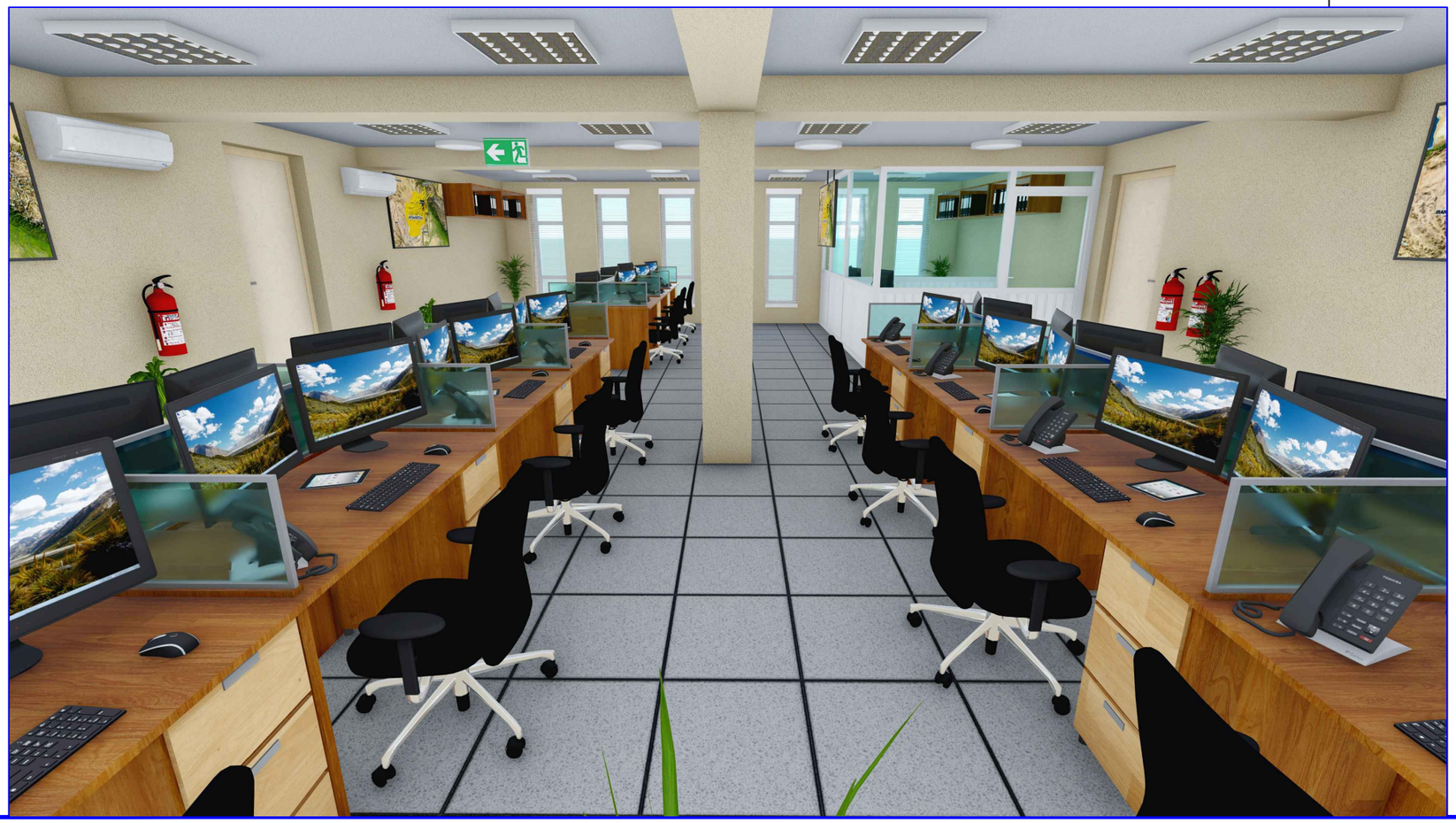

100% ARCHITECTURAL DESIGN SUBMITTAL

PROJECT: UNDP/ LUTFA

PHQ BUILDING ARCHITECTURAL DRAWINGS

KABUL , AFGHANISTAN

DATE: MARCH-09-2020

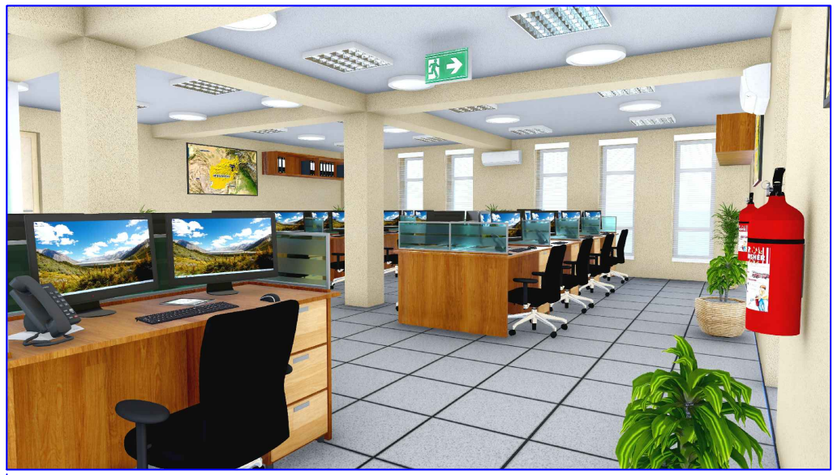

REV No	DESCRIPTION	Date	APPROVED
3	REVISION	05.03.20	XX
2	100% SUBMITTAL		XX
1	FIRST ISSUE		XX

SCALE 1:100

DATE: 02.09.2020
SUBMITTED BY: UNDP/LOTFA
CONTRACT NO.: XX T.O.: 01

DESIGNED BY: XX
CHECKED BY: XX
APPROVED BY: XX

UNITED NATIONS DEVELOPMENT PROGRAM
LOTFA PROJECT, AFGHANISTAN
KABUL MOI

ENGINEERING DIVISION

PERs PROJECT

UNDP / LOTFA AFGHANISTAN

KABUL, AFGHANISTAN

BUILDING 02 - PHQ
COVER PAGE

SHEET NUMBER
A–100

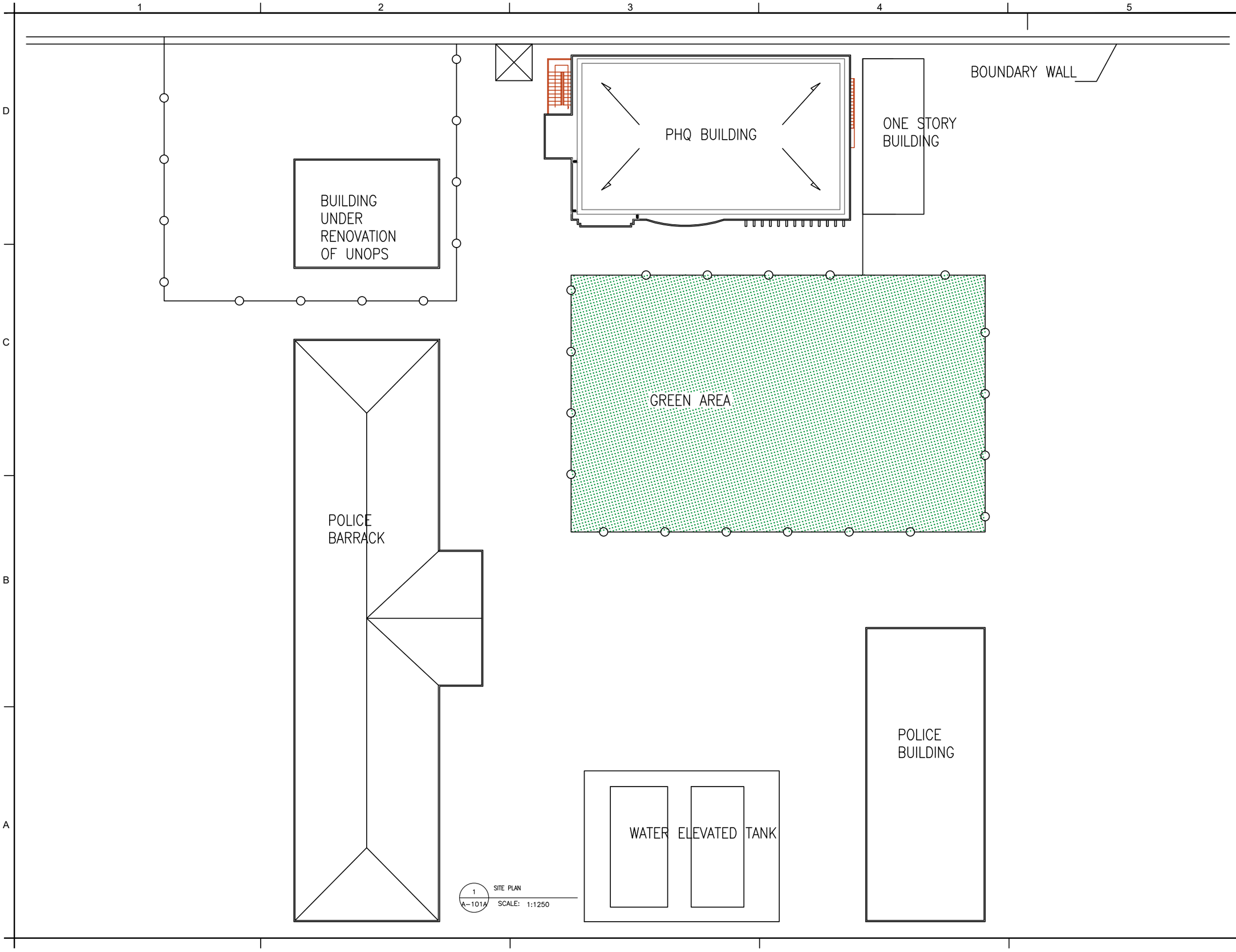

REV No.	DESCRIPTION	Date	APPROVED
3	REVISION	05.03.20	XX
2	100% SUBMITTAL		XX
1	FIRST ISSUE		XX

SCALE 1:250

DATE: 02.09.2020
SUBMITTED BY: UNDP/LOTFA
CONTRACT NO.: XX T.O.: 01

DESIGNED BY: XX
CHECKED BY: XX
APPROVED BY: XX

UNITED NATIONS DEVELOPMENT PROGRAM
LOTFA PROJECT AFGHANISTAN
KABUL MOI

ENGINEERING DIVISION
PERs PROJECT

UNDP / LOTFA AFGHANISTAN
KABUL, AFGHANISTAN
BUILDING 02 - PHQ
EXISTING SITE PLAN

SHEET NUMBER
A-101A

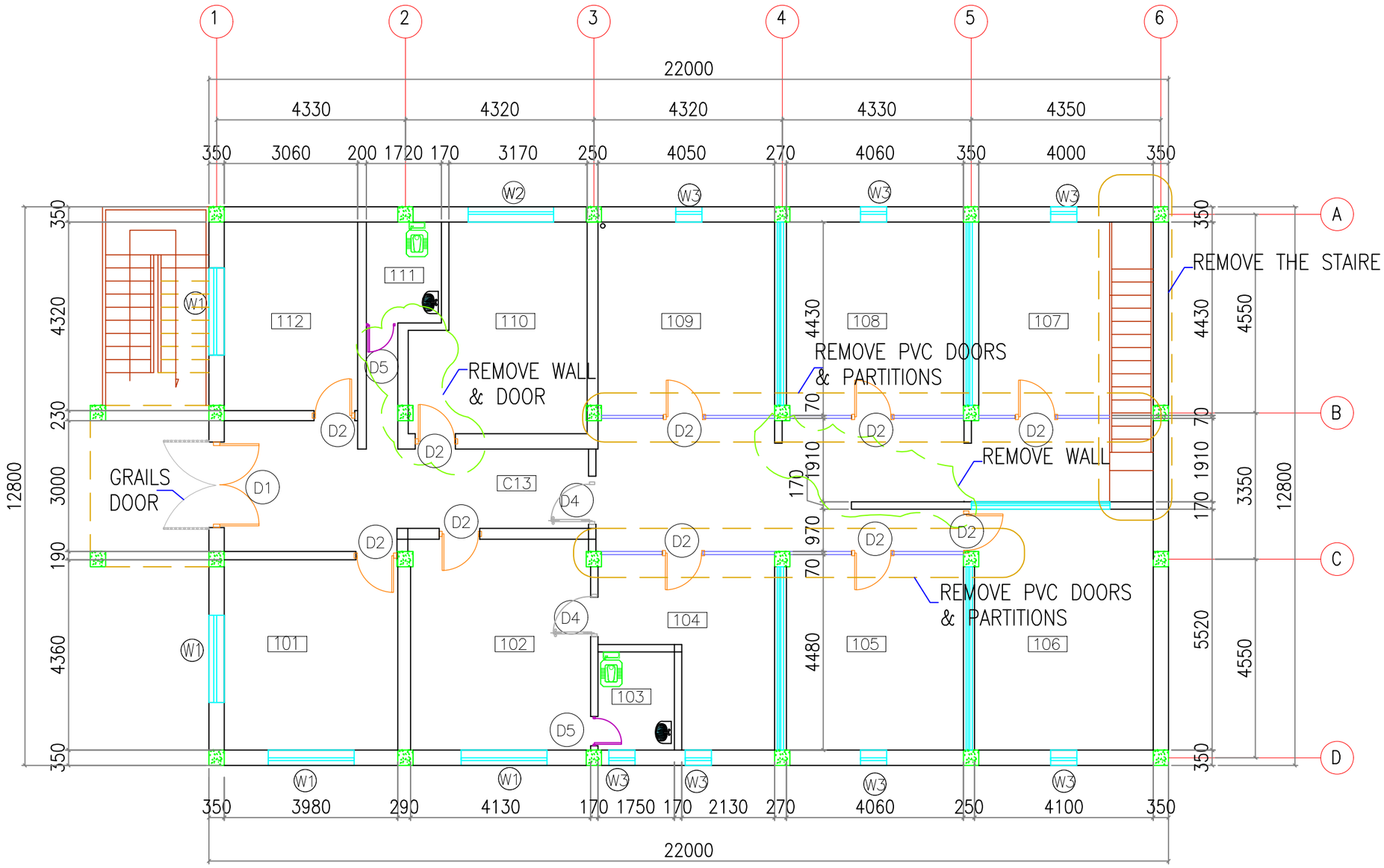

1 / A–101 EXISTING GROUND FLOOR PLAN

SCALE: 1:100

REV No.	DESCRIPTION	Date	APPROVED
3	REVISION	05.03.20	XX
2	100% SUBMITTAL	XX	XX
1	FIRST ISSUE	XX	XX

SCALE 1:100

DATE: 02.09.2020
SUBMITTED BY: UNDP/LOTFA
CONTRACT NO.: XX T.O. 01
DESIGNED BY: XX
CHECKED BY: XX
APPROVED BY: XX

UNITED NATIONS DEVELOPMENT PROGRAM
LOTFA PROJECT AFGHANISTAN
KABUL MoI

ENGINEERING DIVISION
PERs PROJECT

UNDP / LOTFA AFGHANISTAN
KABUL, AFGHANISTAN
BUILDING 02 - PHQ
EXISTING GROUND FLOOR PLAN

SHEET NUMBER
A–101

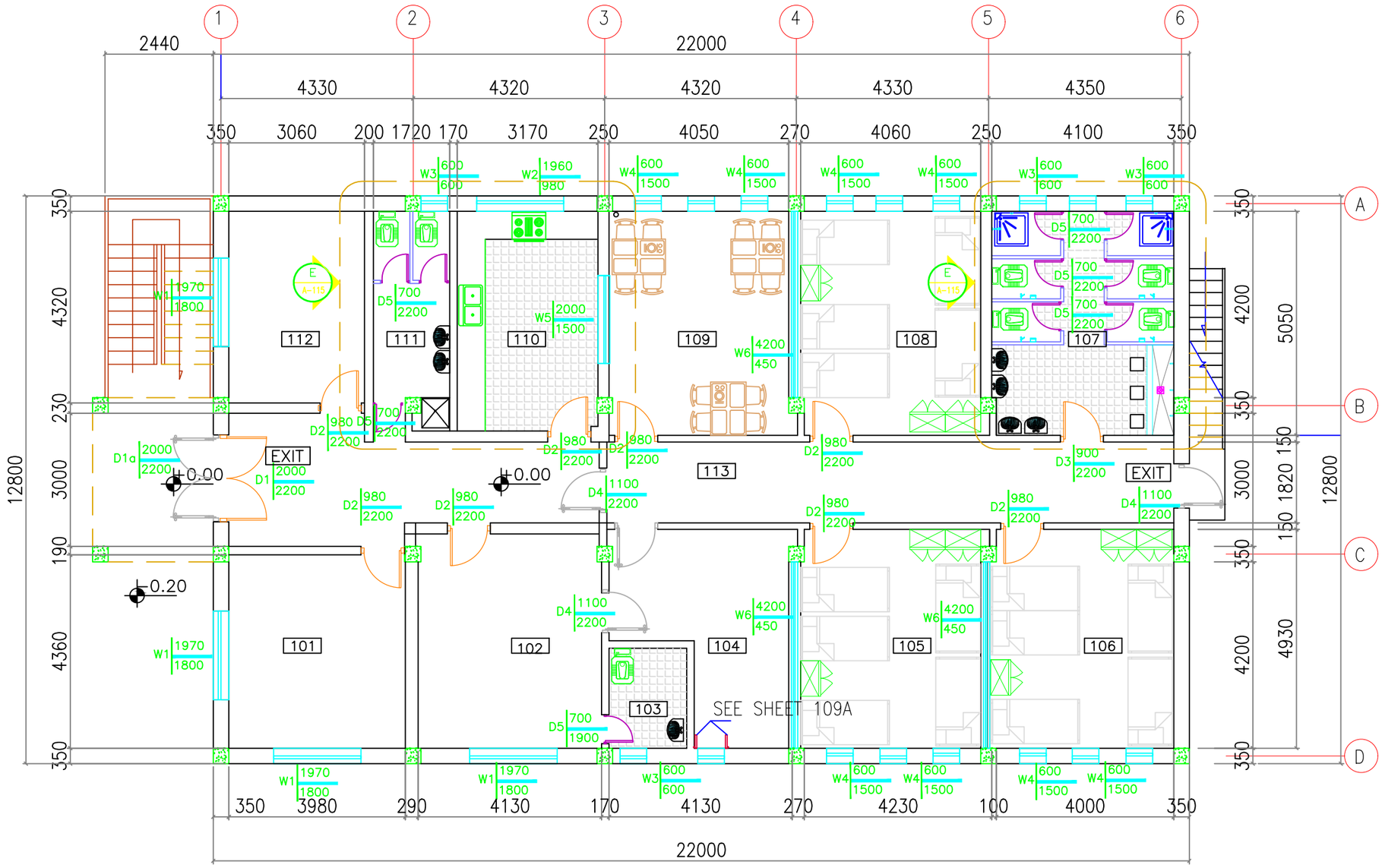

LEGENT

101–OFFICE 17.35 SQM

102–OFFICE 19.95 SQM

103–STORAGE 3.93 sqm

104–BUNKER 16.23 sqm

105–SLEEPING Room 20.6 sqm

106–SLEEPING Room 20.6 sqm

107–TOILET SHOWERS 20.6 sqm

108–SLEEPING ROOM 20.38 sqm

109–DINING ROOM 16.37 sqm

110–KITCHEN 15.7 sqm

111–TOILET 4 sqm

112–OFFICE 15.22 sqm

113–CORRIDOR 43.7 sqm

1 / A–103 PROPOSE GROUND FLOOR PLAN

SCALE: 1:100

REV No	DESCRIPTION	Date	APPROVED
3	REVISION	05.03.20	XX
2	100% SUBMITTAL	XX	XX
1	FIRST ISSUE	XX	XX

SCALE 1:100

DATE: 02.09.2020
SUBMITTED BY: UNDP/LOTFA
CONTRACT NO.: XX T.O. 01
DESIGNED BY: XX
CHECKED BY: XX
APPROVED BY: XX

UNITED NATIONS DEVELOPMENT PROGRAM
LOTFA PROJECT AFGHANISTAN
KABUL MOI

ENGINEERING DIVISION
PERs PROJECT

UNDP / LOTFA AFGHANISTAN
KABUL, AFGHANISTAN
BUILDING 02 - PHQ
GROUND FLOOR PLAN

SHEET NUMBER
A–103

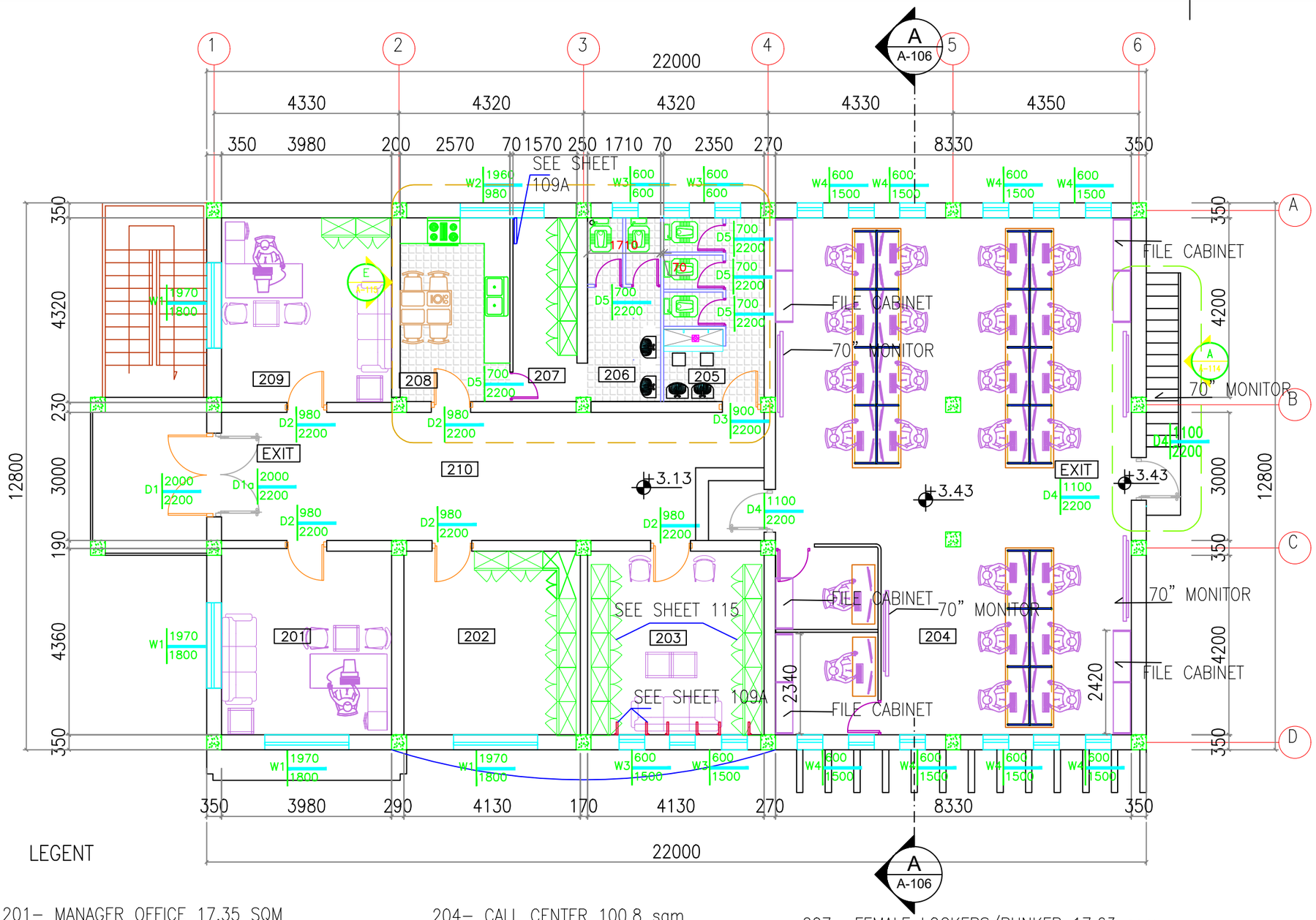

LEGENT

201– MANAGER OFFICE 17.35 SQM

202– ARCHIVE 17.8 SQM

203– MALE LOCKER/BUNKER 17.63sqm

204– CALL CENTER 100.8 sqm

205– MALE TOILET 7 sqm

206– FEMALE TOILET 10.6 sqm

210– CORRIDOR 38.1 sqm

207– FEMALE LOCKERS/BUNKER 17,63 sqm

208– FEMALE KITCHEN 17.35 sqm

209– DEPUTY OFFICE 17.35 sqm

1 / A–104 PROPOSE FIRST FLOOR PLAN

SCALE: 1:100

REV No	DESCRIPTION	Date	APPROVED
3	REVISION	05.03.20	XX
2	100% SUBMITTAL	XX	XX
1	FIRST ISSUE	XX	XX

SCALE 1:100

DATE: 02.09.2020
SUBMITTED BY: UNDP/LOTFA
CONTRACT NO.: XX T.O.: 01
DESIGNED BY: XX
CHECKED BY: XX
APPROVED BY: XX

UNITED NATIONS DEVELOPMENT PROGRAM
LOTFA PROJECT AFGHANISTAN
KABUL MOI

ENGINEERING DIVISION
PERs PROJECT

UNDP / LOTFA AFGHANISTAN
KABUL, AFGHANISTAN
BUILDING 02 - PHQ
FIRST FLOOR PLAN

SHEET NUMBER
A–104

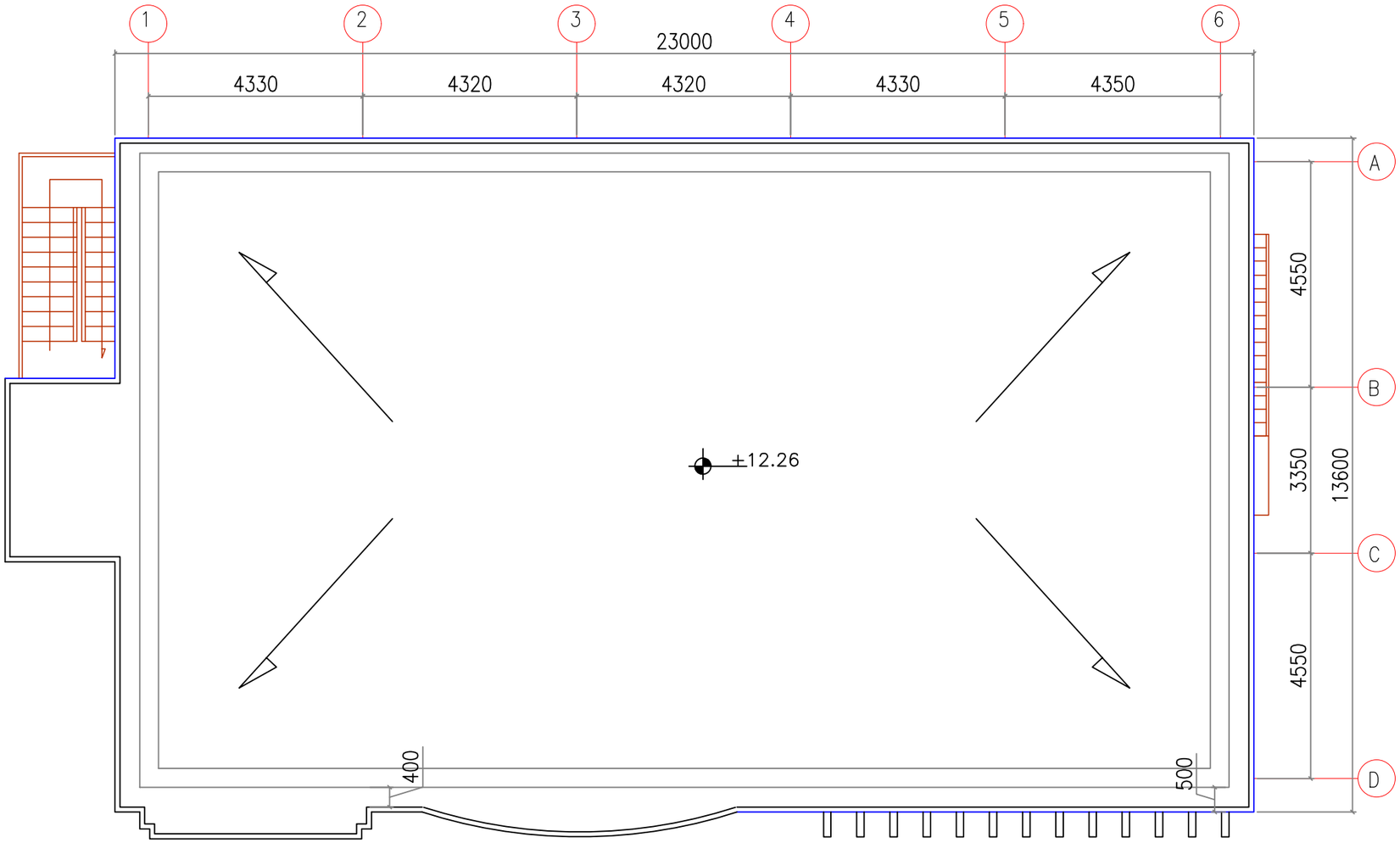

1
AR105

PROPOSE ROOF FLOOR PLAN

SCALE: 1:100

REV No.	DESCRIPTION	Date	APPROVED
3	REVISION	05.03.20	XX
2	100% SUBMITTAL		XX
1	FIRST ISSUE		XX

SCALE 1:100

DATE: 02.09.2020
SUBMITTED BY: UNDP/LOTFA
CONTRACT NO.: XX T.O.: 01

DESIGNED BY: XX
CHECKED BY: XX
APPROVED BY: XX

UNITED NATIONS DEVELOPMENT PROGRAM
LOTFA PROJECT AFGHANISTAN
KABUL MOI

ENGINEERING DIVISION
PERs PROJECT

UNDP / LOTFA AFGHANISTAN
KABUL, AFGHANISTAN
BUILDING 02 - PHQ
ROOF PLAN

SHEET NUMBER
A–105

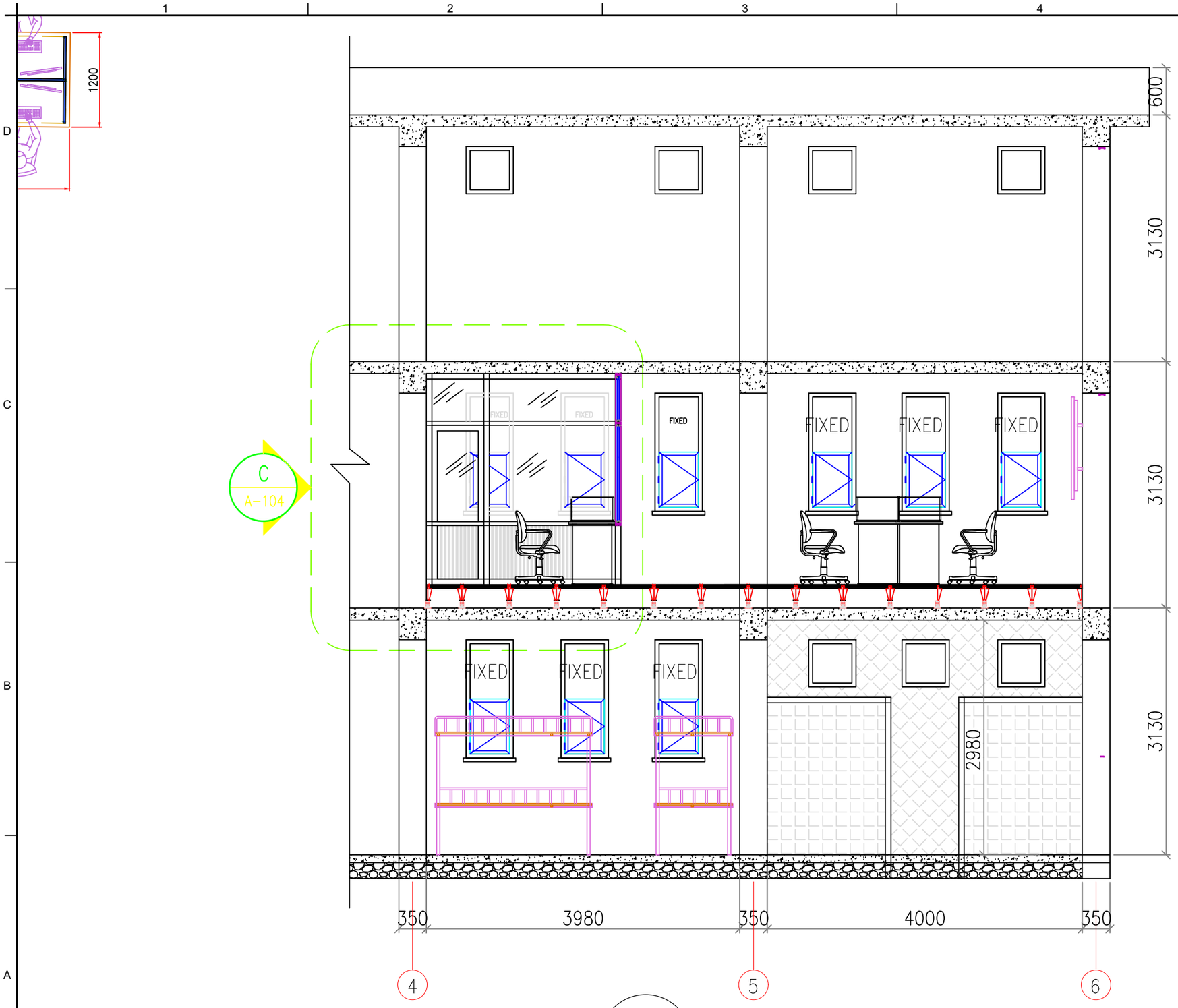

1 / A-106B SECTION B-B
SCALE: 1:50

SCALE	REV No	DESCRIPTION	Date	APPROVED
1:50	3	REVISION	05.03.20	XX
	2	100% SUBMITTAL		XX
	1	FIRST ISSUE		XX

UNITED NATIONS DEVELOPMENT PROGRAM
LOTFA PROJECT AFGHANISTAN
KABUL MOI

ENGINEERING DIVISION
PERs PROJECT

DESIGNED BY: XX
CHECKED BY: XX
APPROVED BY: XX
DATE: 02.09.2020
SUBMITTED BY: UNDP/LOTFA
CONTRACT NO.: XX
T.O.: 01

UNDP / LOTFA AFGHANISTAN
KABUL, AFGHANISTAN
BUILDING 02 - PHQ
SECTION B-B

SHEET NUMBER
A-106B

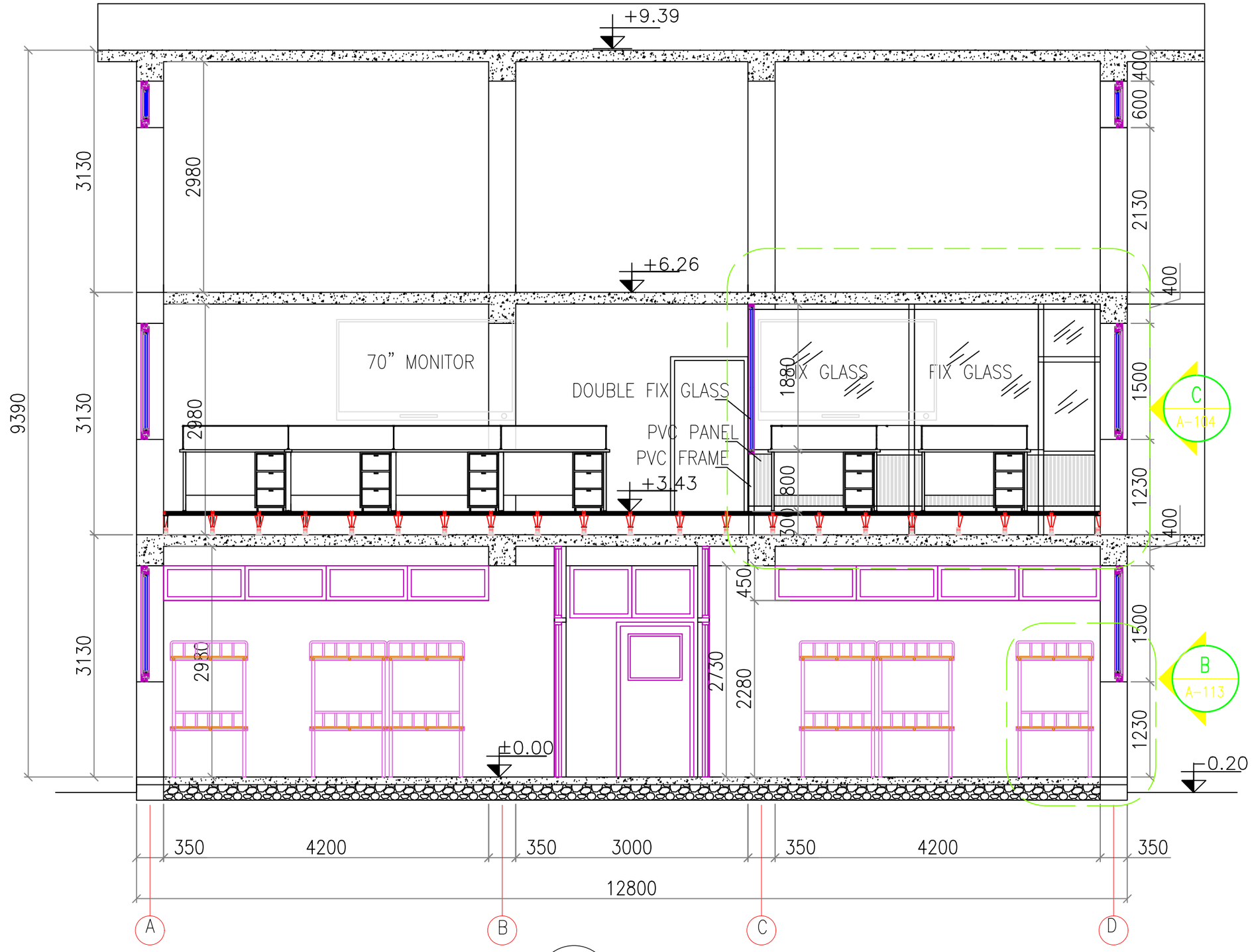

1 A-106 SECTION A-A
SCALE: 1:50

REV No.	DESCRIPTION	Date	APPROVED
3	REVISION	05.03.20	XX
2	100% SUBMITTAL		XX
1	FIRST ISSUE		XX

SCALE 1:50

UNITED NATIONS DEVELOPMENT PROGRAM
LOTFA PROJECT AFGHANISTAN
KABUL MOI

DESIGNED BY: XX
CHECKED BY: XX
APPROVED BY: XX
DATE: 02.09.2020
SUBMITTED BY: UNDP/LOTFA
CONTRACT NO.: XX
T.O.: 01

ENGINEERING DIVISION
PERs PROJECT

UNDP / LOTFA AFGHANISTAN
KABUL, AFGHANISTAN
BUILDING 02 - PHQ
SECTION A-A

SHEET NUMBER
A-106

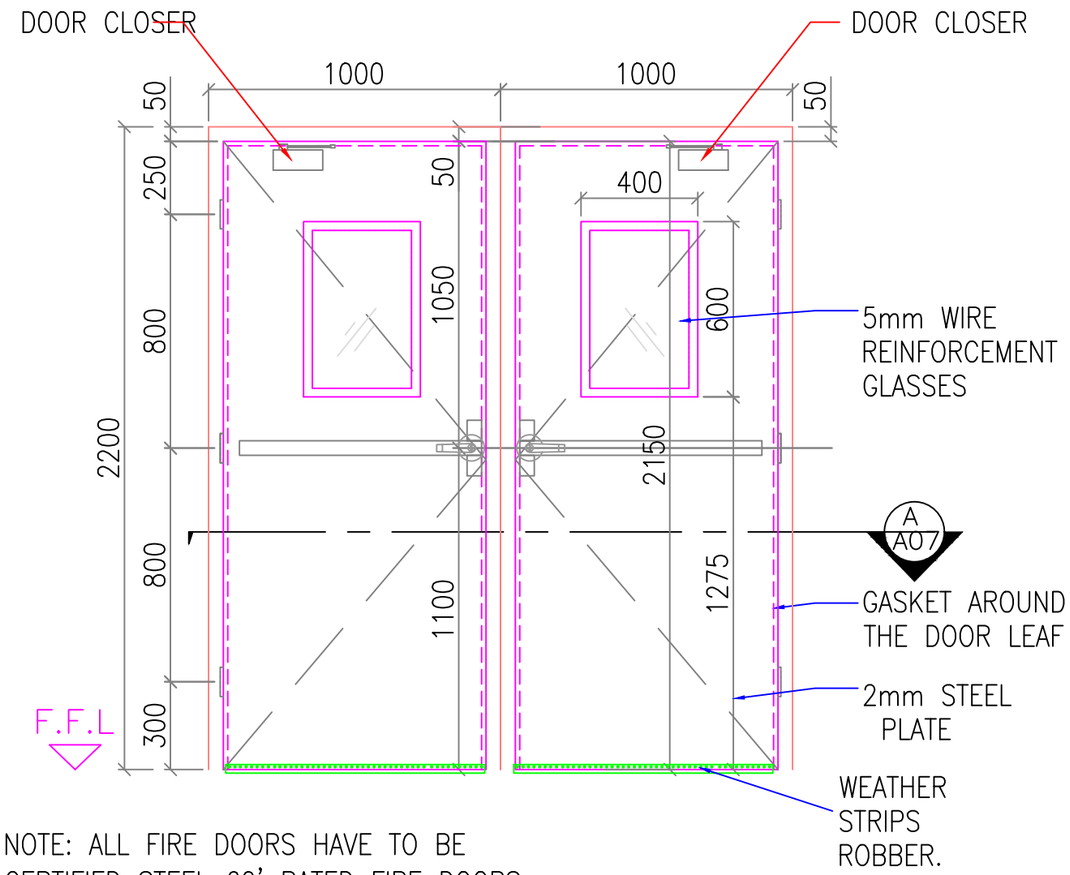

NOTE: ALL FIRE DOORS HAVE TO BE CERTIFIED STEEL 60' RATED FIRE DOORS

F.D. FIRE RATED STEEL DOOR (D1a)
08110 – 08710

1 / A107 STEEL DOOR
SCALE 1:20

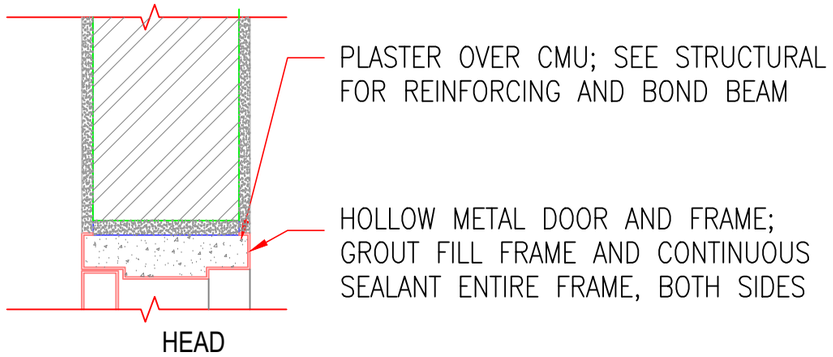

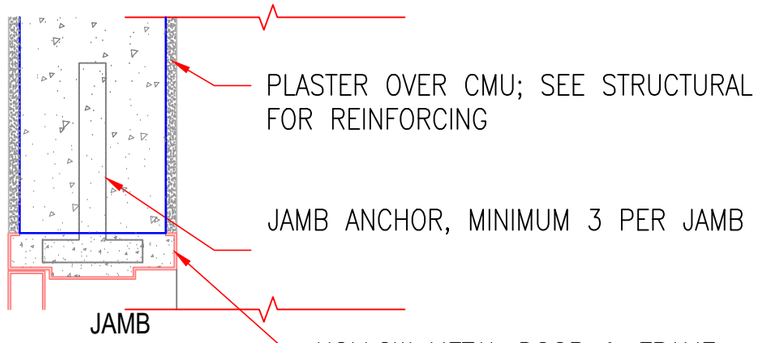

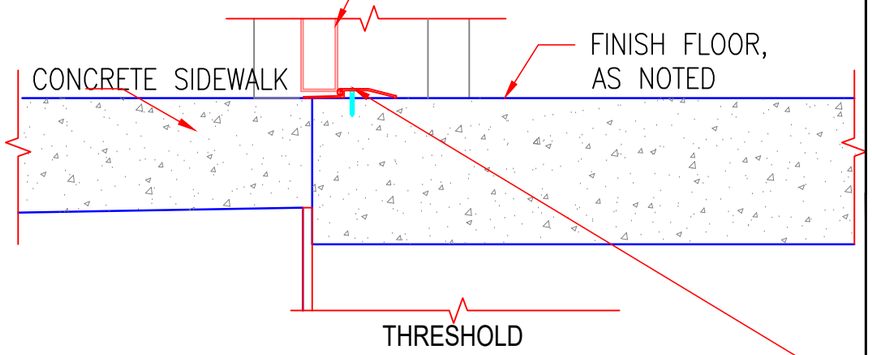

ALL EXTERIOR DOORS METAL THRESHOLD SET IN BED OF MASTIC SHALL USE.
AND FOR ALL WET AREA DOORS SOLID MARBLE 13mm ABOVE FLOOR TILE THRESHOLD IS NEEDED

- ALL EXTERIOR DOORS ARE METAL WITH METAL FRAME WITH COMMERCIAL DUTY MORTISE LOCKS EMERGENCY EXIT DEVICES, WHERE REQUIRED,SHALL BE GRADE 1, FLASH MOUNTED TYPE.
- ALL INTERIOR DOOR SHALL BE HOLLOW METAL WITH HOLLOW METAL FRAME AND SHALL HAVE MORTISE LOCKSET.
- TOILET STALL DOORS SHALL HAVE THUMB LATCH ON INSIDE.
- DOOR STOPS SHALL BE PROVIDED FOR INTERIOR AND EXTERIOR DOORS.
- ALL NEW INTERIOR DOORS SHALL COMPLY WITH CRITERIA IN ACCORDANCE WITH BUT NOT LIMITED TO NFPA 80, SDI 250.4, ASTM A924, C578, C59.
- PROVIDE STEEL ANCHORS, ZINC–COATED OR PAINTED WITH RUST–INHIBITIVE PAINT, ANCHORS NOT LIGHTER THAN 1.2 MM THICK.
- PROVIDE AT LEAST THREE ANCHORS FOR EACH JAMB. FOR FRAMES WHICH ARE MORE THAN 2285 MM IN HEIGHT,
- PROVIDE ONE ADDITIONAL ANCHOR FOR EACH JAMB FOR EACH ADDITIONAL 760 MM OR FRACTION THEREOF.

A. EXTERIOR: COMMERCIAL DUTY EXTERIOR HINGES (UL) SHALL HAVE NON–REMOVABLE PINS AND BE SATIN–CHROME STEEL OR STAINLESS STEEL; GRADE 1 ANTI–FRICTION
B. INTERIOR: COMMERCIAL DUTY INTERIOR HINGES (UL) SHALL BE GRADE 1; ANTIFRICTION OR BALL BEARING
C. HINGES FOR LABELED FIRE DOORS MUST BE EITHER STEEL OR STAINLESS STEEL. HINGES SHALL CONFORM TO ANSI/BHMA A156.1 AND A156.7

Rev No	Description	Date	Approved
3	REVISION	05.03.20	XX
2	100% SUBMITTAL		XX
1	FIRST ISSUE		XX

SCALE 1:20

DATE: 02.09.2020
DESIGNED BY: XX
SUBMITTED BY: UNOPS/LOTFA
CHECKED BY: XX
CONTRACT NO.: XX T.O.: 01
APPROVED BY: XX

UNITED NATIONS DEVELOPMENT PROGRAM
LOTFA PROJECT AFGHANISTAN
KABUL MOI

ENGINEERING DIVISION
PERs PROJECT

UNDP / LOTFA AFGHANISTAN
KABUL, AFGHANISTAN
BUILDING 02 - PHQ
FIRE RATED STEEL DOOR DETAILS

SHEET NUMBER
A–107

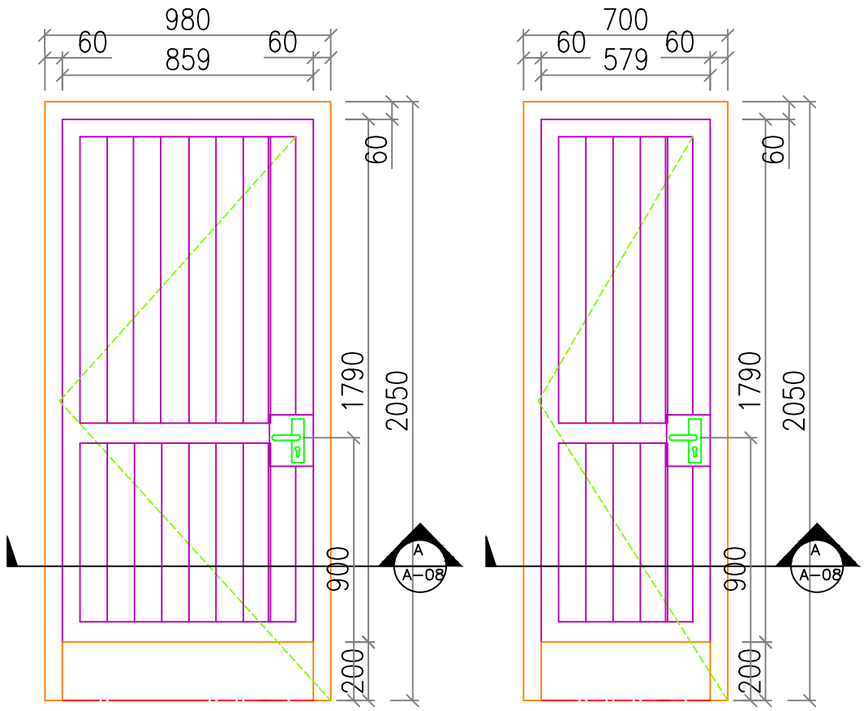

A-80 PVC
DOOR (D3)
08560-08710

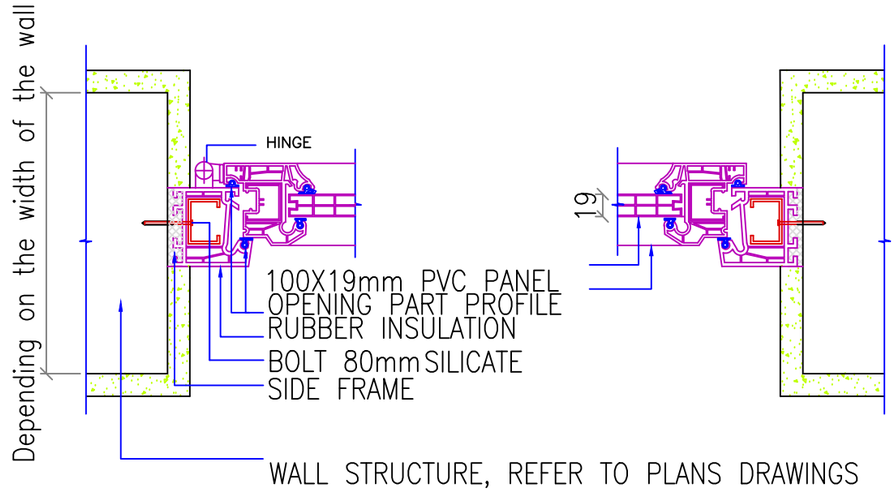

A / A08 JAMB DETAIL, PVC DOOR
SCALE 1:5

1 / A-108 A-80 PVC DOOR
SCALE: 1:20

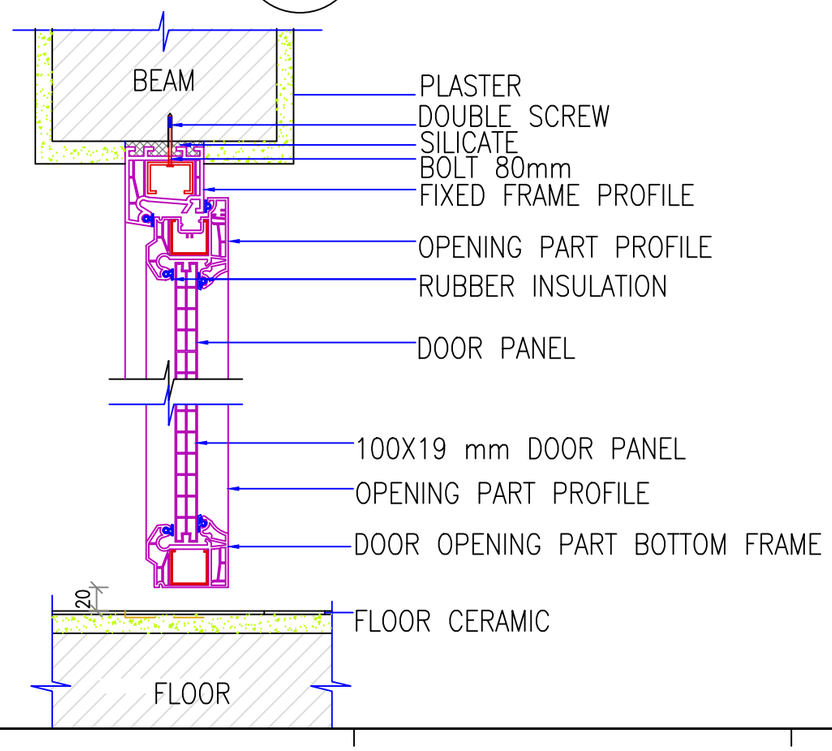

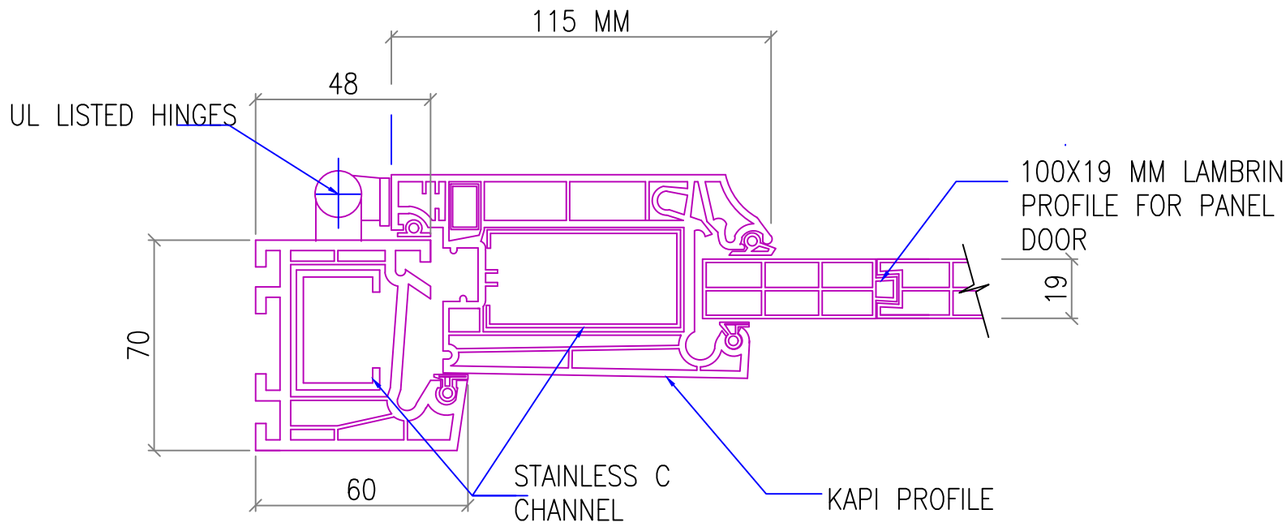

1 / A-08 A-80 PVC DOOR DETAIL
SCALE: NTS

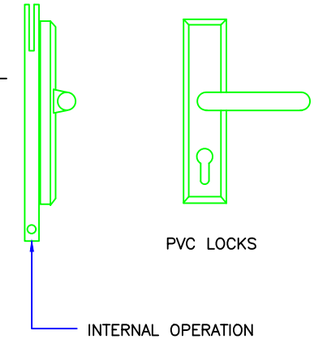

REV No	DESCRIPTION	Date	APPROVED
3	REVISION	05.03.20	XX
2	100% SUBMITTAL	XX	XX
1	FIRST ISSUE	XX	XX

SCALE 1:20

DATE: 02.09.2020
SUBMITTED BY: UNDP/LOTFA
CONTRACT NO.: XX
T.O.: 01
DESIGNED BY: XX
CHECKED BY: XX
APPROVED BY: XX

UNITED NATIONS DEVELOPMENT PROGRAM
LOTFA PROJECT AFGHANISTAN
KABUL MOI

ENGINEERING DIVISION
PERs PROJECT

UNDP / LOTFA AFGHANISTAN
KABUL, AFGHANISTAN
BUILDING 02 - PHQ
PVC DOOR DETAILS

SHEET NUMBER
A-108

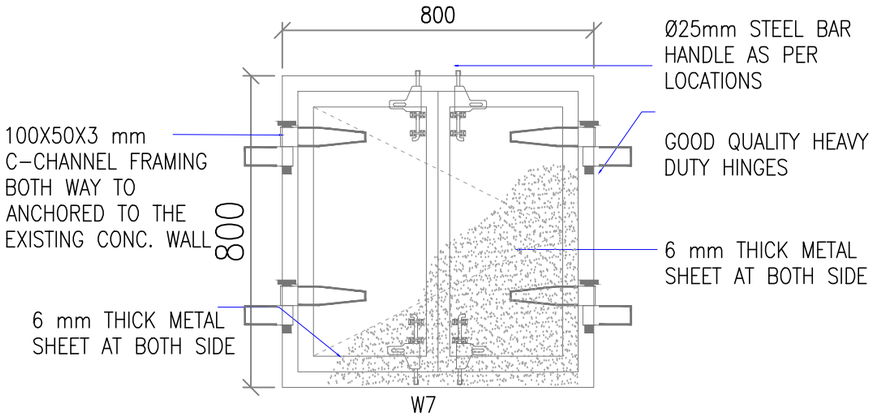

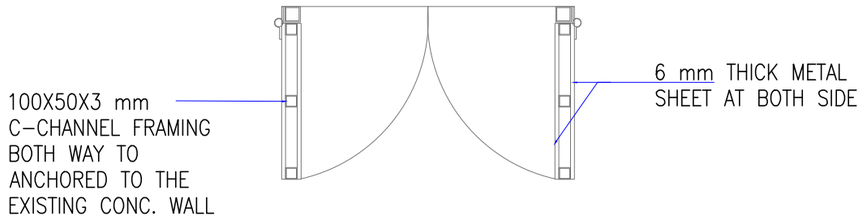

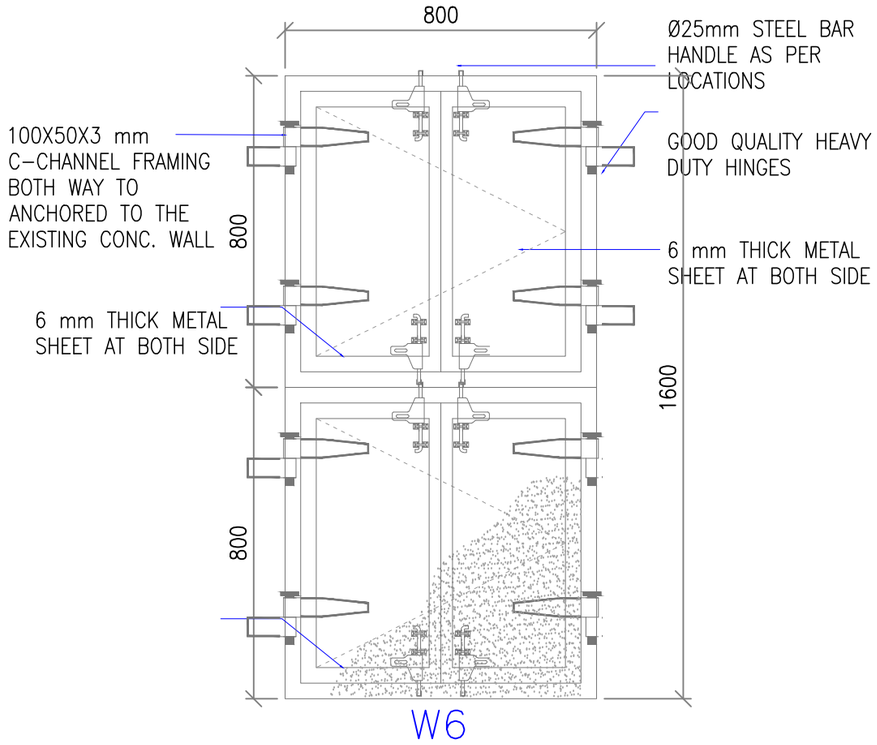

1 / A-109A BLAST PROOF WINDOWS

SCALE: 1:15

REV No.	DESCRIPTION	Date	APPROVED
3	REVISION	05.03.20	XX
2	100% SUBMITTAL		XX
1	FIRST ISSUE		XX

SCALE 1:15

DATE: 02.09.2020
SUBMITTED BY: UNDP/LOTFA
CONTRACT NO.: XX T.O.: 01
DESIGNED BY: XX
CHECKED BY: XX
APPROVED BY: XX

UNITED NATIONS DEVELOPMENT PROGRAM
LOTFA PROJECT AFGHANISTAN
KABUL MOI

ENGINEERING DIVISION
PERs PROJECT

UNDP / LOTFA AFGHANISTAN
KABUL, AFGHANISTAN
BUILDING 02 - PHQ
BLAST PROOF WINDOWS DETAILS

SHEET NUMBER
A-109

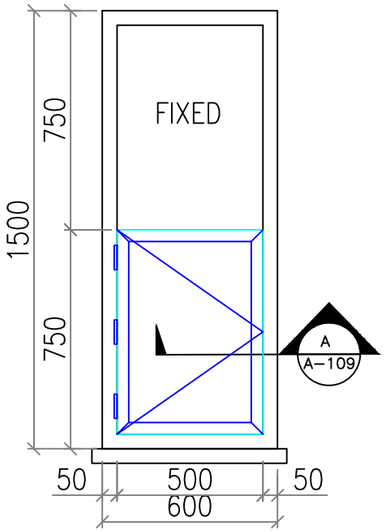

SIDE HANG WINDOW(W4)
08560

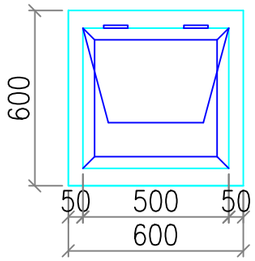

TOP HANG
WINDOW(W3)
08560

1 / A-109 PVC WINDOWS 7000
SCALE: 1:20

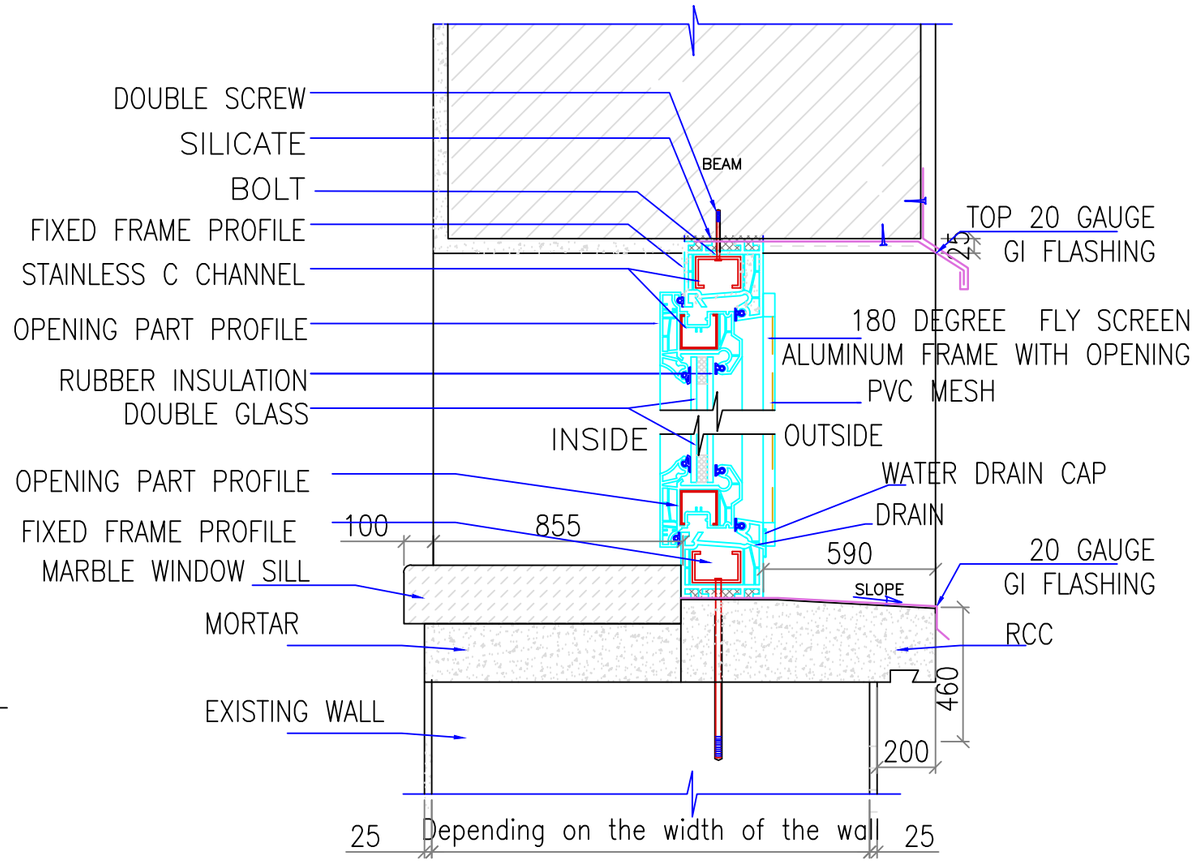

A / A-109 SECTION
SCALE 1:5

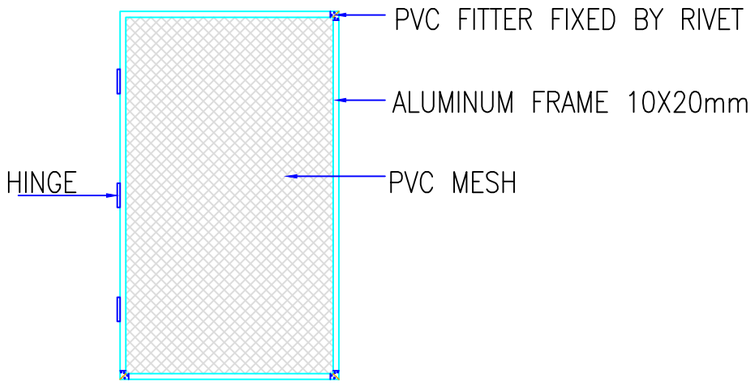

180 DEGREE FLY SCREEN
ALUMINUM FRAME WITH OPENING

2 / A-109 PVC FLY SCREEN
SCALE: NTC

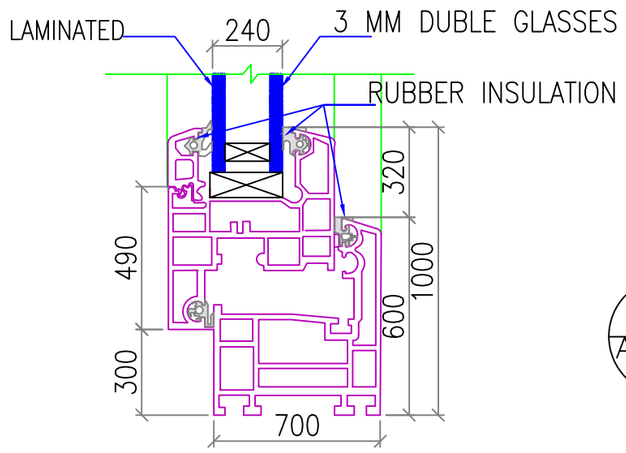

3 / A-109 PVC WINDOW SECTION
SCALE: 1:5

REV No.	DESCRIPTION	Date	APPROVED
3	REVISION	XX	
2	100% SUBMITTAL	05.03.20	XX
1	FIRST ISSUE	XX	XX

SCALE 1:20

DATE: 02.09.2020
SUBMITTED BY: UNDP/LOTFA
CONTRACT NO.: XX
T.O.: 01
DESIGNED BY: XX
CHECKED BY: XX
APPROVED BY: XX

UNITED NATIONS DEVELOPMENT PROGRAM
LOTFA PROJECT AFGHANISTAN
KABUL MOI

ENGINEERING DIVISION
PERs PROJECT

UNDP / LOTFA AFGHANISTAN
KABUL, AFGHANISTAN
BUILDING 02 - PHQ
PVC WINDOWS DETAILS

SHEET NUMBER
A-109

DOOR SCHEDULE AND SPECIFICATIONS

No.	STRUCTURE OPENING WIDTH	STRUCTURE OPENING HEIGHT	OPENING SYSTEM	FRAME HARDWARE	MATERIAL	FIRE RATING MIN.	QUANTITY
D1A	2000	2200	HINGED	METAL (GROUT FILL)	- HOLLOW METAL DOOR AND HOLLOW METAL FRAME(FIRE-RATED 40MM POLYSTYRENE) - 5MM REINFORCEMENT WIRE GLASS VISION WINDOW - COMMERCIAL DUTY MORTISE LOCK SETS AND PUSH PAR PANIC HARDWARE FROM INSIDE - DOOR CLOSER -DOOR SHALL COMPLY NFPA 80, SDI 250.4, ASTM A924, - C578, C59. FRAME SHALL COMPLY SDI A250.8, GASKET AROUND DOOR LEAF	20 & 45 Min For D1A	2
D2	1000	2200	HINGED	HOLLOW METAL (GROUT FILL)	- HOLLOW METAL DOOR AND HOLLOW METAL FRAME(FIRE-RATED 40MM POLYSTYRENE) - BORED LOCK SETS WITH KEY FROM BOTH OUTSIDE - DOOR CLOSER	20	13
D3	1000	2200	HINGED	PVC A-80	-PVC DOOR AND FRAME - LATCH LOCK SETS WITH KEY HARDWARE FROM INSIDE		4
D4	1100	2200	HINGED	HOLLOW METAL (GROUT FILL)	- HOLLOW METAL DOOR AND HOLLOW METAL FRAME(FIRE-RATED 40MM POLYSTYRENE) - LOCK SETS WITH KEY HARDWARE FROM OUT SIDE - DOOR CLOSER	20	6
D5	700	1900	HINGED	PVC A-80	-PVC DOOR AND FRAME - LATCH LOCK SETS WITH KEY HARDWARE FROM INSIDE		15

WINDWS SCHEDULE AND SPECIFICATIONS

No.	STRUCTURE OPENING WIDTH	STRUCTURE OPENING HEIGHT	OPENING SYSTEM	FRAME HARDWARE	MATERIAL	QUANTITY
W3	600	600	HINGED	PVC A-70	-PVC DOOR AND FRAME - HANDLE LOCK SETS HARDWARE FROM INSIDE	12
W4	600	1500	HINGED	PVC A-70	-PVC DOOR AND FRAME - HANDLE LOCK SETS HARDWARE FROM INSIDE	25
W5	2000	1500	HINGED	PVC A-70	-PVC DOOR AND FRAME - HANDLE LOCK SETS HARDWARE FROM INSIDE	1
W6	800	1600	HINGED	HOLLOW METAL (GROUT FILL)	- HOLLOW METAL BLAST PROOF WINDOW AND HOLLOW METAL FRAME(GROUT FILL) - LOCK SETS WITH KEY HARDWARE FROM IN SIDE	25
W7	800	800	HINGED	HOLLOW METAL (GROUT FILL)	- HOLLOW METAL BLAST PROOF WINDOW AND HOLLOW METAL FRAME(GROUT FILL) - LOCK SETS WITH KEY HARDWARE FROM IN SIDE	12

REV No.	DESCRIPTION	Date	APPROVED
3	REVISION	05.03.20	XX
2	100% SUBMITTAL	XX	XX
1	FIRST ISSUE		

SCALE 1:25

DATE: 02.09.2020
SUBMITTED BY: UNDP/LOTFA
CONTRACT NO.: XX T.O. 01

DESIGNED BY: XX
CHECKED BY: XX
APPROVED BY: XX

UNITED NATIONS DEVELOPMENT PROGRAM
LOTFA PROJECT AFGHANISTAN
KABUL MOI

ENGINEERING DIVISION
PERs PROJECT

UNDP / LOTFA AFGHANISTAN
KABUL, AFGHANISTAN
BUILDING 02 - PHQ
DOORS & WINDOWS SCHEDULE

SHEET NUMBER
A-110a

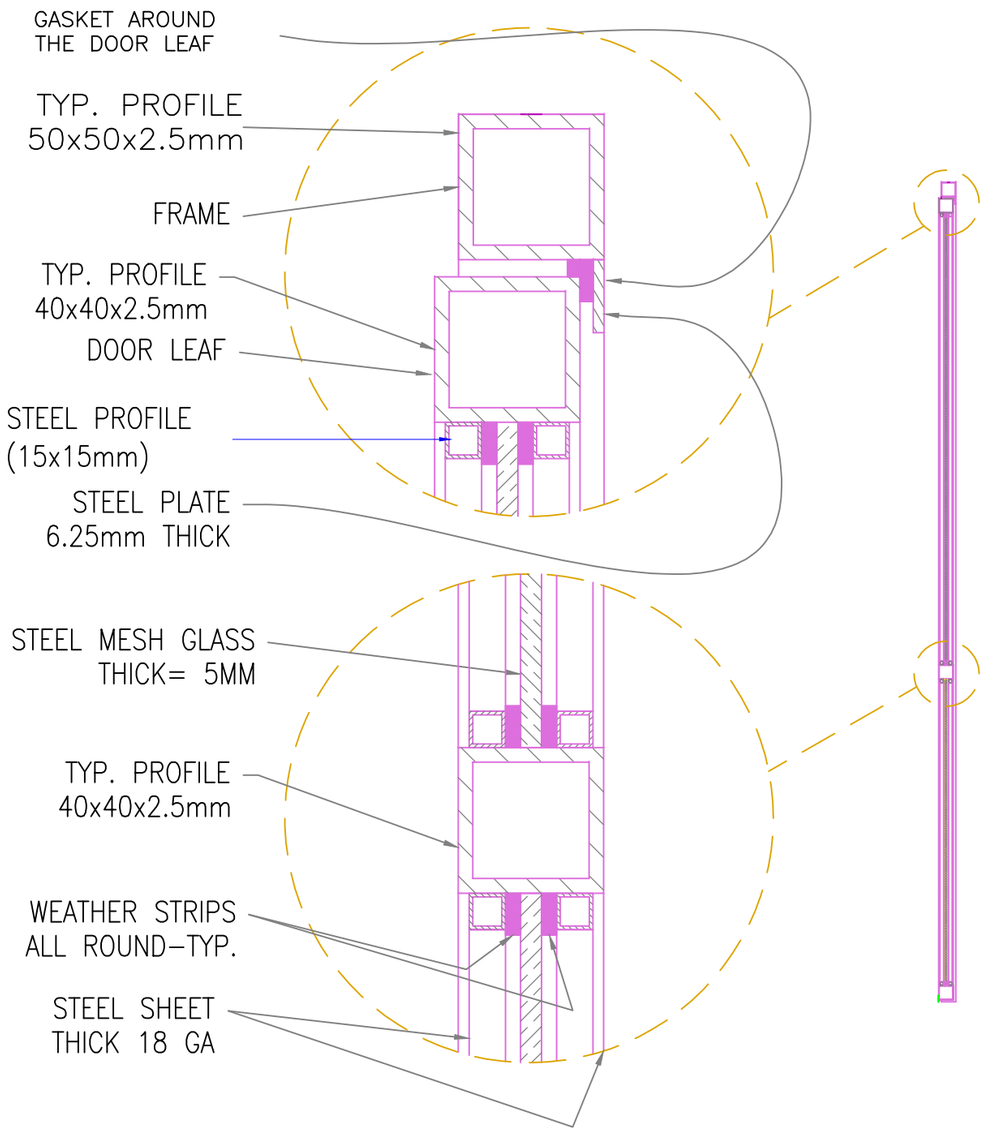

1 / A-10 SECTION
SCALE: 1:5

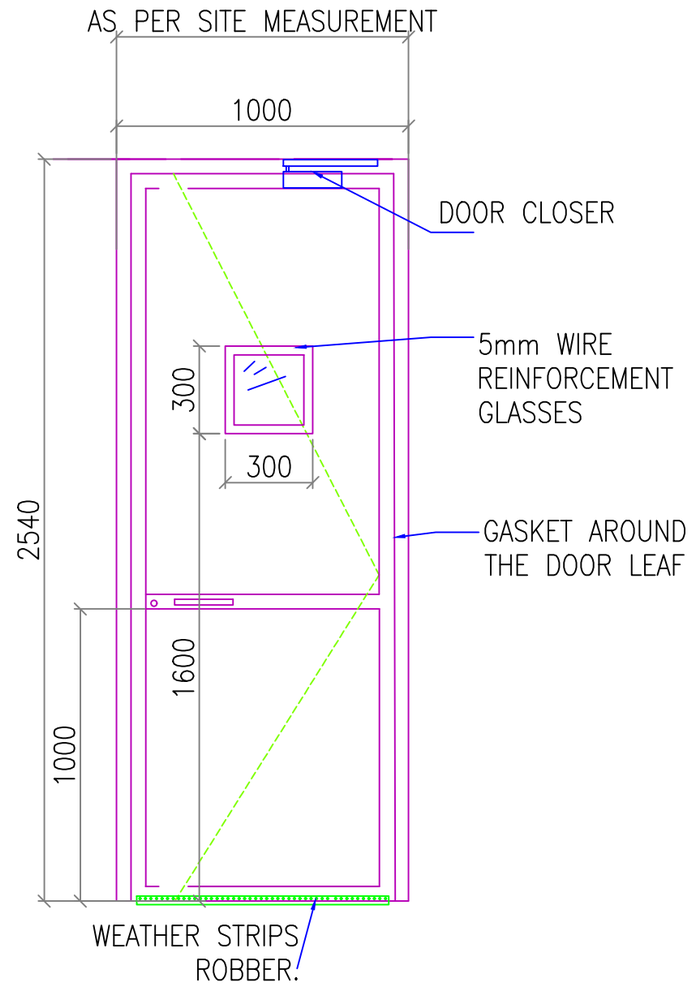

STEEL DOOR (D2)
08110-08710

1 / A-10 STEEL DOOR
SCALE: 1:20

NOTE: FOR THE DOUBLE AND SINGLE STEEL DOOR MANUFACTURE USE THE SAME DETAIL FOR THE DIMENSION SEE ARCHITECTURAL PLAN

REV No.	DESCRIPTION	Date	APPROVED
3	REVISION	XX	
2	100% SUBMITTAL	05.03.20	XX
1	FIRST ISSUE		XX

SCALE 1:20

DESIGNED BY: XX
DATE: 02.09.2020
CHECKED BY: XX
SUBMITTED BY: UNDP/LOTFA
APPROVED BY: XX
CONTRACT NO.: XX
T.O.: 01

UNITED NATIONS DEVELOPMENT PROGRAM
LOTFA PROJECT AFGHANISTAN
KABUL MOI

ENGINEERING DIVISION
PERs PROJECT

UNDP / LOTFA AFGHANISTAN
KABUL, AFGHANISTAN
BUILDING 02 - PHQ
STEEL DOOR DETAILS

SHEET NUMBER
A-110

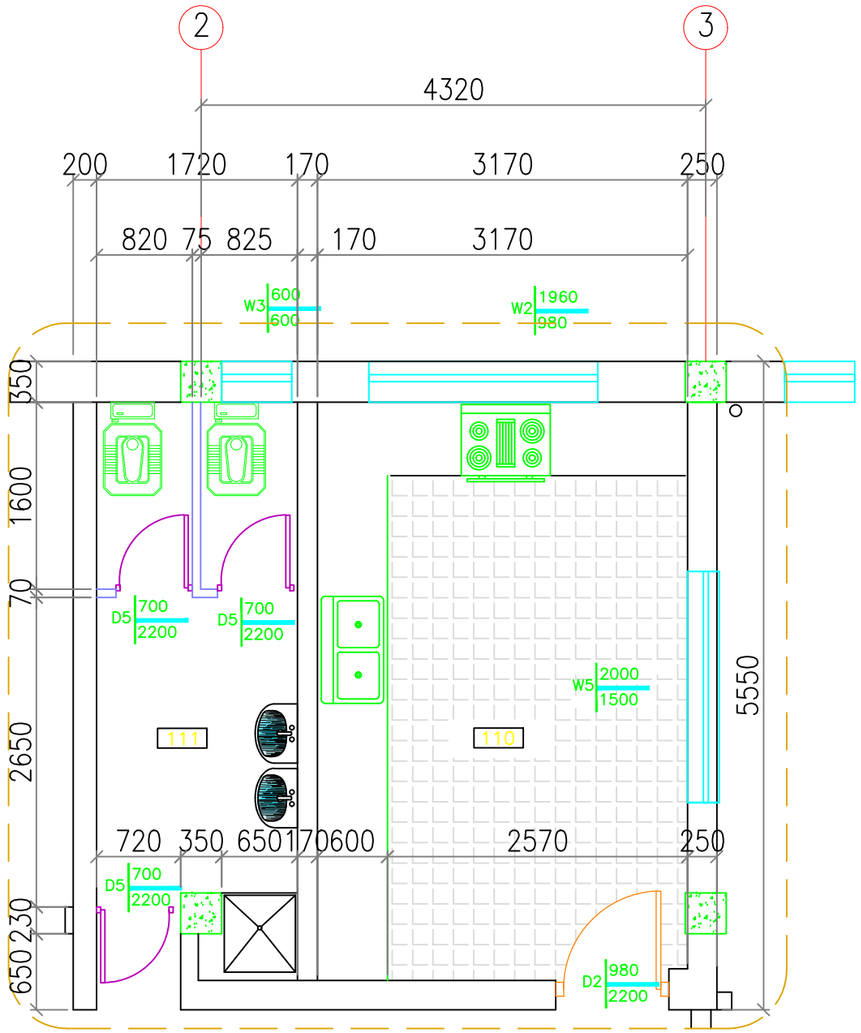

1 / A-111 GROUND FLOOR ENLARGE PLAN
SCALE: 1:50

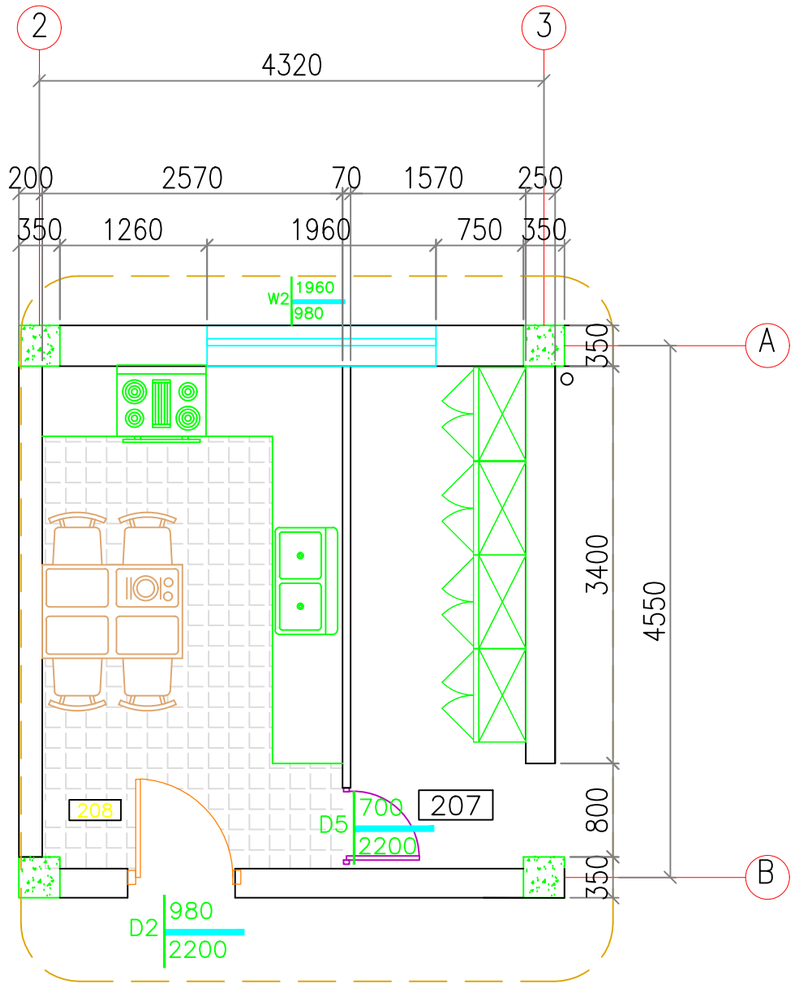

1 / A-111 FIRST FLOOR ENLARGE PLAN
SCALE: 1:50

REV No	DESCRIPTION	Date	APPROVED
3	REVISION	05.03.20	XX
2	100% SUBMITTAL		XX
1	FIRST ISSUE		XX

SCALE 1:50

DESIGNED BY: XX
DATE: 02.09.2020
CHECKED BY: XX
SUBMITTED BY: UNOPS/LOTFA
APPROVED BY: XX
CONTRACT NO.: XX T.O.: 01

UNITED NATIONS DEVELOPMENT PROGRAM
LOTFA PROJECT AFGHANISTAN
KABUL MOI

ENGINEERING DIVISION
PERs PROJECT

UNDP / LOTFA AFGHANISTAN
KABUL, AFGHANISTAN
BUILDING 02 - PHQ
KITCHEN ENLARGE PLAN

SHEET NUMBER
A-111

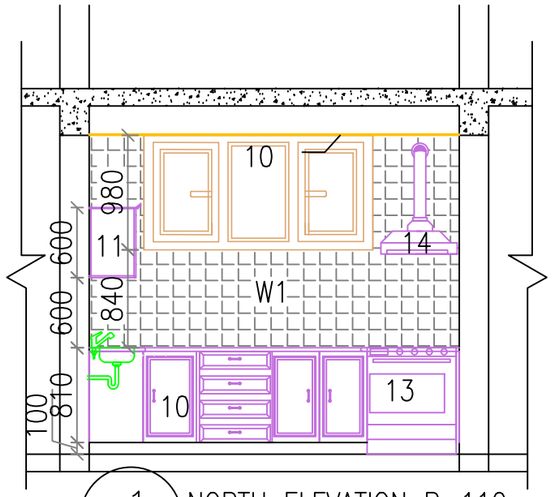

1 / A-112 NORTH ELEVATION R-110
SCALE:1:50

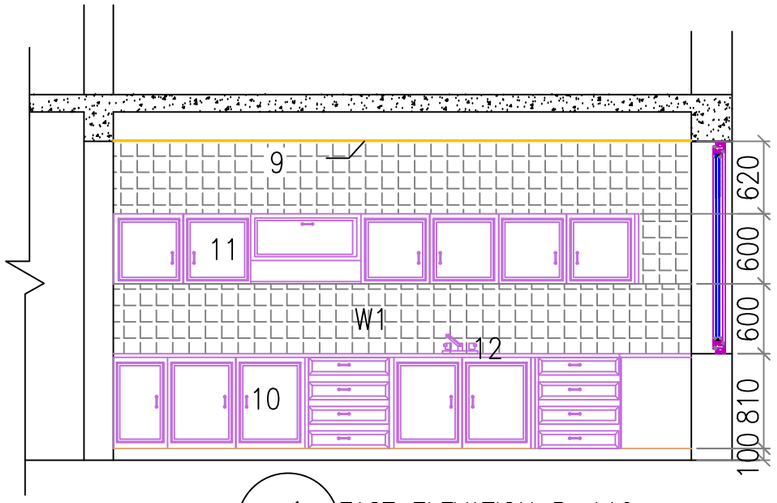

1 / A-112 EAST ELEVATION R-110
SCALE:1:50

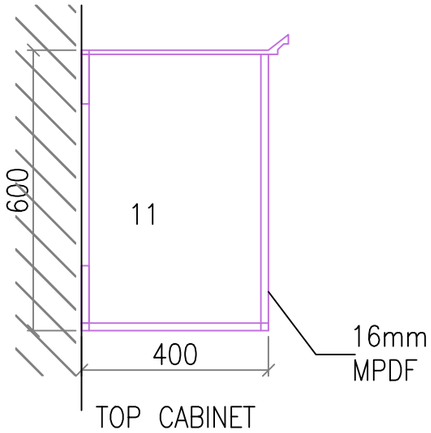

TOP CABINET

FLOOR

F1	300MM X 300 MM TERRAZZO TILE

WALL

W1	GLASSING CERAMIC TILE H=2000MM

CEILING

C1	NEW ALUMINUM FALLS CEILING

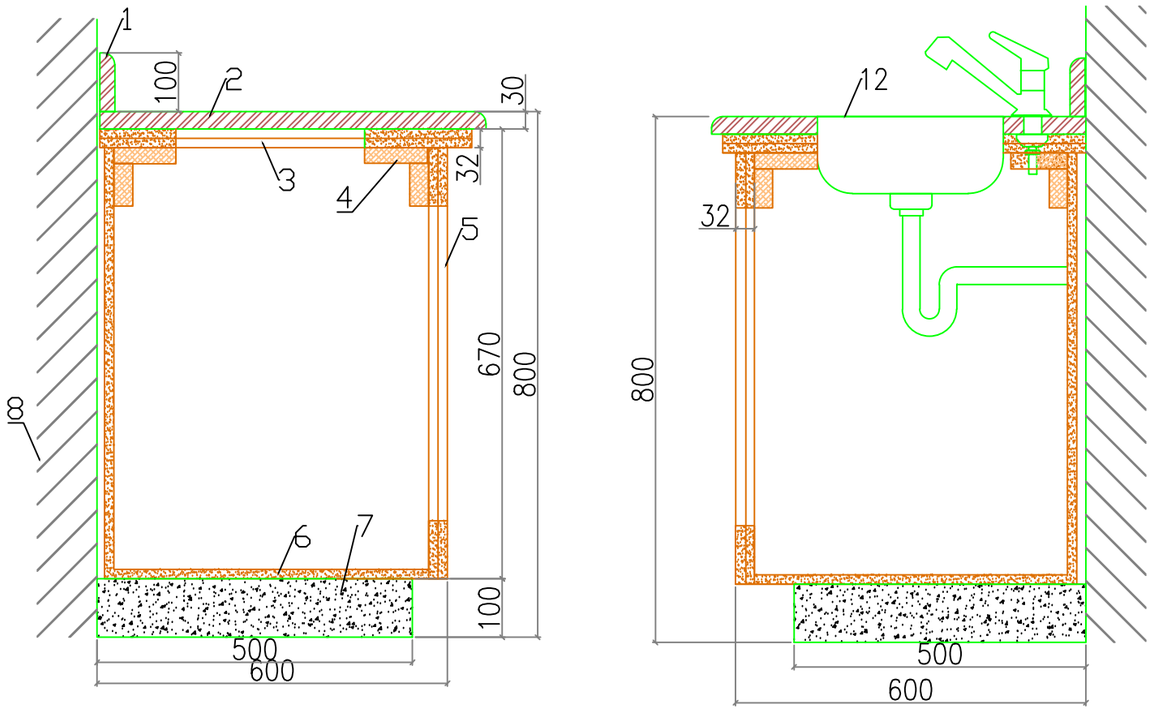

2 / A-112 KITCHEN CABINET SECTION DETAILS
SCALE: 1:25

KITCHEN CABINET LEGEND

1- GRANITE SKIRTING THICK= 12MM
2- GRANITE TABLE THICK= 30MM
3- DOUBLE LAYER MPDF (WATER PROOF) THICK=16MM
4- RUSSIAN KHAR WOODEN FRAME & SUPPORT
5- CABINET LEAF MPDF (WATER PROOF) TICK=16MM
6- ONE LAYER MPDF BASE MPDF (WATER PROOF) TICK=16MM
7- CONCRETE PAD
8- WALL
9- FALLS CEILING
10-BASE CABINET
11- TOP CABINET
12- DISH WASHER
13- OVEN
14- ELECTRICAL HOOD

REV No.	DESCRIPTION	Date	APPROVED
3	REVISION		XX
2	100% SUBMITTAL	05.03.20	XX
1	FIRST ISSUE		XX

SCALE 1:50

DATE: 02.09.2020
SUBMITTED BY: UNDP/LOTFA
CONTRACT NO.: XX
T.O.: 01
DESIGNED BY: XX
CHECKED BY: XX
APPROVED BY: XX

UNITED NATIONS DEVELOPMENT PROGRAM
LOTFA PROJECT AFGHANISTAN
KABUL MOI

ENGINEERING DIVISION
PERs PROJECT

UNDP / LOTFA AFGHANISTAN
KABUL, AFGHANISTAN
BUILDING 02 - PHQ
KITCHEN DETAILS

SHEET NUMBER
A-112

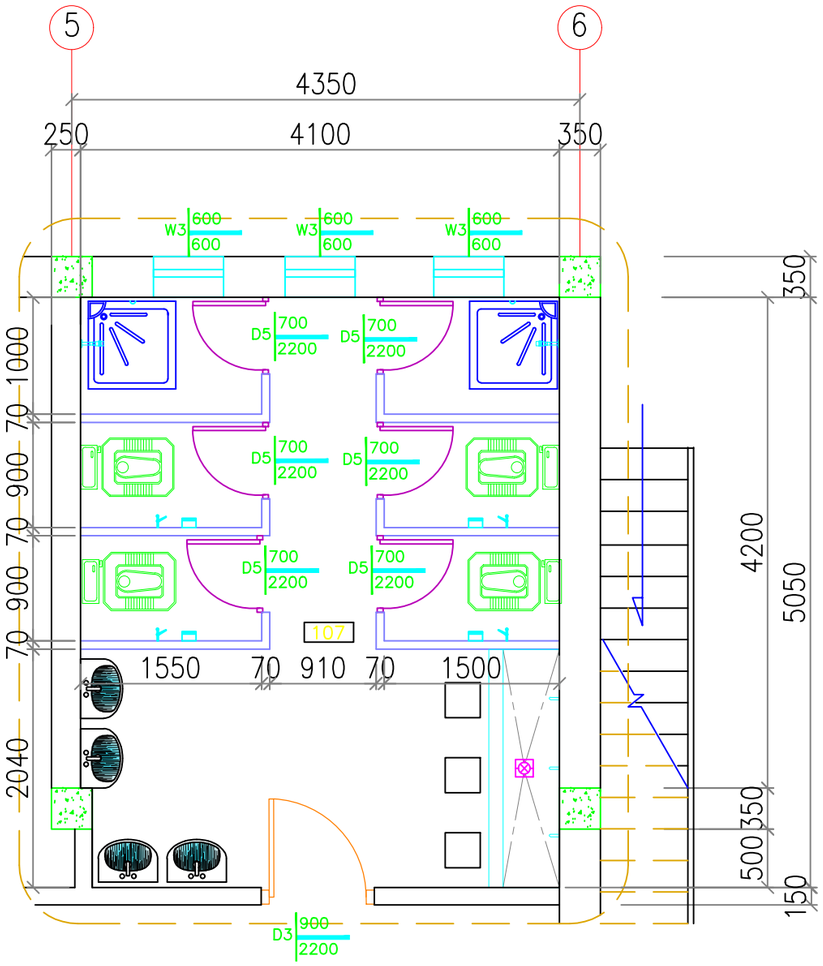

1 / A-113 GROUND FLOOR ENLARGE PLAN
SCALE: 1:50

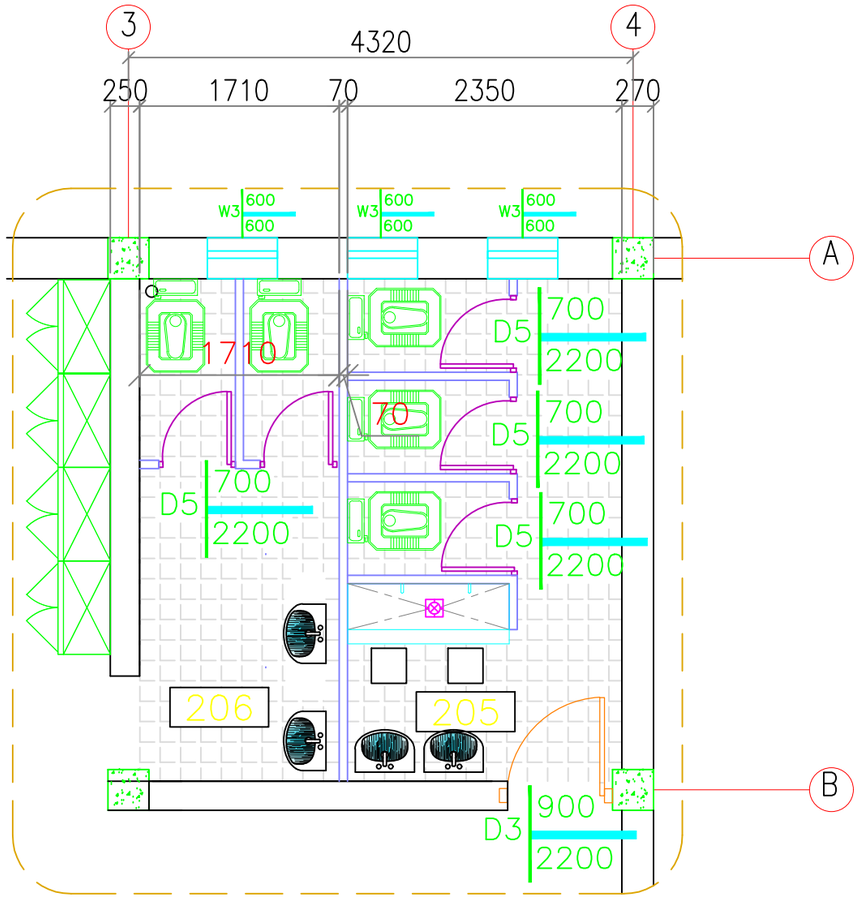

1 / A-113 FIRST FLOOR ENLARGE PLAN
SCALE: 1:50

REV No.	DESCRIPTION	Date	APPROVED
3	REVISION		XX
2	100% SUBMITTAL	05.03.20	XX
1	FIRST ISSUE		XX

SCALE 1:50

DATE: 02.09.2020
SUBMITTED BY: UNDP/LOTFA
CONTRACT NO.: XX T.O.: 01
DESIGNED BY: XX
CHECKED BY: XX
APPROVED BY: XX

UNITED NATIONS DEVELOPMENT PROGRAM
LOTFA PROJECT AFGHANISTAN
KABUL MOI

ENGINEERING DIVISION
PERs PROJECT

UNDP / LOTFA AFGHANISTAN
KABUL, AFGHANISTAN
BUILDING 02 - PHQ
TOILETS ENLARGE PLAN

SHEET NUMBER
A-113

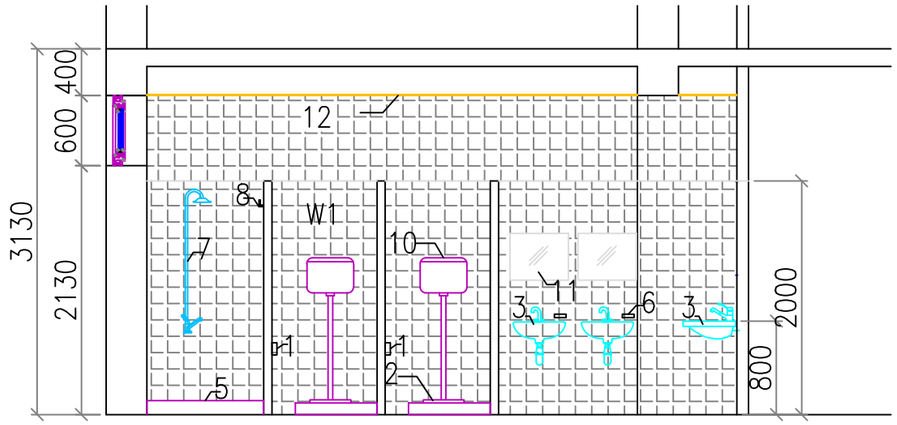

1 / A–114 ROOM#107 MALE TOILET
SCALE: 1:50

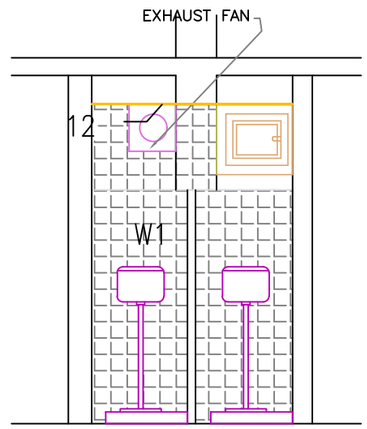

1 / A–114 ROOM#111 Female TOILET
SCALE: 1:50

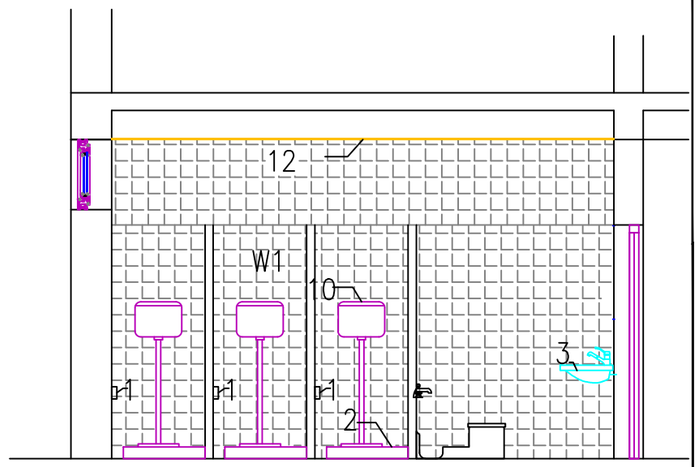

1 / A–114 ROOM#205 Male TOILET
SCALE: 1:50

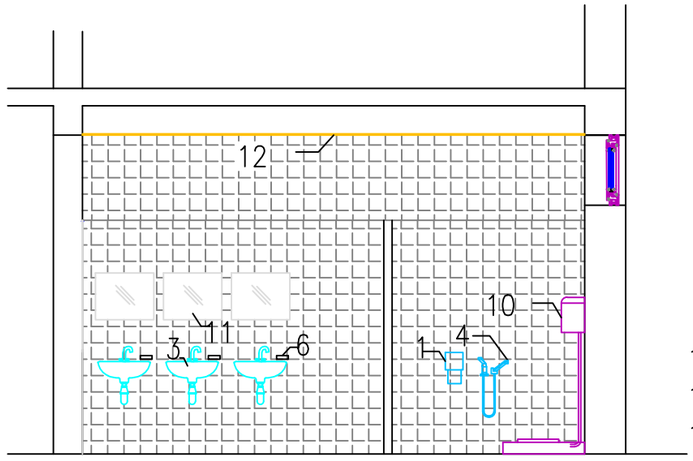

1 / A–114 ROOM#206 Female TOILET
SCALE: 1:50

LEGEND

1– PAPER HOLDER
2 – ASIAN TYPE PAN WC – 10800
3 – PREFABRICATED SINK – 10800
4– MOSLEM SHOWER
5– SHOWER BOX – 10800
6 – SOAP HOLDER – 10800
7 – SHOWER HANGER – 10800
8 – CLOTHES HANGER – 10800
9 – CERAMIC TILES – 09310
10 – TOILET FLUSHING TANK.
11 – MIRROR – 10800
12 – SUSPENDED CEILING – 09545

FLOOR

F2	CERAMIC TILE

WALL

W1	GLASSING CERAMIC TILE H=2000MM

CEILING

C1	NEW ALUMINUM FALLS CEILING

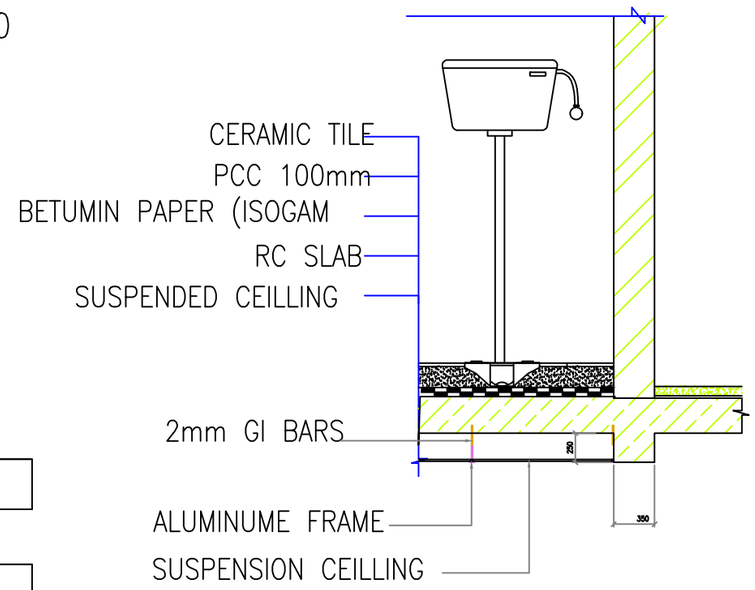

DETAIL FOR FIRST FLOOR

REV No	DESCRIPTION	Date	APPROVED
3	REVISION	05.03.20	XX
2	100% SUBMITTAL		XX
1	FIRST ISSUE		XX

SCALE 1:50

DATE: 02.09.2020
SUBMITTED BY: UNDP/LOTFA
CONTRACT NO.: XX
T.O.: 01

DESIGNED BY: XX
CHECKED BY: XX
APPROVED BY: XX

UNITED NATIONS DEVELOPMENT PROGRAM
LOTFA PROJECT AFGHANISTAN
KABUL MOI

ENGINEERING DIVISION
PERs PROJECT

UNDP / LOTFA AFGHANISTAN
KABUL, AFGHANISTAN
BUILDING 02 - PHQ
TOILETS DETAILS

SHEET NUMBER
A–114

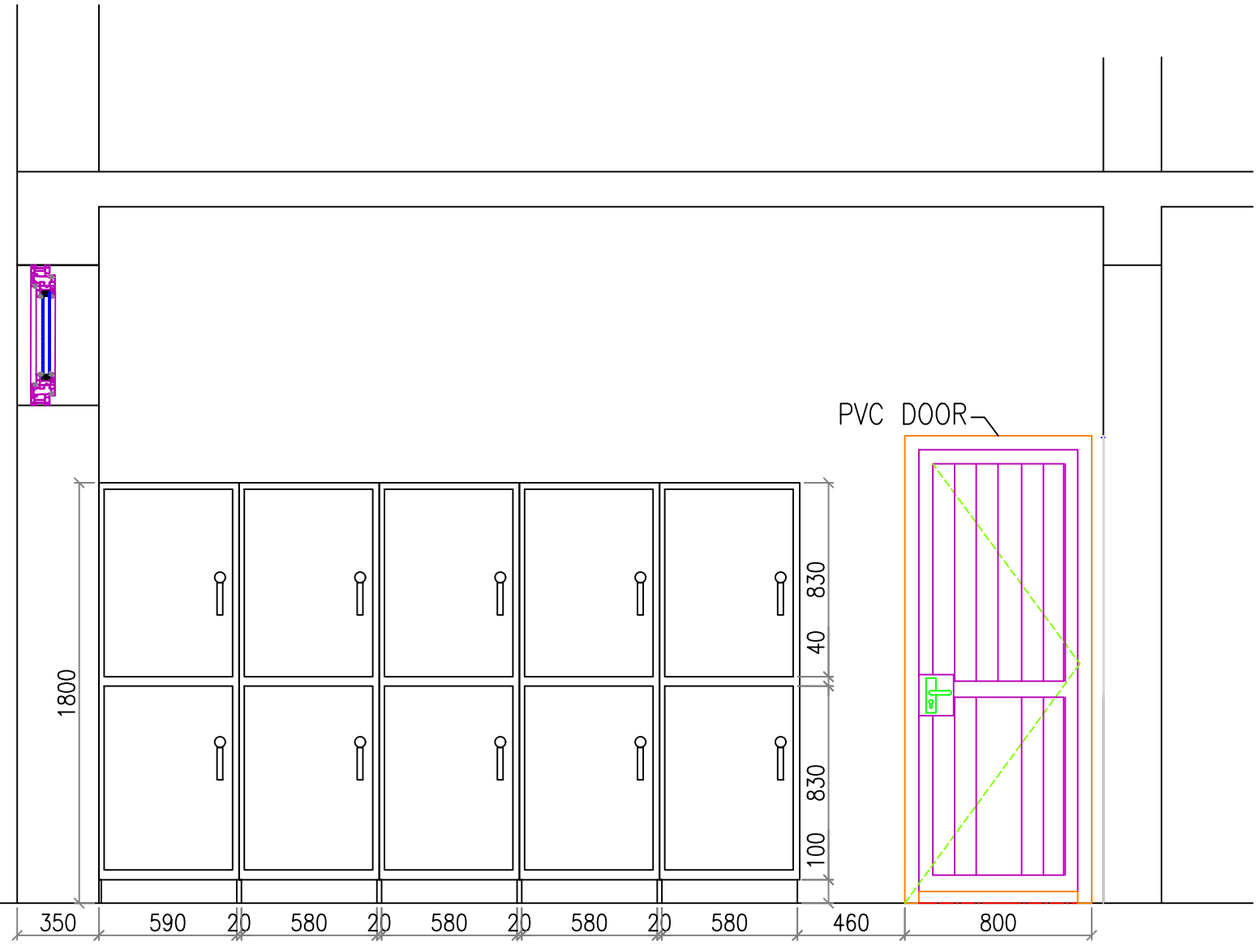

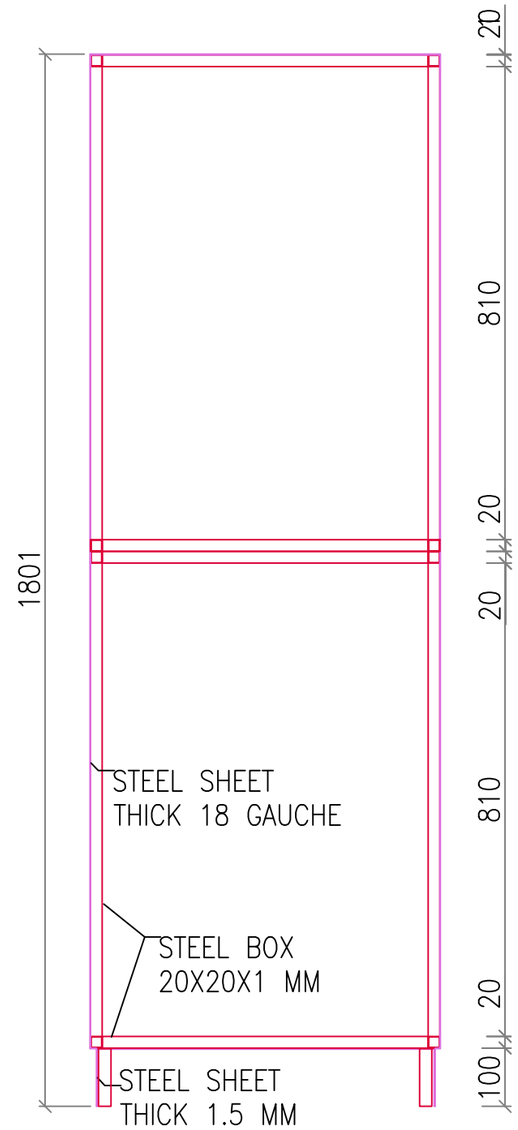

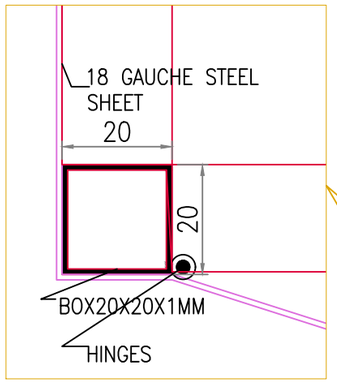

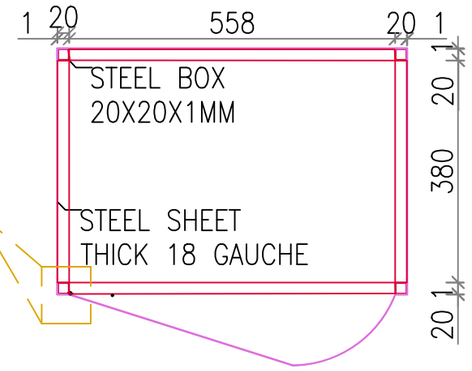

1 / A–115 ROOM#207 Female Steel lockers
SCALE: 1:20

NOTE:
- Powder coated paint
- Fabricate Spot welding
- Hollow metal frame
- Face 18 gauge steel sheet
- Stainless handle lock sets hardware from outside

REV No.	DESCRIPTION	Date	APPROVED
3	REVISION	05.03.20	XX
2	100% SUBMITTAL		XX
1	FIRST ISSUE		XX

SCALE 1:50

UNITED NATIONS DEVELOPMENT PROGRAM
LOTFA PROJECT AFGHANISTAN
KABUL MOI

DESIGNED BY: XX
CHECKED BY: XX
APPROVED BY: XX
DATE: 02.09.2020
SUBMITTED BY: UNDP/LOTFA
CONTRACT NO.: XX
T.O.: 01

ENGINEERING DIVISION
PERs PROJECT

UNDP / LOTFA AFGHANISTAN
KABUL, AFGHANISTAN
BUILDING 02 - PHQ
FEMALE STEEL LOCKERS DETAILS

SHEET NUMBER
A–115

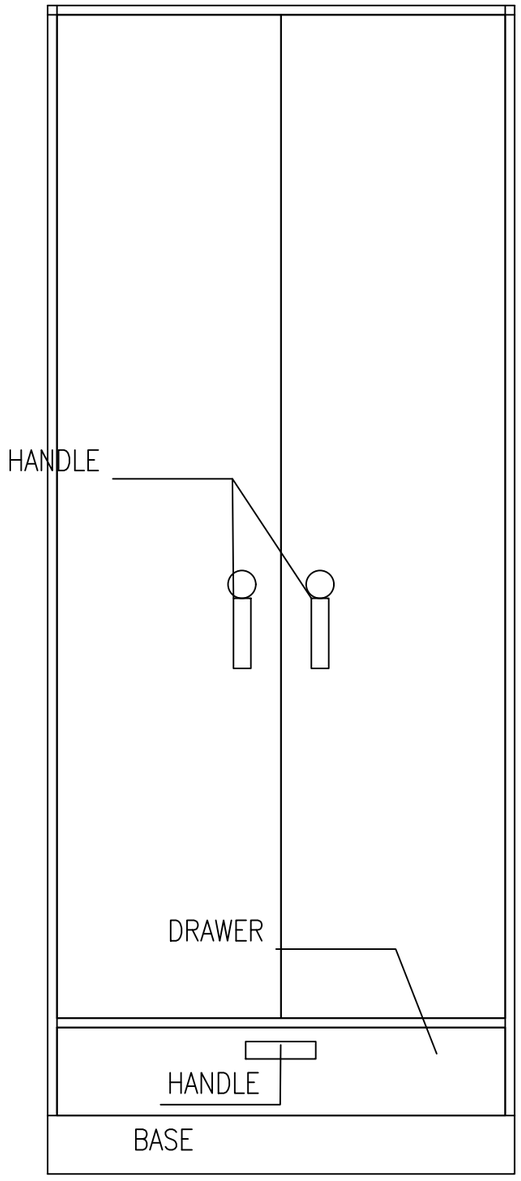

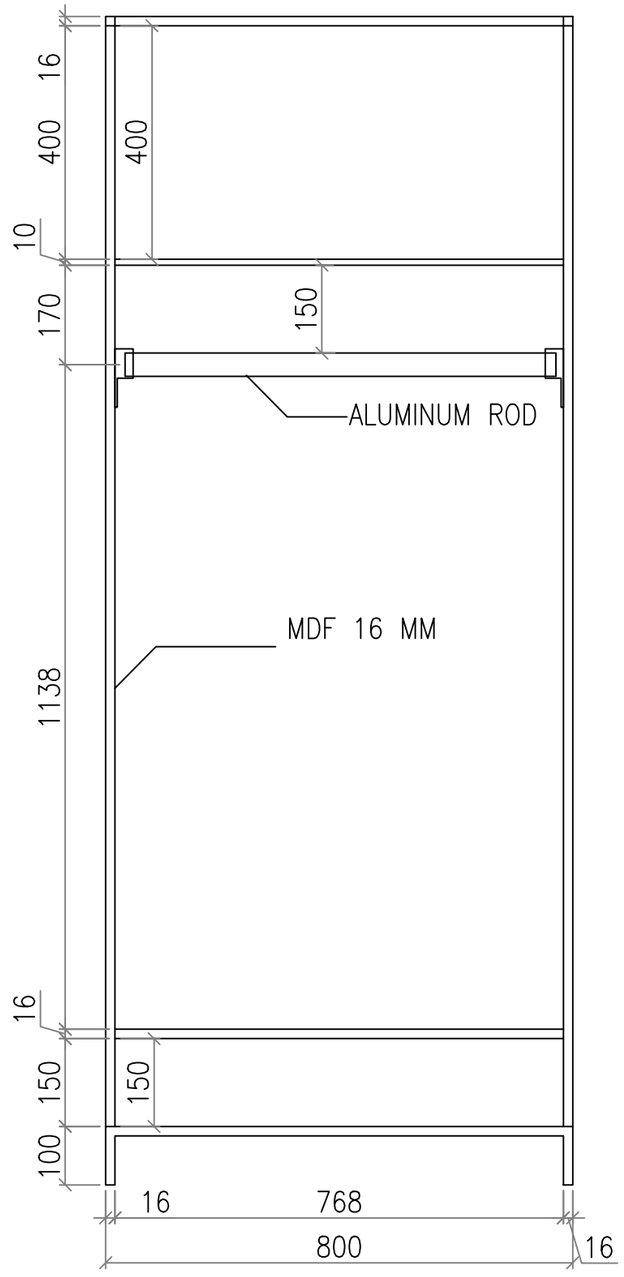

FRONT SECTION

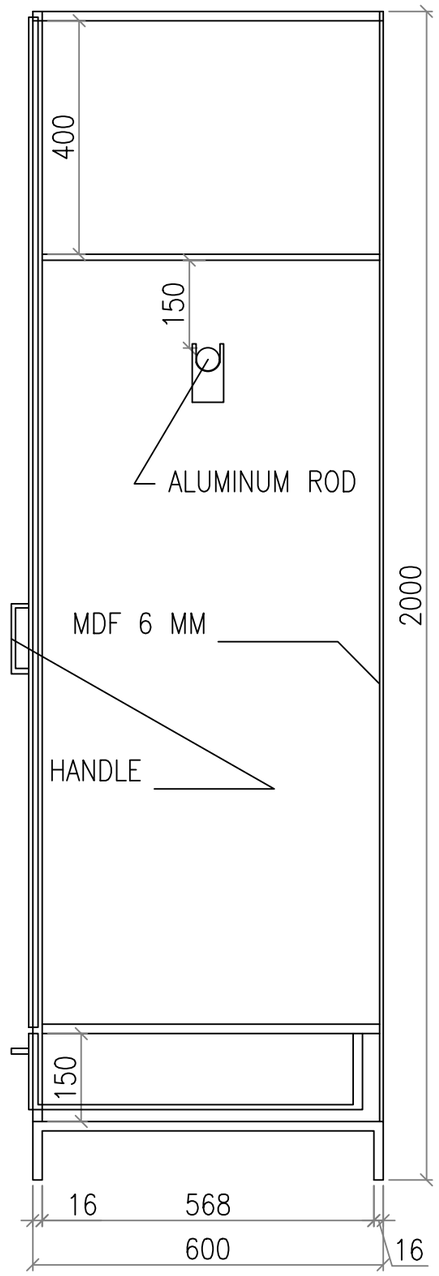

SIDE SECTION

1
A–116
MDF LOCKER FRONT VIEW
SCALE: 1:10

Note:
–Lockers body compact laminated with accessories
–Profiles with features on water resistant, damp proof, heat resistance, fire–proof, ventilated, no rust, and not toxic.
–Stainless handle lock sets hardware from outside

REV No.	DESCRIPTION	Date	APPROVED
3	REVISION		
2	100% SUBMITTAL	05.03.20	XX
1	FIRST ISSUE		XX

SCALE 1:100

DESIGNED BY: XX
CHECKED BY: XX
APPROVED BY: XX
DATE: 02.09.2020
SUBMITTED BY: UNDP/LOTFA
CONTRACT NO.: XX T.O.: 01

UNITED NATIONS DEVELOPMENT PROGRAM
LOTFA PROJECT AFGHANISTAN
KABUL MOI

ENGINEERING DIVISION
PERs PROJECT

UNDP / LOTFA AFGHANISTAN
KABUL, AFGHANISTAN
BUILDING 02 - PHQ
MDF LOCKERS VIEW & SECTIONS

SHEET NUMBER
A–116

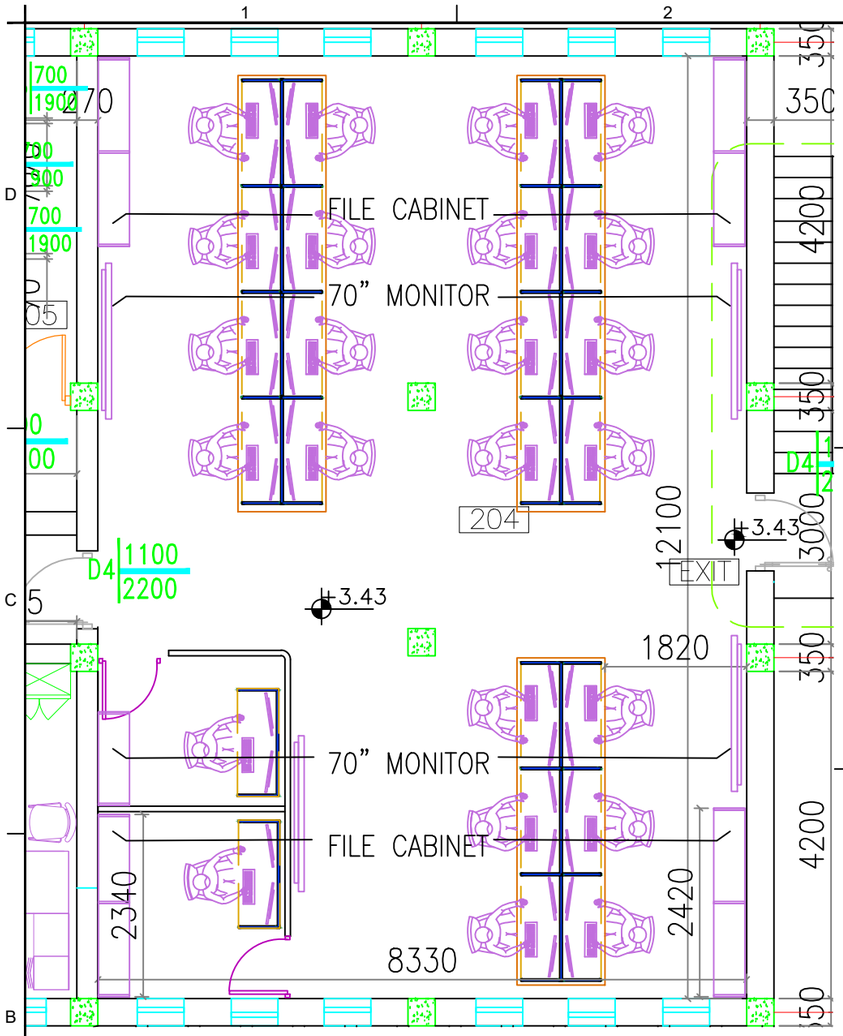

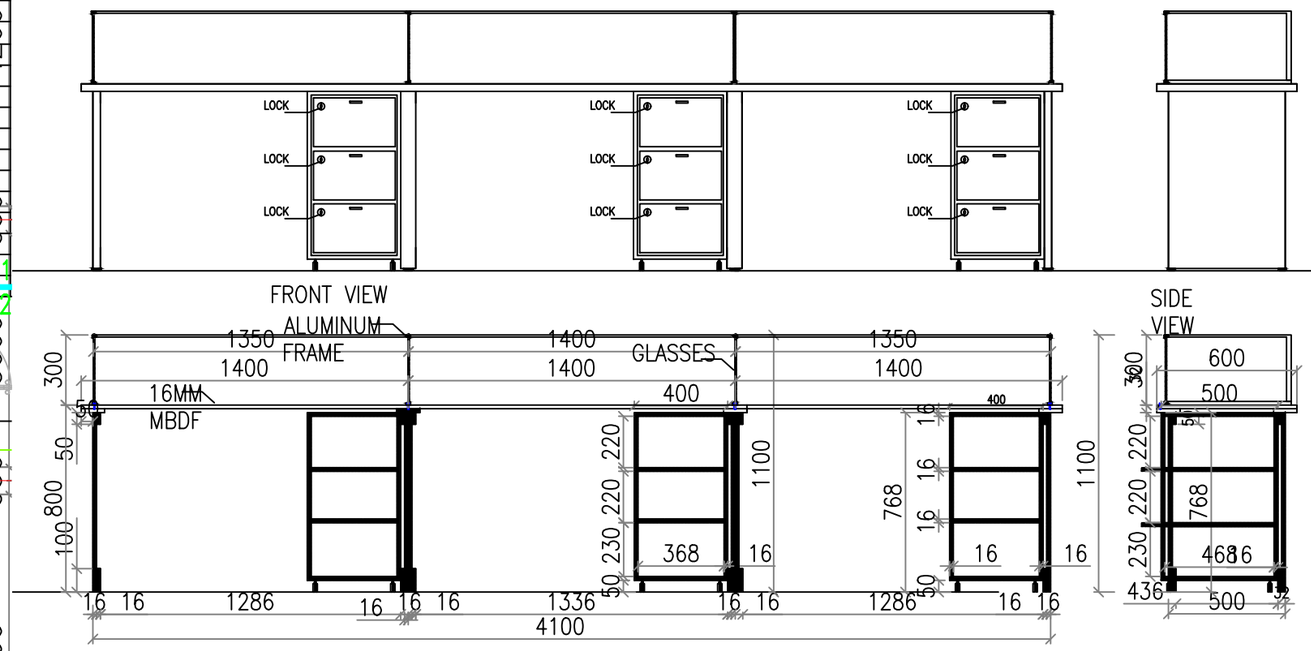

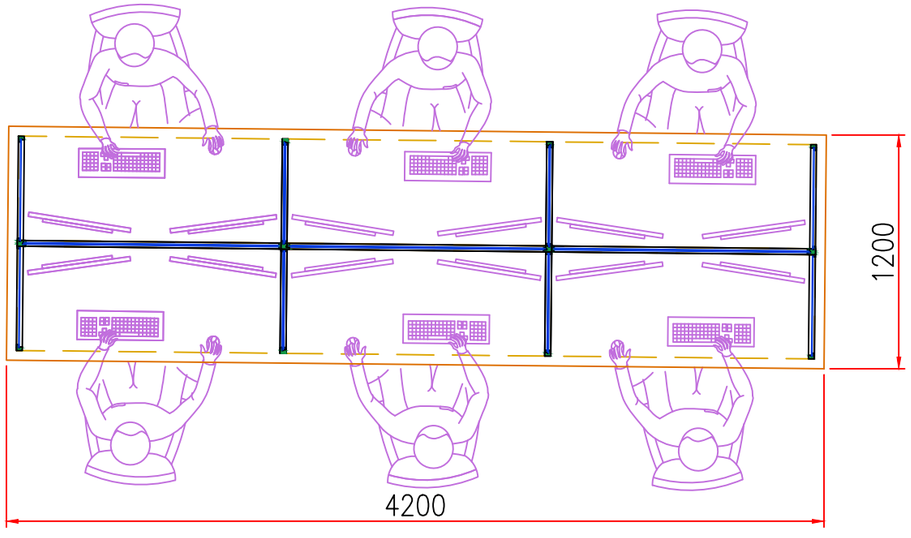

REV No.	DESCRIPTION	Date	APPROVED
3	REVISION		XX
2	100% SUBMITTAL	05.03.20	XX
1	FIRST ISSUE		XX

SCALE 1:100

DATE: 02.09.2020
DESIGNED BY: XX
SUBMITTED BY: UNDP/LOTFA
CHECKED BY: XX
CONTRACT NO.: XX T.O.: 01
APPROVED BY: XX

UNITED NATIONS DEVELOPMENT PROGRAM
LOTFA PROJECT AFGHANISTAN
KABUL MOI

ENGINEERING DIVISION

PERs PROJECT

UNDP / LOTFA AFGHANISTAN

KABUL, AFGHANISTAN

BUILDING 02 - PHQ
CALL CENTER MODIFY SETUP

SHEET NUMBER
A–117

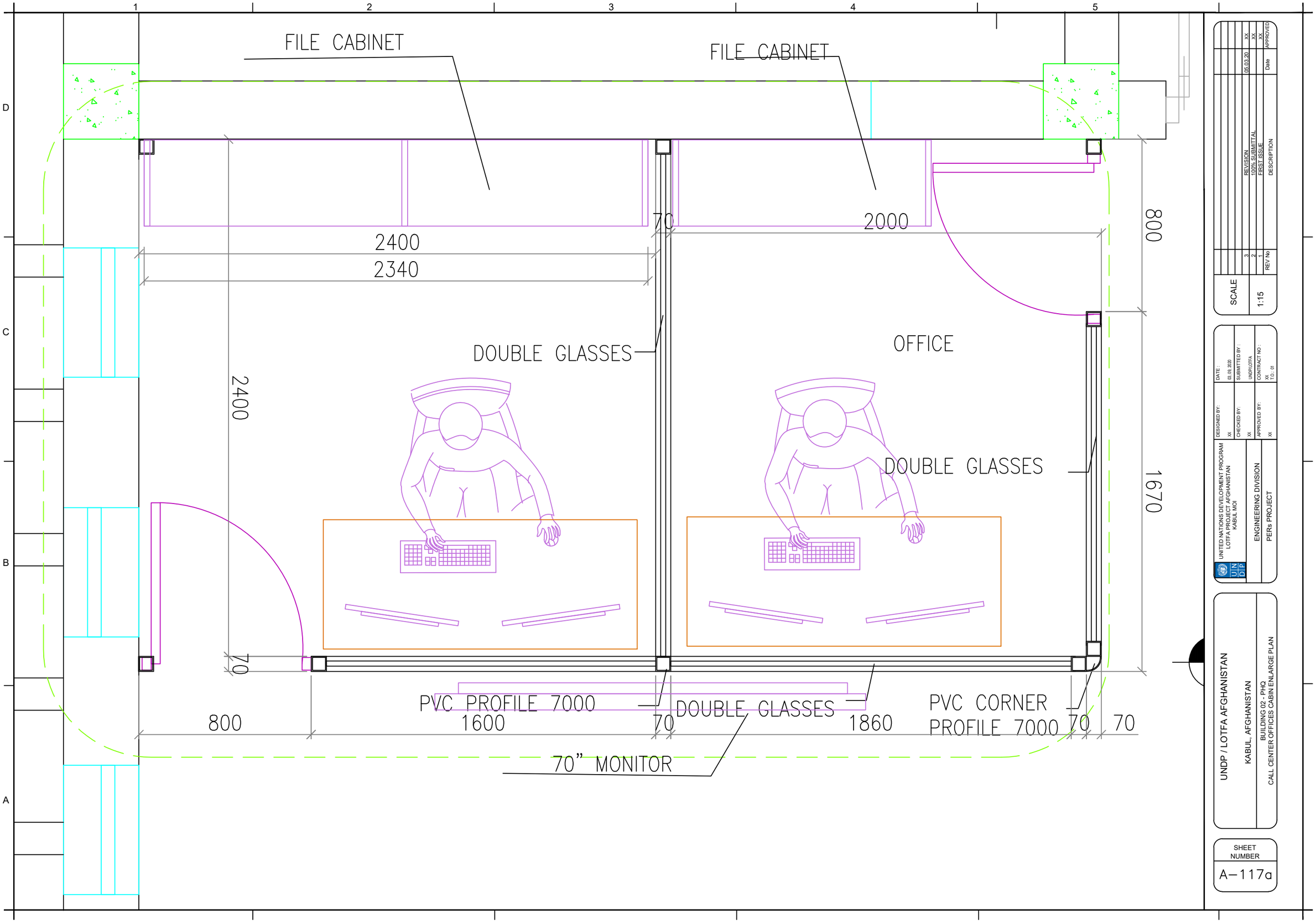
FILE CABINET
FILE CABINET
2400
2340
70
2000
800
DOUBLE GLASSES
OFFICE
2400
DOUBLE GLASSES
1670
70
PVC PROFILE 7000
1600
70
DOUBLE GLASSES
1860
PVC CORNER
PROFILE 7000
70
70
800
70" MONITOR
REVISION
100% SUBMITTAL
FIRST ISSUE
DESCRIPTION
Date
05.03.20
XX
XX
XX
APPROVED
REV No
SCALE
1:15
DATE:
02.09.2020
SUBMITTED BY:
UNDP/LOTFA
CONTRACT NO.:
XX
T.O.: 01
DESIGNED BY:
XX
CHECKED BY:
XX
APPROVED BY:
XX
UNITED NATIONS DEVELOPMENT PROGRAM
LOTFA PROJECT AFGHANISTAN
KABUL MOI
ENGINEERING DIVISION
PERs PROJECT
UNDP / LOTFA AFGHANISTAN
KABUL, AFGHANISTAN
BUILDING 02 - PHQ
CALL CENTER OFFICES CABIN ENLARGE PLAN
SHEET NUMBER
A–117a

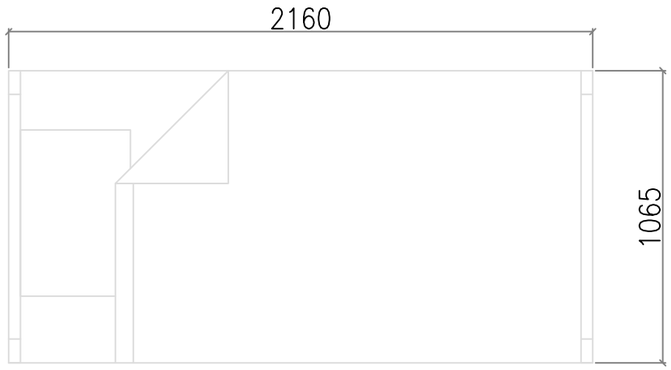

H = 940mm

1 / A-118 PLAN
SCALE 1:20

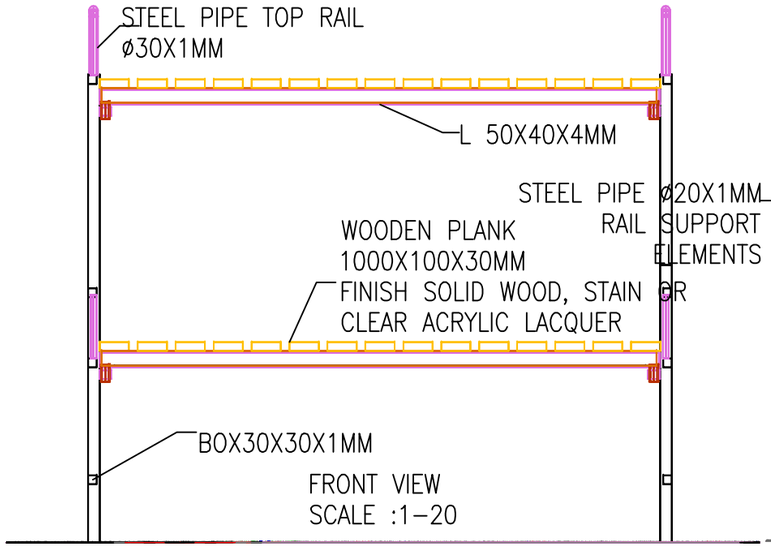

FRONT VIEW
SCALE :1-20

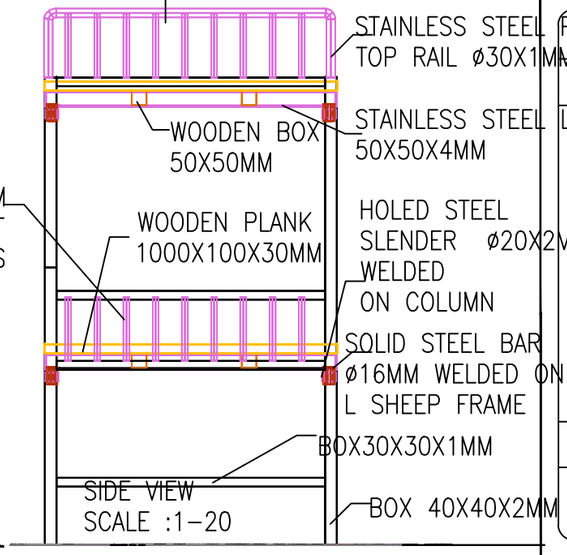

SIDE VIEW
SCALE :1-20

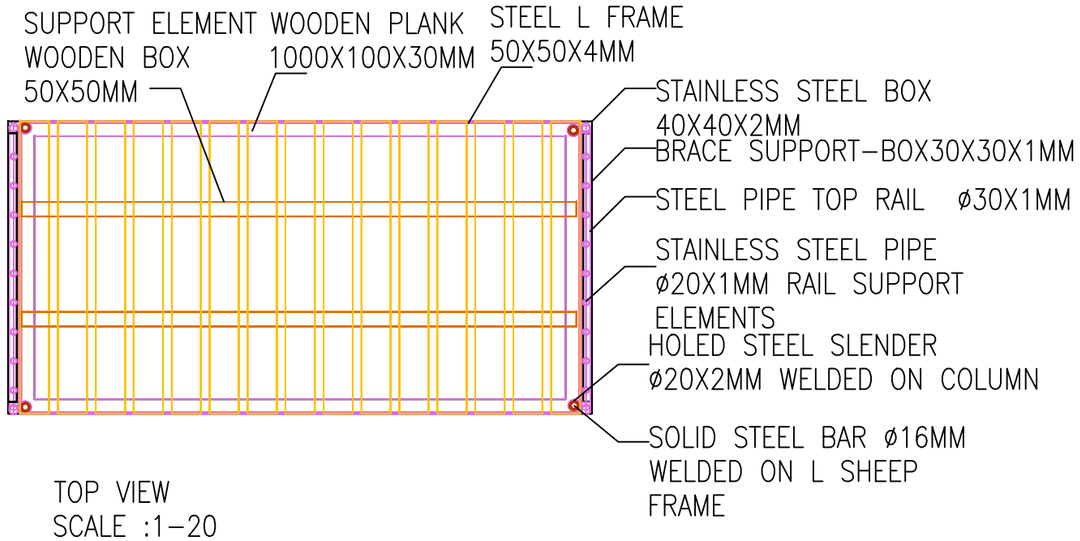

TOP VIEW
SCALE :1-20

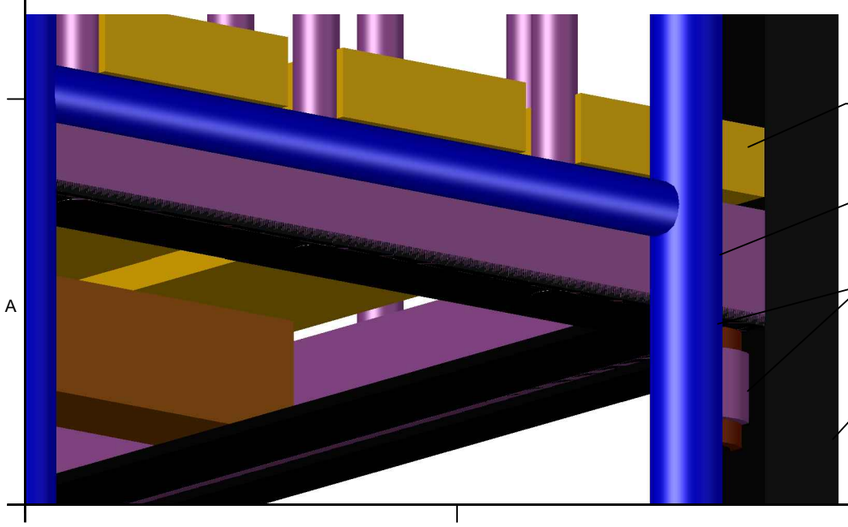

DETAIL
SCALE :1-20

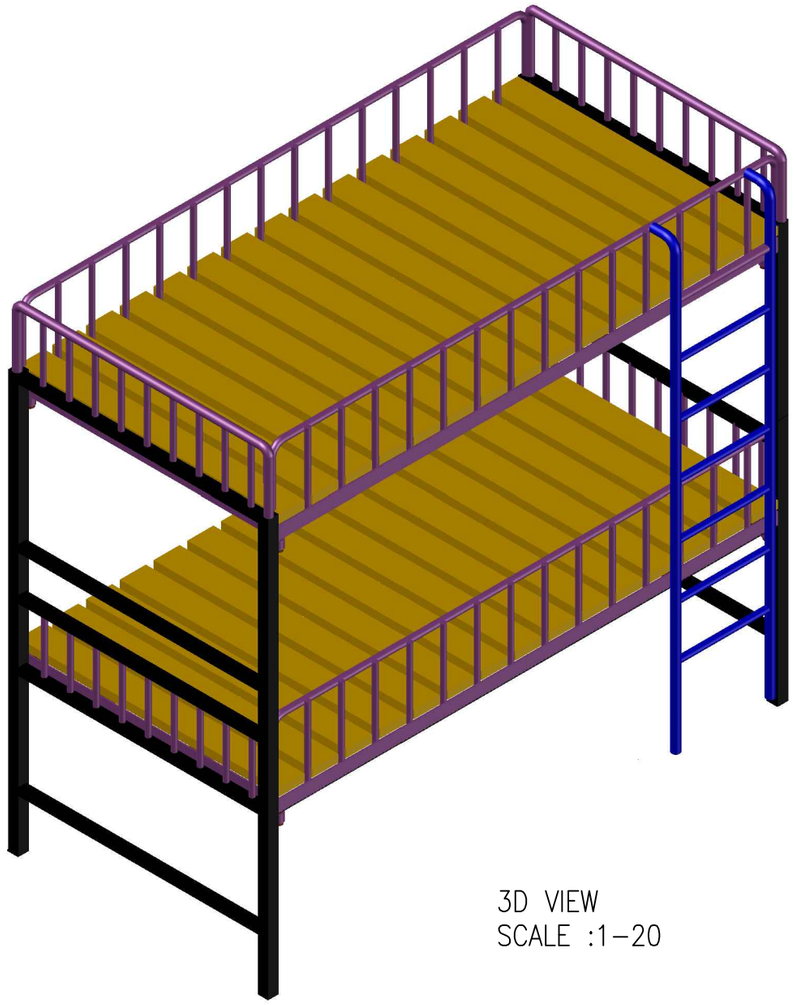

3D VIEW
SCALE :1-20

REV No.	DESCRIPTION	Date	APPROVED
3	REVISION	05.03.20	XX
2	100% SUBMITTAL		XX
1	FIRST ISSUE		XX

SCALE 1:20

DATE: 02.09.2020
DESIGNED BY: XX
SUBMITTED BY: UNDP/LOTFA
CHECKED BY: XX
CONTRACT NO.: XX
T.O.: 01
APPROVED BY: XX

UNITED NATIONS DEVELOPMENT PROGRAM
LOTFA PROJECT AFGHANISTAN
KABUL MOI

ENGINEERING DIVISION
PERs PROJECT

UNDP / LOTFA AFGHANISTAN
KABUL, AFGHANISTAN
BUILDING 02 - PHQ
DOUBLE BEDS DETAILS

SHEET NUMBER
A-118

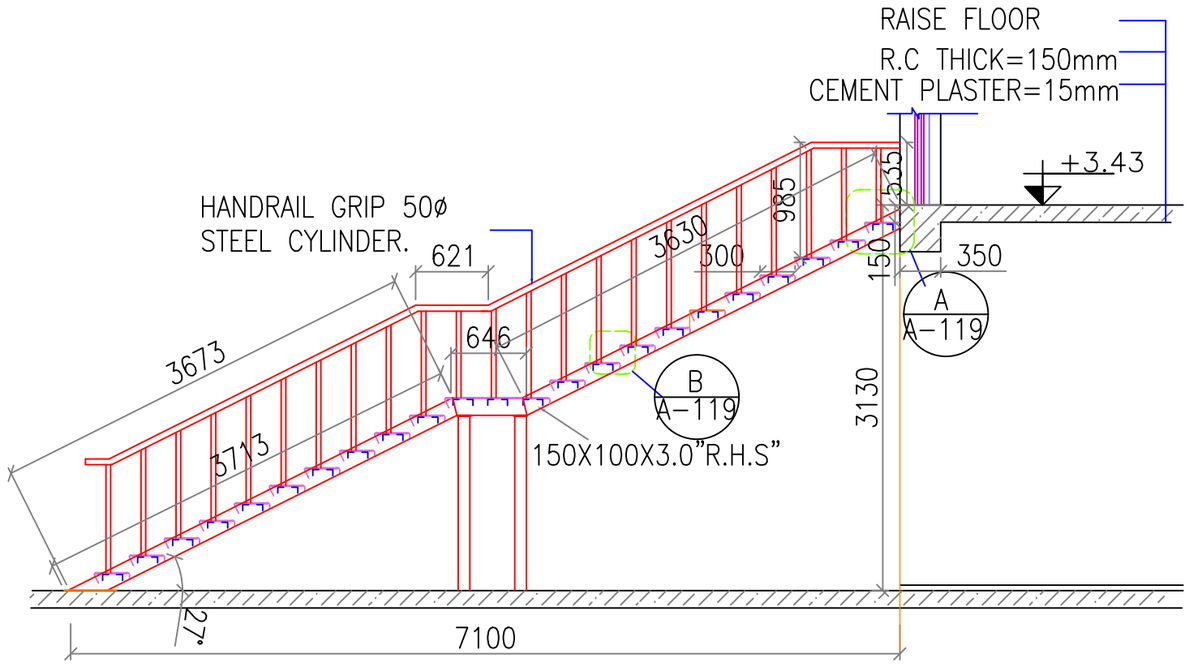

1 / A-119 STAIR CASE DETAIL (A)
SCALE 1:50

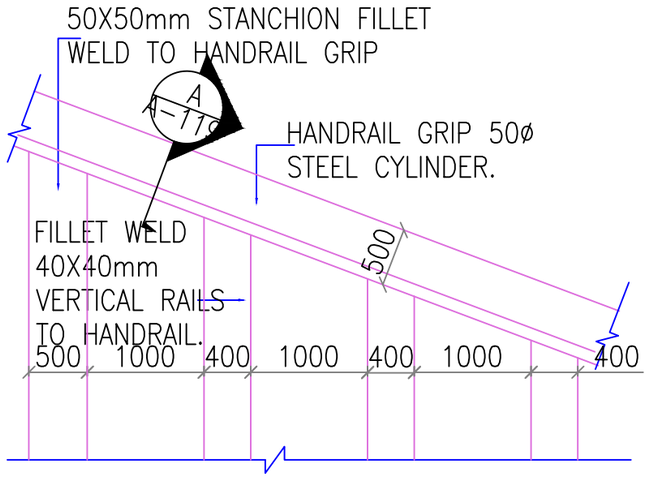

2 / A-119 HAND RAIL CONNECTION TO STANCHION DETAIL
SCALE1:5

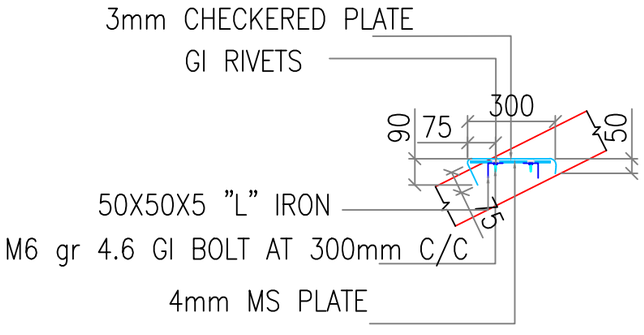

3 / A-119 DETAIL B
SCALE NTC

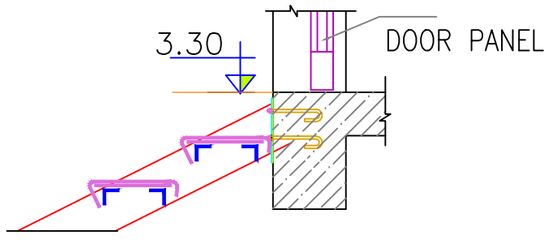

4 / A-119 DETAIL STAIRS CONNECTION TO SLAB
SCALE NTC

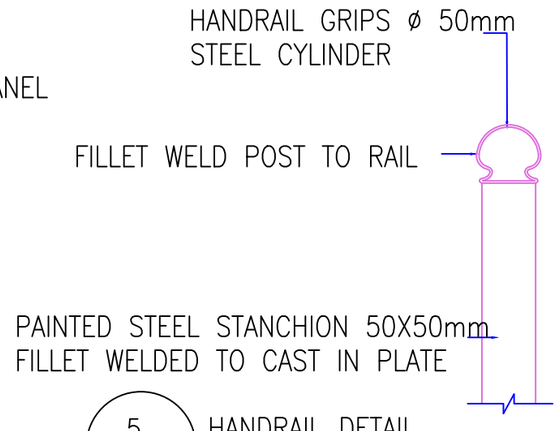

5 / A-119 HANDRAIL DETAIL
SCALE NTC

REV No.	DESCRIPTION	Date	APPROVED
3	REVISION	XX	
2	100% SUBMITTAL	05.03.20	XX
1	FIRST ISSUE	XX	XX

SCALE 1:50

DATE: 02.09.2020
SUBMITTED BY: UNDP/LOTFA
CONTRACT NO.: XX T.O. 01
DESIGNED BY: XX
CHECKED BY: XX
APPROVED BY: XX

UNITED NATIONS DEVELOPMENT PROGRAM
LOTFA PROJECT AFGHANISTAN
KABUL MOI

ENGINEERING DIVISION
PERs PROJECT

UNDP / LOTFA AFGHANISTAN
KABUL, AFGHANISTAN
BUILDING 02 - PHQ
OUT SIDE STEEL STAIR DETAILS

SHEET NUMBER
A-119

ABEN30

Light concrete panels dimensions 600*600*30 mm are coated at bottom , top and panel edges 0,5 mm galvanized steel.

PANEL PROPERTIES	
Panel Dimensions	: 600x600x30mm
Top Surface	: Galvanized Steel
Bottom Surface	: Galvanized Steel
Edge Surface	: Galvanized Steel
Panel Weight	: 13,8 Kg/ Panel
Panel Core	: Light Concrete
Working Load	: 3,5 kN
Maximum Load	: 10,5kN
Fire Class	: A1
Panel Load Stretch Class	: 5A (2mm)

1 / A–121 MEMBRANCE , DEC–TEC COOLSTEO LINE

REV No.	DESCRIPTION	Date	APPROVED
3	REVISION	05.03.20	XX
2	100% SUBMITTAL		XX
1	FIRST ISSUE		XX

SCALE: NTC

DATE: 02.09.2020
SUBMITTED BY: UNDP/LOTFA
CONTRACT NO.: XX T.O.: 01
DESIGNED BY: XX
CHECKED BY: XX
APPROVED BY: XX

UNITED NATIONS DEVELOPMENT PROGRAM
LOTFA PROJECT AFGHANISTAN
KABUL MOI

ENGINEERING DIVISION
PERs PROJECT

UNDP / LOTFA AFGHANISTAN
KABUL, AFGHANISTAN
BUILDING 02 - PHQ
RAISE FLOOR DETAILS

SHEET NUMBER
A–120

STEEL STRUCTURES & STANDARDS

Steel Structures and Steel accessories of PLANART Steel Pedestals are according to European Standards BS EN 12825 : 2001 , and complying with ASTM codes including : A 123 -123M A 153-153M A 307, A 500-501 A992-992M, F436 and F844.

PEDESTAL (without stringer)	PL -CH14 (without stringer)	PL-CH16 (without stringer)	PL-CH18 (without stringer)
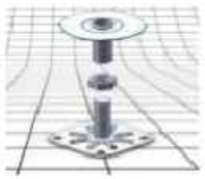			
HEAD	90 x 2 mm galvanized steel	90 x 2,5 mm galvanized steel	90 x 2,5 mm galvanized steel
PIPE	19 x 1,5 mm galvanized steel	19 x 1,5 mm galvanized steel	21 x 1,5 mm galvanized steel
BASE	90 x 90 x 2 mm galvanized steel	90 x 90 x 2 mm galvanized steel	90 x 90 x 2 mm galvanized steel
THREADED NUT	65 mm M14 galvanized steel	65 mm M16 galvanized steel	65 mm M18 galvanized steel
HEIGHT	8 - 20 cm	8 - 20 cm	8 - 20 cm
TOLERANCE	2 cm	2 cm	2 cm
UNIT WEIGHT	520 gr	550 gr	570 gr
SYSTEM WEIGHT	1716 gr	1815 gr	1881 gr
MAXIMUM LOADING CAPACITY	29,5 kN	29,3 kN	29,3 kN

PEDESTAL (with stringer)	PL-T14 (with stringer)	PL-T18 (with stringer)	PL-SSH14 (with stringer)
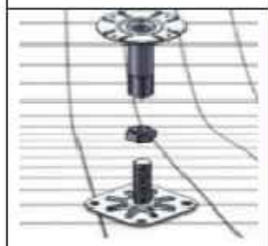			
HEAD	90 x 3 mm galvanized steel	91 x 3 mm galvanized steel	-
PIPE	23 x 1,5 mm galvanized steel	23 x 1,5 mm galvanized steel	20 x 20 mm galvanized steel
BASE	90 x 90 x 2mm galvanized steel	90 x 90 x 2mm galvanized steel	90 x 90 x 2mm galvanized steel
THREADED NUT	90 mm M14 galvanized steel	90 mm M18 galvanized steel	90 mm M14 galvanized steel
HEIGHT	20 - 120 cm	20 - 120 cm	12 - 120 cm
TOLERANCE	3,5 cm	3,5 cm	3,5 cm
UNIT WEIGHT	620 - 1.980 gr	670 - 2056 gr	625 gr
SYSTEM WEIGHT	3.874 - 8.370 gr	4.094 - 8.590 gr	2.894 - 7.327
MAXIMUM LOADING CAPACITY	25 kN	24 kN	24 kN

STRINGER	THICKNESS	DIMENSIONS
	0,8 mm	28 x 23 x 28 mm

REV No	DESCRIPTION	Date	APPROVED
3	REVISION	05.03.20	XX
2	100% SUBMITTAL		XX
1	FIRST ISSUE		XX

SCALE: NTC

DATE: 03.09.2020
DESIGNED BY: XX
CHECKED BY: XX
SUBMITTED BY: UNDP/LOTFA
APPROVED BY: XX
CONTRACT NO.: XX
T.O.: 01

UNITED NATIONS DEVELOPMENT PROGRAM
LOTFA PROJECT AFGHANISTAN
KABUL MOI

ENGINEERING DIVISION
PERs PROJECT

UNDP / LOTFA AFGHANISTAN
KABUL, AFGHANISTAN
BUILDING 02 - PHQ
RAISE PLOOR DETAILS

SHEET NUMBER
A–121

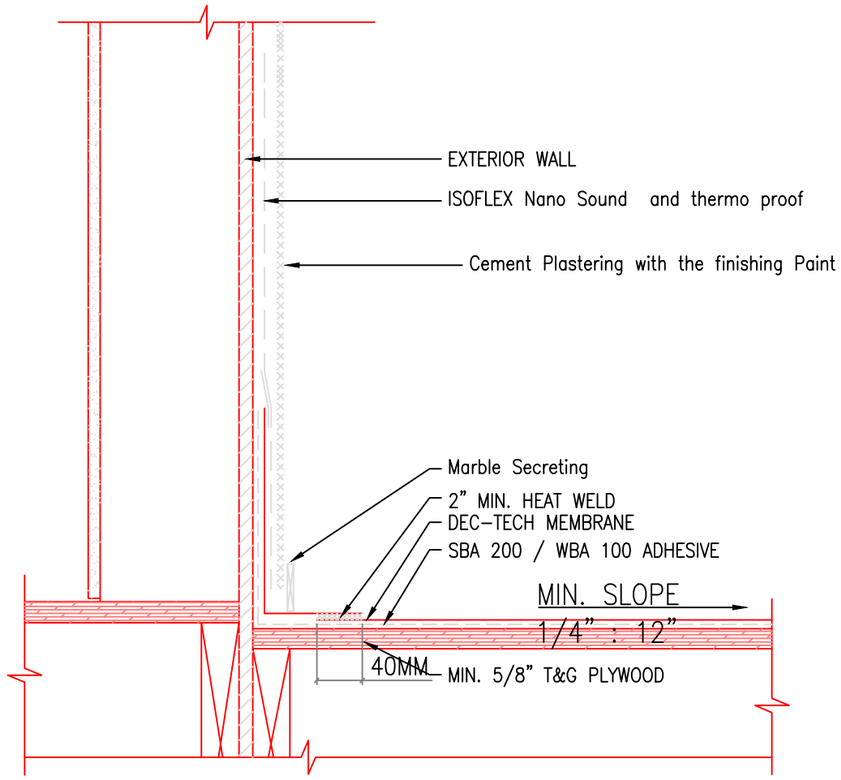

DETAIL

1
A-122

TYPICAL DETAILS

DEC-TEC "STRIP-IN" DETAIL, WITH RAINSCREEN

REV No	DESCRIPTION	Date	APPROVED
3	REVISION	05.03.20	XX
2	100% SUBMITTAL		XX
1	FIRST ISSUE		XX

SCALE: NTC

DATE : 03.09.2020
DESIGNED BY : XX
SUBMITTED BY : UNDP/LOTFA
CHECKED BY : XX
CONTRACT NO : XX T.O. 01
APPROVED BY : XX

UNITED NATIONS DEVELOPMENT PROGRAM
LOTFA PROJECT AFGHANISTAN
KABUL MOI

ENGINEERING DIVISION
PERs PROJECT

UNDP / LOTFA AFGHANISTAN
KABUL, AFGHANISTAN
BUILDING 02 - PH
WALL ACOUSTIC DETAILS

SHEET NUMBER
A-122

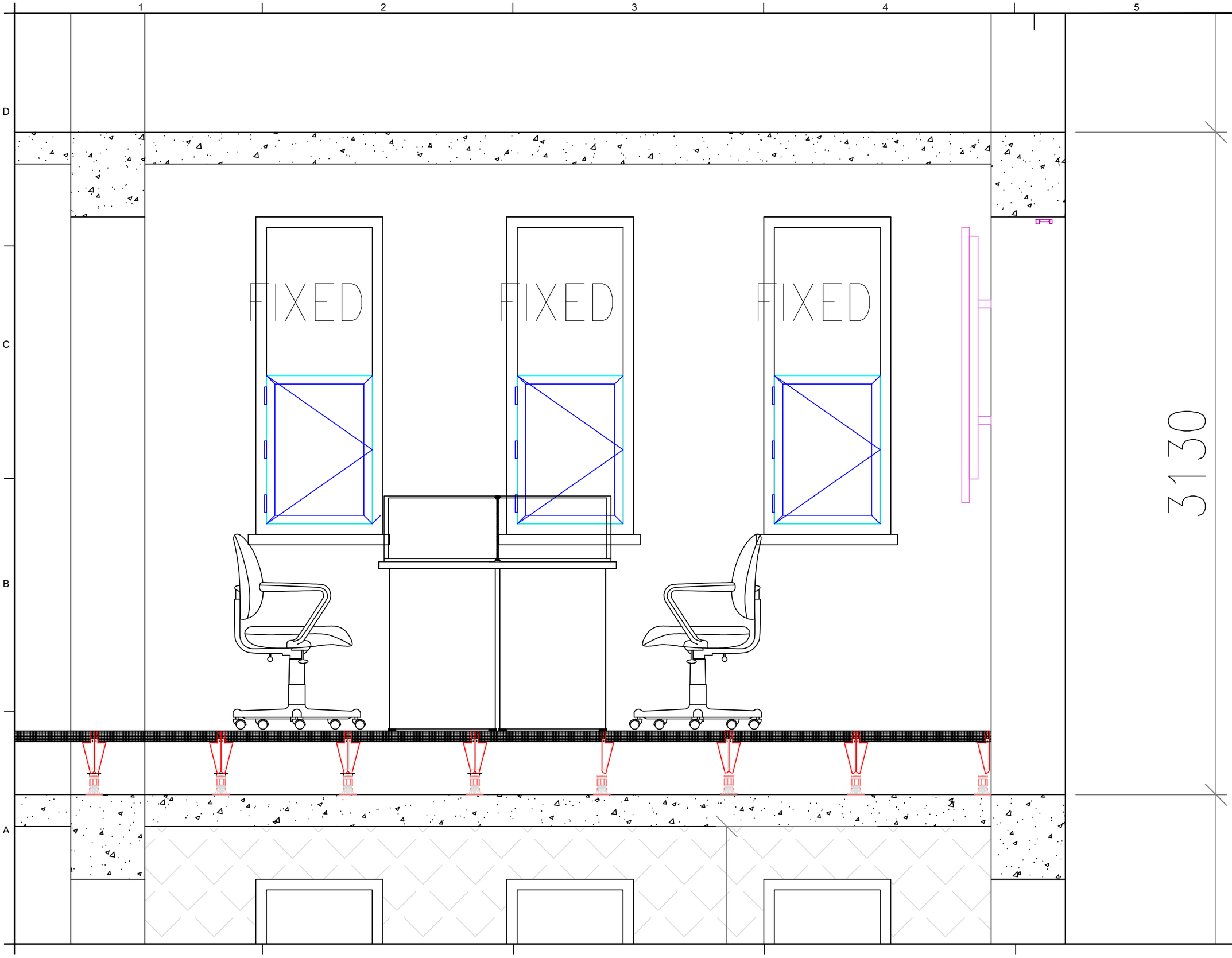

SCALE	REV No.	DESCRIPTION	Date	APPROVED
1:10	3	REVISION	XX	
	2	100% SUBMITTAL	05.03.20	XX
	1	FIRST ISSUE		XX

UNITED NATIONS DEVELOPMENT PROGRAM
LOTFA PROJECT AFGHANISTAN
KABUL MOI

ENGINEERING DIVISION
PERs PROJECT

DESIGNED BY: XX	DATE: 02.09.2020
CHECKED BY: XX	SUBMITTED BY: UNDP/LOTFA
APPROVED BY: XX	CONTRACT NO.: XX T.O.: 01

UNDP / LOTFA AFGHANISTAN

KABUL, AFGHANISTAN

BUILDING 02 - PHQ
OFFICES FURNITURE ENLARGE PLAN

SHEET NUMBER

A–123

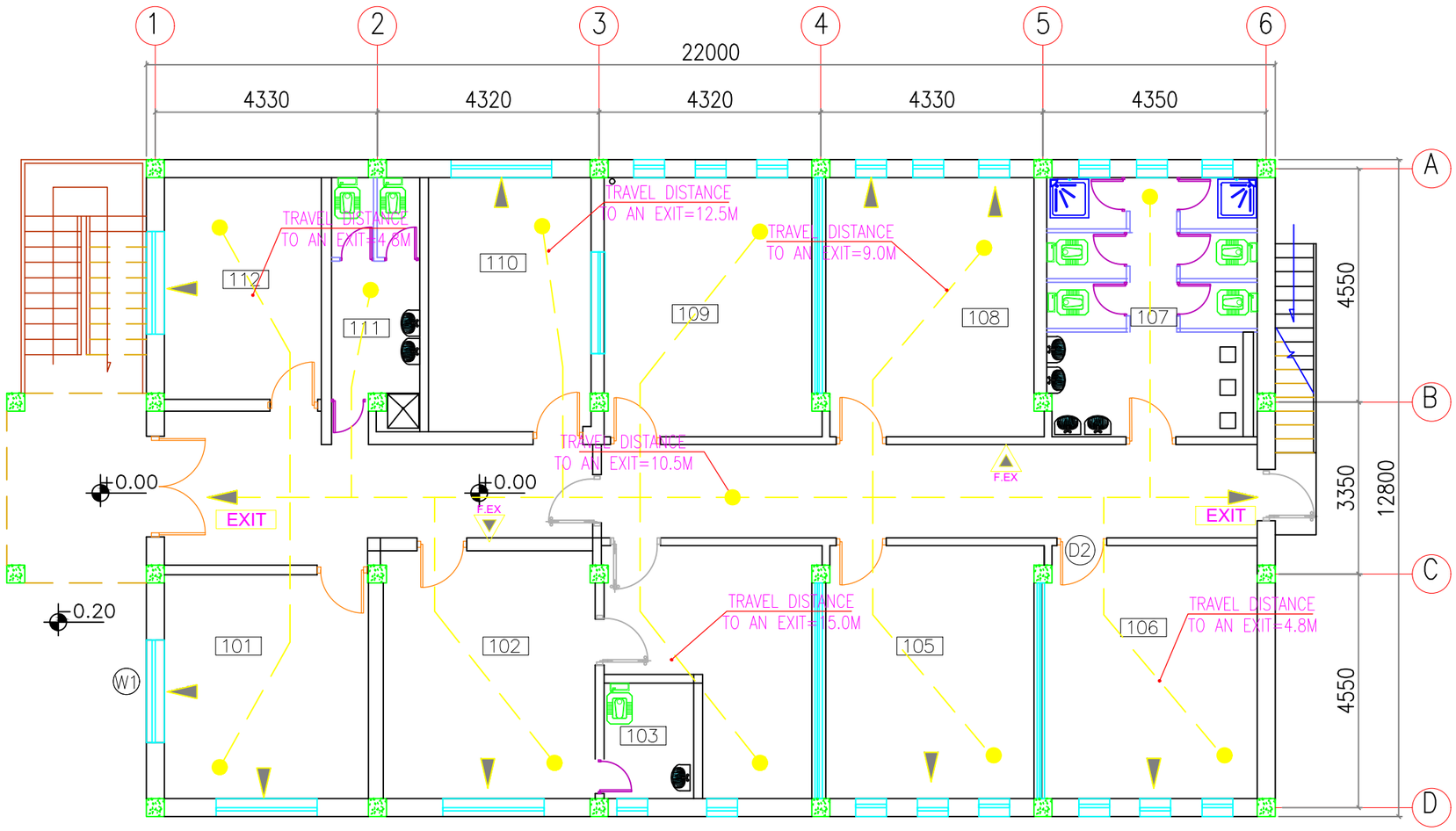

LEGEND:

1– COMMON PATH OF TRAVEL

2– 4KG–ABC TYPE FIRE EXTINGUISHER– MOUNTING HEIGHT 1067MM ABOVE FINISHED FLOOR — F.EX

3– EXIT SIGN LOCATION — EXIT

4– DENOTES STARTING POINT FOR TRAVEL DISTANCE

5– DIRECTION OF TRAVEL

6– OPERABLE CASEMENT WINDOW USED AS SECONDARY MEANS OF EGRESS IN SLEEPING AREA

1 / A–124 PROPOSE GROUND FLOOR PLAN

SCALE: 1:100

REV No.	DESCRIPTION	Date	APPROVED
3	REVISION	XX	
2	100% SUBMITTAL	05.03.20	XX
1	FIRST ISSUE	XX	XX

SCALE 1:100

DATE: 02.09.2020
SUBMITTED BY: UNOPS/LOTFA
CONTRACT NO.: XX T.O.: 01
DESIGNED BY: XX
CHECKED BY: XX
APPROVED BY: XX

UNITED NATIONS DEVELOPMENT PROGRAM
LOTFA PROJECT AFGHANISTAN
KABUL MOI

ENGINEERING DIVISION
PERs PROJECT

UNDP / LOTFA AFGHANISTAN
KABUL, AFGHANISTAN
BUILDING 02 - PHQ
SECURITY OPERATION FACILITY & LIFE SAFETY PLAN

SHEET NUMBER
A–124

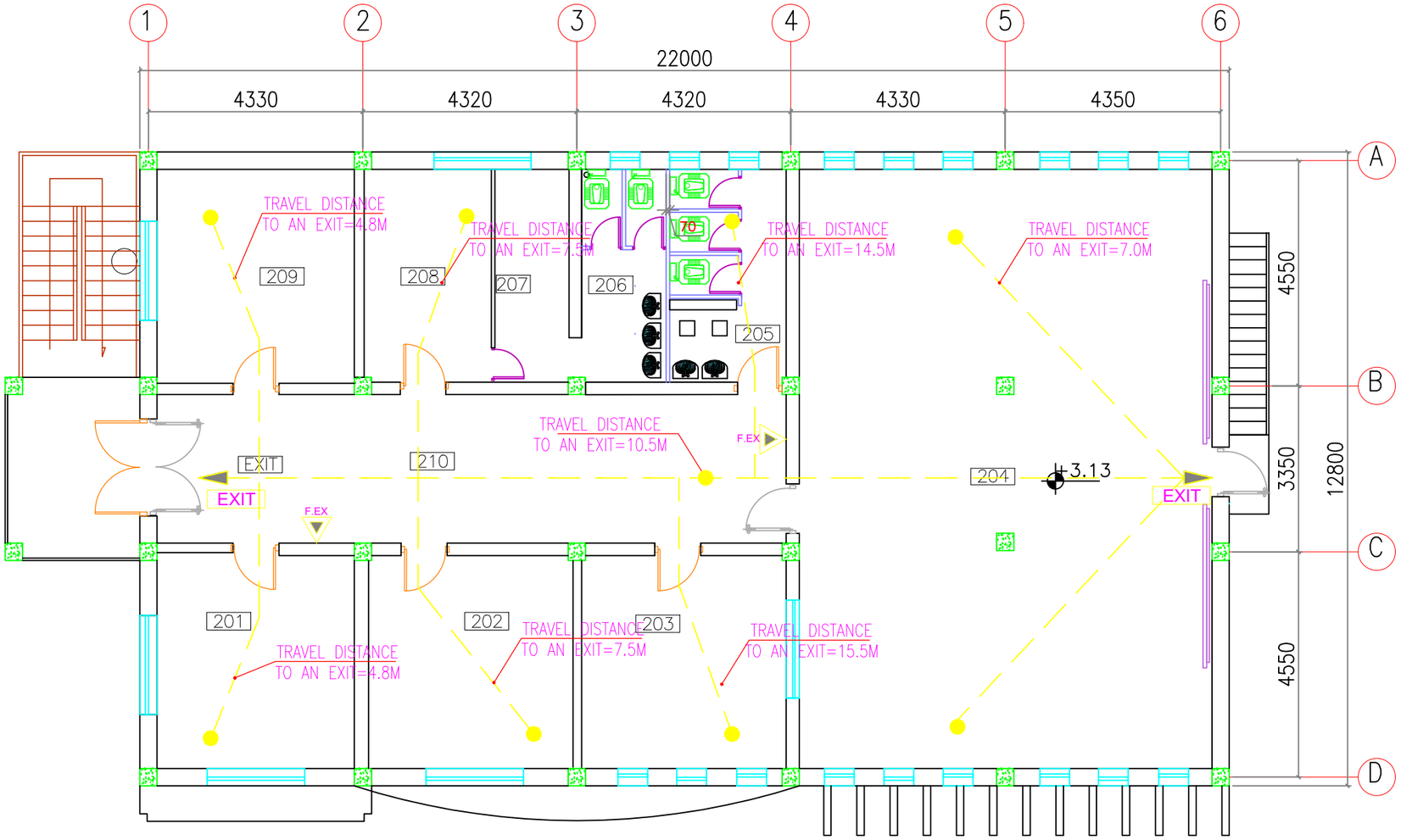

1

A–125

PROPOSE FIRST FLOOR PLAN

SCALE: 1:100

REV No.	DESCRIPTION	Date	APPROVED
3	REVISION	05.03.20	XX
2	100% SUBMITTAL	XX	XX
1	FIRST ISSUE	XX	XX

SCALE 1:100

DATE: 02.09.2020
DESIGNED BY: XX
SUBMITTED BY: UNDP/LOTFA
CHECKED BY: XX
CONTRACT NO.: XX T.O.: 01
APPROVED BY: XX

UNITED NATIONS DEVELOPMENT PROGRAM
LOTFA PROJECT AFGHANISTAN
KABUL MOI

ENGINEERING DIVISION
PERs PROJECT

UNDP / LOTFA AFGHANISTAN
KABUL, AFGHANISTAN
BUILDING 02 - PHQ
SECURITY OPERATION FACILITY & LIFE SAFETY PLAN

SHEET NUMBER
A–125

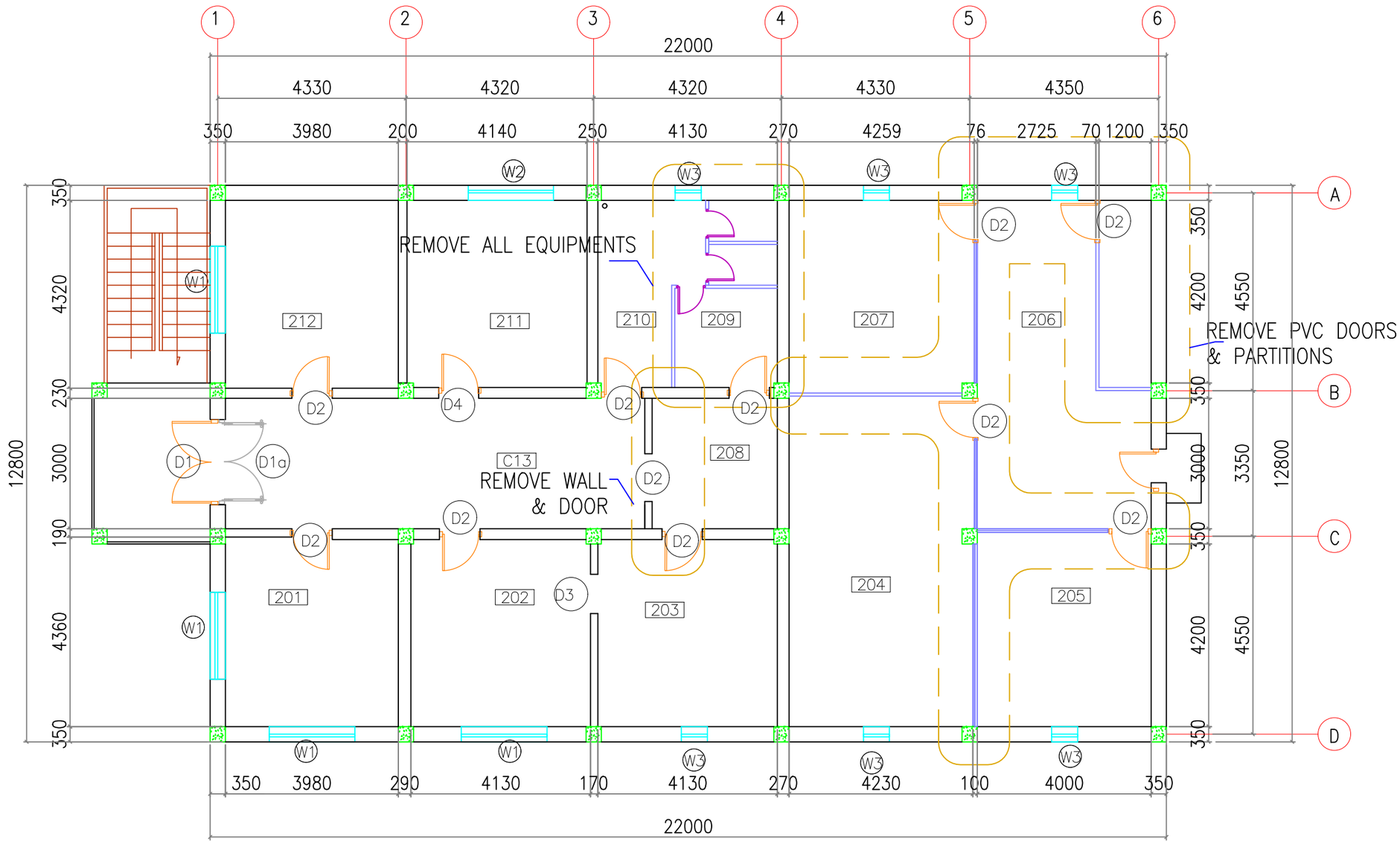

1 A-102 EXISTING FIRSTD FLOOR PLAN
SCALE: 1:100

REV No	DESCRIPTION	Date	APPROVED
3	REVISION	05.03.20	XX
2	100% SUBMITTAL	XX	XX
1	FIRST ISSUE	XX	XX

SCALE 1:100

DATE: 02.09.2020
SUBMITTED BY: UNDP/LOTFA
CONTRACT NO.: XX T.O.: 01
DESIGNED BY: XX
CHECKED BY: XX
APPROVED BY: XX

UNITED NATIONS DEVELOPMENT PROGRAM
LOTFA PROJECT AFGHANISTAN
KABUL MOI

ENGINEERING DIVISION
PERs PROJECT

UNDP / LOTFA AFGHANISTAN
KABUL, AFGHANISTAN
BUILDING 02 - PHQ
EXISTING FIRST FLOOR PLAN

SHEET NUMBER
A-103