United Nations Development Programme
Programme of Assistance to the Palestinian People
برنامج الامم المتحدة الانمائي/ برنامج مساعدة الشعب الفلسطيني

من الشعب الياباني
From the People of Japan

بلدية أريحا
Jericho Municipality

سلطة المياه الفلسطينية
PALESTINIAN WATER AUTHORITY

Support to Infrastructure Works for Phase II: Jericho Agro-Industrial Park and Deep Water Well Drilling

Contract No.: .....

Construction of Deep Well

DRAWINGS

FINAL
2021-09-19

مركز الهندسة والتخطيط
center for engineering and planning

DRAWING INDEX

SHEET NO.	DRAWING NO.	DESCRIPTION
GENERAL DRAWINGS		
001/105	JAIP-W-GD-01	Cover Sheet
002/105	JAIP-W-GD-02	Drawing Index
003/105	JAIP-W-GD-03	Location Map
004/105	JAIP-W-GD-04	Symbols and Abbreviations
WELL SITE DRAWINGS		
005/105	JAIP-W-SITE-C-01	Site Topographic Survey
006/105	JAIP-W-SITE-C-02	Site Boundary Coordinates
007/105	JAIP-W-SITE-C-03	Site Plan
008/105	JAIP-W-SITE-M-04	Site Piping Paln
009/105	JAIP-W-SITE-C-05	Pavement and Drainage Site Plan
CONTROL AND SCADA CHART AND GENERAL DETAILS		
010/105	JAIP-W-PID-01	Instrumentation P & ID - I
011/105	JAIP-W-PID-02	Instrumentation P & ID - II
WELL AND BOOSTER STATION PIPING		
012/105	JAIP-W-PP-M-01	Deep Well, Balancing Tank and Bosster Station Piping Plan
013/105	JAIP-W-PP-M-02	Piping Section Details - I
014/105	JAIP-W-PP-M-03	Piping Section Details - II
015/105	JAIP-W-PP-M-04	Piping Section Details - III
016/105	JAIP-W-PP-M-05	Well Section Details and Reinforcement
017/105	JAIP-W-PP-M-06	Well Pump Earthing and Receptacles Plan
018/105	JAIP-W-PP-M-07	BPS & FMC Earthing, Lighting and Receptacles Plan
019/105	JAIP-W-PP-C-08	Plan & Profile of Over Flow & Washout Pipeline, Details of Sewer Pipe
WATER TANK DRAWINGS		
020/105	JAIP-W-TANK-A-01	Architectural Plan
021/105	JAIP-W-TANK-A-02	Section Details
022/105	JAIP-W-TANK-C-01	Tank Roof Slab and Foundation Reinforcement
023/105	JAIP-W-TANK-C-02	Tank Section Reinforcement Details and Bars Cutting List
024/105	JAIP-W-TANK-C-03	Tank Section Reinforcement Details - I
025/105	JAIP-W-TANK-C-04	Tank Section Reinforcement Details - II
026/105	JAIP-W-TANK-C-05	Tank Section Reinforcement Details - III
FACILITIES DRAWINGS		
OPERATING ROOM		
027/105	JAIP-W-OR-A-01	Floor Plan
028/105	JAIP-W-OR-A-02	Elevations
029/105	JAIP-W-OR-A-03	Sections
030/105	JAIP-W-OR-C-01	Columns Plan
031/105	JAIP-W-OR-C-02	Footings Plan
032/105	JAIP-W-OR-C-03	Columns and Footings Details
033/105	JAIP-W-OR-C-04	Reinforcement Slab - I
034/105	JAIP-W-OR-C-05	Reinforcement Slab - II
035/105	JAIP-W-OR-M-01	Waste Water Plan
036/105	JAIP-W-OR-M-02	Domestic Water Plan
037/105	JAIP-W-OR-M-03	Rainwater Drainage Plan
038/105	JAIP-W-OR-M-04	Drainage Details
039/105	JAIP-W-OR-M-05	Water Details
040/105	JAIP-W-OR-E-01	Electrical Details
CHLORINATION ROOM		
041/105	JAIP-W-CR-A-01	Floor Plan
042/105	JAIP-W-CR-A-02	Elevations & Sections
043/105	JAIP-W-CR-C-01	Columns Plan
044/105	JAIP-W-CR-C-02	Footings Plan
045/105	JAIP-W-CR-C-03	Columns and Footings Details
046/105	JAIP-W-CR-C-04	Reinforcement Slab - I
047/105	JAIP-W-CR-C-05	Reinforcement Slab - II
048/105	JAIP-W-CR-M-01	Rainwater Drainage Plan
049/105	JAIP-W-CR-M-02	Hypo-Chlorination System
050/105	JAIP-W-CR-E-01	Electrical Details
ELECTRICAL ROOM		
051/105	JAIP-W-ER-A-01	Floor Plan
052/105	JAIP-W-ER-A-02	Elevations & Sections
053/105	JAIP-W-ER-C-01	Columns Plan
054/105	JAIP-W-ER-C-02	Footings Plan
055/105	JAIP-W-ER-C-03	Columns and Footings Details
056/105	JAIP-W-ER-C-04	Reinforcement Slab - I
057/105	JAIP-W-ER-C-05	Reinforcement Slab - II
058/105	JAIP-W-ER-M-01	Air Conditioning and Rain Water Trap Details
059/105	JAIP-W-ER-E-01	Electrical Equipment Room
ELECTRICAL DTAILS		
060/105	JAIP-W-SITE-E-01	SLD and CS Symbology
061/105	JAIP-W-SITE-E-02	PID Symbology
062/105	JAIP-W-SITE-E-03	Plan Symbology
063/105	JAIP-W-SITE-E-04	Lighting Fixture Schedule
064/105	JAIP-W-SITE-E-05	Single Line Diagram
065/105	JAIP-W-SITE-E-06	MCC Sections Elevation
066/105	JAIP-W-SITE-E-07	Monitoring and Control System
067/105	JAIP-W-SITE-E-08	Monitoring and Control System Panels
068/105	JAIP-W-SITE-E-09	Well Pump - Control Schematics
069/105	JAIP-W-SITE-E-10	Chlorine Pump - Control Schematics
070/105	JAIP-W-SITE-E-11	External Street Light - Control Schematics
071/105	JAIP-W-SITE-E-12	Booster Pump - Control Schematics
072/105	JAIP-W-SITE-E-13	Outdoor Lights Plan
073/105	JAIP-W-SITE-E-14	Site Conduits Plan
074/105	JAIP-W-SITE-E-15	Duct Banks
075/105	JAIP-W-SITE-E-16	Power Conduits Schedules
076/105	JAIP-W-SITE-E-17	Control Conduits Schedule
077/105	JAIP-W-SITE-E-18	Earthing System
078/105	JAIP-W-SITE-E-19	Lightning System
079/105	JAIP-W-SITE-E-20	CCTV System Plan
080/105	JAIP-W-SITE-E-21	CCTV System Diagram
STANDARD DETAILS		
081/105	JAIP-W-DET-C-01	Booster Station Plan Detail
082/105	JAIP-W-DET-C-02	Booster Station Sections and Structural Details
083/105	JAIP-W-DET-A-03	Fuel Tank Dimensional Plan
084/105	JAIP-W-DET-C-04	Fuel Tank Section Details
085/105	JAIP-W-DET-C-05	Fuel Tank Reinforcement Details
086/105	JAIP-W-DET-C-06	Retaining Wall, Fence and Main Gate Details
087/105	JAIP-W-DET-C-07	Water Tank Hand Rail Sections and Details
088/105	JAIP-W-DET-A-08	Water Tank Float Level Indicator and Ladder Layout
089/105	JAIP-W-DET-C-09	Water Tank Float Level Indicator Sections and Details
090/105	JAIP-W-DET-C-10	Ladders and Cage Details
091/105	JAIP-W-DET-C-11	Miscellaneous Details - I
092/105	JAIP-W-DET-C-12	Miscellaneous Details - II
093/105	JAIP-W-DET-C-13	Trenches Details - I
094/105	JAIP-W-DET-C-14	Trenches Details - II
095/105	JAIP-W-DET-C-15	Window Details
096/105	JAIP-W-DET-C-16	Steel Protection Details
097/105	JAIP-W-DET-C-17	Doors Details - I
098/105	JAIP-W-DET-C-18	Doors Details - II
099/105	JAIP-W-DET-C-19	Doors Details - III
100/105	JAIP-W-DET-C-20	Doors Details - IV
101/105	JAIP-W-DET-E-21	Standard Details - I
102/105	JAIP-W-DET-E-22	Standard Details - II
103/105	JAIP-W-DET-E-23	Standard Details - III
104/105	JAIP-W-DET-E-24	Standard Details - IV
105/105	JAIP-W-DET-E-25	Standard Details - V
ANNEXES		
ANNEX 01: JAIP Well & Booster PS Instruments & Devices List		
ANNEX 02: IOs List of JAIP Well & Booster PS		
ANNEX 03: JAIP Well & Booster Monitor & Control Data Points		
ANNEX 04: JAIP Well & Pump Station - Electrical Design		

NOTES

NOTES

GD: GENERAL DRAWING
W: WELL
PP: PIPING
OR: OPERATING ROOM
CR: CHLORINATION ROOM
ER: ELECTRICAL ROOM
C: CIVIL DRAWING
A: ARCHITECTURAL DRAWING
M: MECHANICAL DRAWING
E: ELECTRICAL DRAWING

Rev.	Date	Description	Drawn	Checked	Approved
2	24.08.2021	Draft Detailed Design	BM	OB	BA
1	01.08.2021	Draft Detailed Design	BM	OB	BA

Project
Support to Infrastructure Works for Phase II:
Jericho Agro-Industrial Park and Deep Water Well Drilling
Contract No. .....

Subject
Detail Design
Construction of Deep Well and Transmission Pipeline for JAIP
Well Site
Drawing Index

Designed: Samed Burnat
Drawn: Bahaa Al Mur
Checked: Osama Bazzour
Approved: Bassam Abu Zahra
File Name: JAIP-WELL-DI.dwg
Date: 24-08-2021
Scale: N.T.S
Size: A1
Drawing No.: JAIP-W-GEN- 02
Sheet: 002/105
Rev.: 01

FINAL
2021-09-19

مركز المندسة والتخطيط
center for engineering and planning

Center for Engineering and Planning
Ramallah - Palestine
Al Bireh - Al Medan St. Against Al Watanya Towers
P.O.Box 301

Owner:
From the People of Japan
من الشعب اليابانى
سلطة المياه الفلسطينية
PALESTINIAN WATER AUTHORITY

Operator:
بلدية أريحا
Jericho Municipality

Implementing Agency:
United Nations Development Programme
Programme of Assistance to the Palestinian People
برنامج الأمم المتحدة الانمائي برنامج مساعدة الشعب الفلسطيني
UNDP

This document is the property of Center for Engineering and Planning (CEP) - any duplication or transmition to third parties is forbidden without its prior approval.

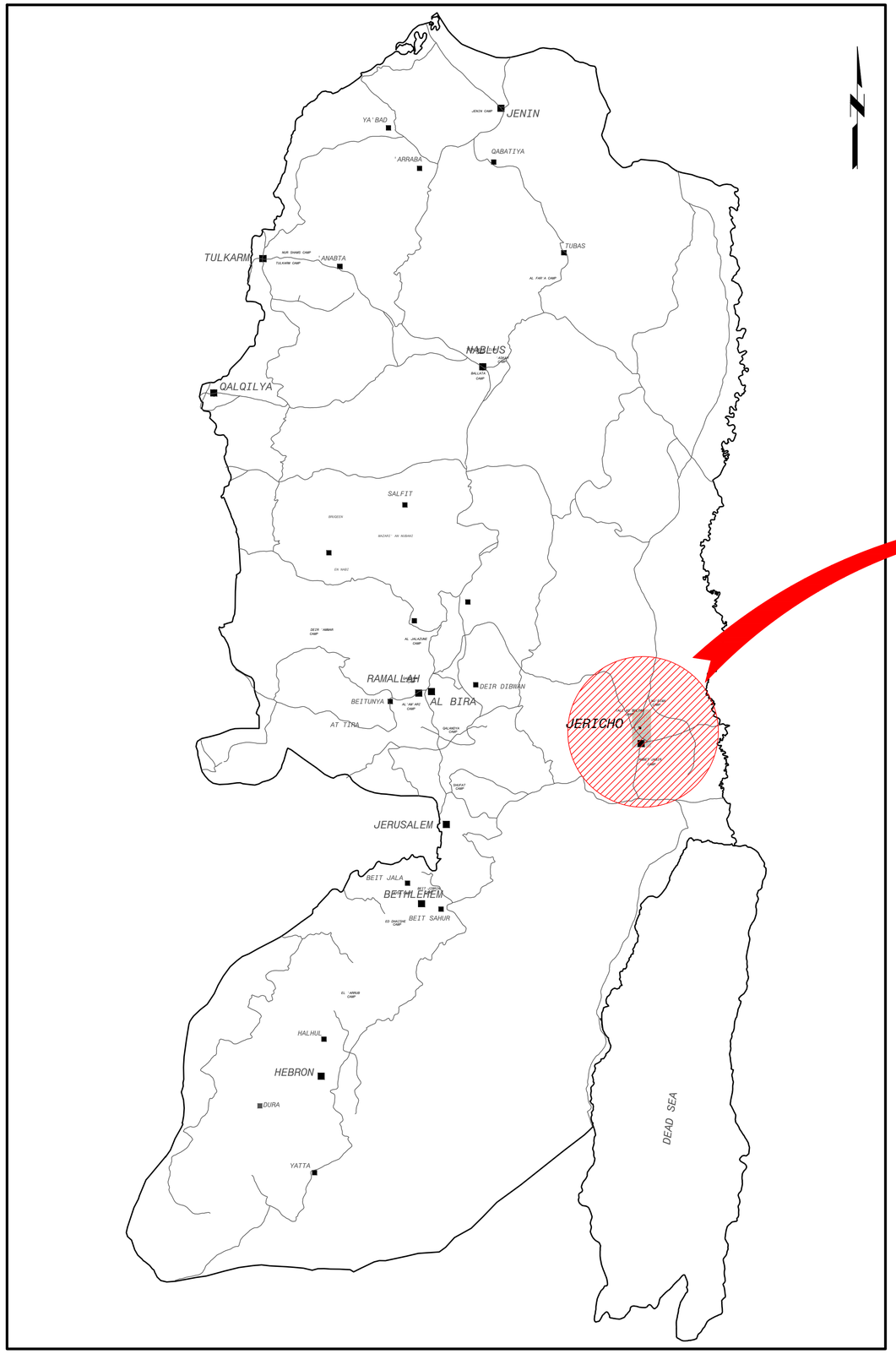

WEST BANK VICINITY MAP

N.T.S

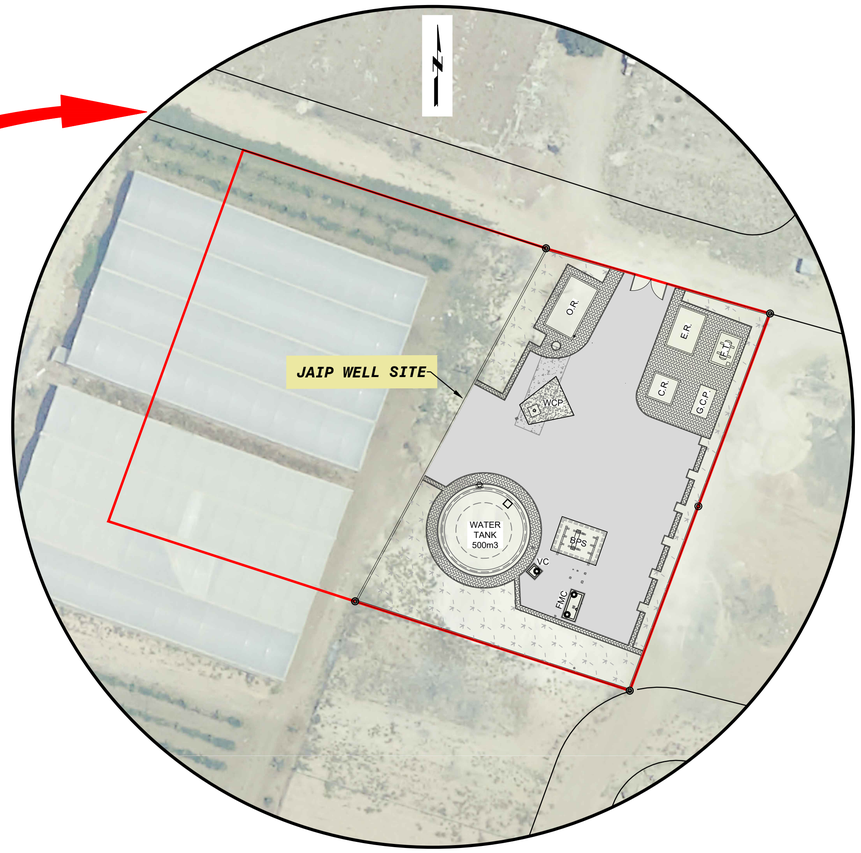

SUB-REGIONAL LOCATION MAP

N.T.S

0 GRAPHIC SCALE 5m

* IF PRINTING ON A1- 1:100
* IF PRINTING ON A3- 1:200

NOTES

NOTES

Rev.	Date	Description	Drawn	Checked	Approved
2	24.08.20213	Draft Detailed Design	BM	OB	BA
1	01.08.20213	Draft Detailed Design	BM	OB	BA

Project: Support to Infrastructure Works for Phase II: Jericho Agro-Industrial Park and Deep Water Well Drilling

Contract No.: .....

Detail Design

Subject: Construction of Deep Well and Transmission Pipeline for JAIP

Well Site Location Map

Designed: Samed Burnat
Drawn: Bahaa Al Mur
Checked: Osama Bazzour
Approved: Bassam Abu Zahra
File Name: JAIP-WELL-LM.dwg
Date: 24-08-2021
Scale: N.T.S
Size: A1
Drawing No.: JAIP-W-GD- 03
Sheet: 003/105
Rev.: 01

مركز الهندسة والتخطيط
center for engineering and planning

Center for Engineering and Planning
Ramallah, Palestine
Al Bireh - Al Medan St. Against Al Watanya Towers
P.O.Box 301

FINAL
2021-09-19

Implementing Agency:
United Nations Development Programme
Programme of Assistance to the Palestinian People
برنامج الأمم المتحدة الإنمائي برنامج مساعدة الشعب الفلسطيني
UNDP

Operator:
بلدية أريحا
Jericho Municipality

Owner:
سلطة المياه الفلسطينية
PALESTINIAN WATER AUTHORITY

Donor:
From the People of Japan
من الشعب الياباني

This document is the property of Center for Engineering and Planning (CEP) , any duplication or transmition to third parties is forbidden without its prior approval.

ABBREVIATIONS

G.L	GROUND LEVEL
I.L	INVERT LEVEL
CR	CHLORINATION ROOM
ER	ELECTRICAL ROOM
GCP	GENERATOR CONCRETE PAD
FT	FUEL TANK
WCP	WELL CONCRETE PAD
VC	VALVE CHAMBER
FMC	FLOW METER CHAMBER
BPS	BOOSTER PUMP STATION
JM	JERICHO MUNICIPALITY
HWL	HIGH WATER LEVEL
HDPE	HIGH DENSITY POLYETHYLENE
SP	STEEL PIPE
NG	NATURAL GROUND
RCE	REINFORCEMENT CONCRETE
ND	NOMINAL DIAMETER
EMWM	ELECTRO-MAGNETIC WATER METER
GV	GATE VALVE
CV	CHECK VALVE
ARV	AIR RELEASE VALVE
RV	RELIEF VALVE
STR	STRAINER
TK	TANK
BV	BALL VALVE
LS	LEVEL SWITCH
SAV	SURGE ANTICIPATING VALVE
PRV	PRESSURE REDUCING VALVE
G.S	GALVANIZED STEEL
MP	METERING PUMP
PD	PULSATION DAMPENER
PG	PRESSURE GAUGE
PV	BACK PRESSURE VALVE
DJ	DISMANTLING JOINT
IV	INJECTION VALVE
LIT	LEVEL INDICATOR TRANSMITTER
PSV	PRESSURE SUSTAINING VALVE
FCV	FLOW CONTROL VALVE
FV	FOOT VALVE
AAV	AUTOMATIC AIR VENT
GSP	GALVANIZED STEEL PIPE
FD	FLOOR DRAIN
FT	FLOOR TRAP

WC	WATER CLOSET
UPVC	UNPLASTICIZED POLYVINYL CHLORIDE
AC	AIR CONDITIONING
IDU	INDOOR UNIT
ODU	OUTDOOR UNIT
CO	CLEAN OUT
XLPE	CROSS LINKED POLYETHYLENE
PVC	POLYVINYL CHLORIDE
T/A	TO ABOVE
T/B	TO BELOW
RWP	RAIN WATER PIPE
C.W.	COLD WATER
H.W.	HOT WATER
PE	POLYETHYLENE
AHC	AUTO/HOLD/CLOSE
AM	AUTO/MANUAL
AS	AIR SUPPLY
DEV	DEVIATION
HML	HIGH/MID/LOW
HOA	HAND/OF/REMOTE
HOR	LOCAL/OFF/REMOTE
LORL	LOCKOUT STOP
OS	LOCAL/REMOTE
MOA	MANUAL/OFF/AITO
OC	OPEN/CLOSE
OCA	OPEN/CLOSE/AUTO
OLH	OFF/LOW/HIGH
OO	ON/OFF
OSC	OPEN/STOP/CLOSE
PID	PROPORTIONAL/INTEGRAL/DERIVATIVE
POT	POTENTIOMETER
RL	RAISE/LOWER
RSL	RAIS/STOP/LOWER
SD	HUTDOWN
SEL	SELECT
SP	SET POINT
SR	START/RESET
SS	START/STOP
ST	START
STR	STOP/RESET
JB	JOINT BOX
PVDF	POLYVINYLIDENE FLUORIDE
F.G.L.	FINISH GROUND LEVEL

SYMBOLS

- REDUCER DN1/DN2
- BALL VALVE
- AIR RELEASE VALVE
- GATE VALVE
- DISMANTLING JOINT
- EMWM — ELECTRO-MAGNETIC FLOW METER
- CHECK VALVE
- RELIEF VALVE
- PG — PRESSURE GAUGE
- PULSATION DAMPENER
- BACK PRESSURE VALVE
- METERING PUMP
- LEVEL SWITCH
- FOOT VALVE
- SENSORS' MEASURING ASSEMBLY (CL, PH, TURBIDITY & CONDUCTIVITY)
- STRAINER
- VERTICAL PUMP
- RESTRAINED FLEXIBLE JOINT
- SURGE ANTICIPATING VALVE
- PRESSURE REDUCING VALVE
- TRANSITION COUPLER S/PE
- BLIND FLANGE

NOTES

NOTES

Rev.	Date	Description	Drawn	Checked	Approved
2	24.08.2021	Draft Detailed Design	BM	OB	BA
1	01.08.2021	Draft Detailed Design	BM	OB	BA

Project: Support to Infrastructure Works for Phase II: Jericho Agro-Industrial Park and Deep Water Well Drilling

Contract No.: .....

Detail Design

Subject: Construction of Deep Well and Transmission Pipeline for JAIP
Well Site
Symbols and Abbreviations

Designed: Samed Burnat
Drawn: Bahaa Al Mur
Checked: Osama Bazzour
Approved: Bassam Abu Zahra
File Name: JAIP-WELL-GD.dwg
Date: 19-09-2021
Scale: 1:20
Size: A1
Drawing No.: JAIP-W-GD- 04
Sheet: 004/105
Rev.: 01

مركز الهندسة والتخطيط
center for engineering and planning

Center for Engineering and Planning
Ramallah, Palestine
Al Bireh - Al Medan St. Against Al Watanya Towers
P.O.Box 301

FINAL
2021-09-19

Donor: من الشعب الياباني From the People of Japan

Owner: سلطة المياه الفلسطينية Palestinian water Authority

Operator: بلدية أريحا Jericho Municipality

Implementing Agency: United Nations Development Programme
Programme of Assistance to the Palestinian People
برنامج الأمم المتحدة الإنمائي برنامج مساعدة الشعب الفلسطيني

This document is the property of Center for Engineering and Planning (CEP) , any duplication or transmition to third parties is forbidden without its prior approval.

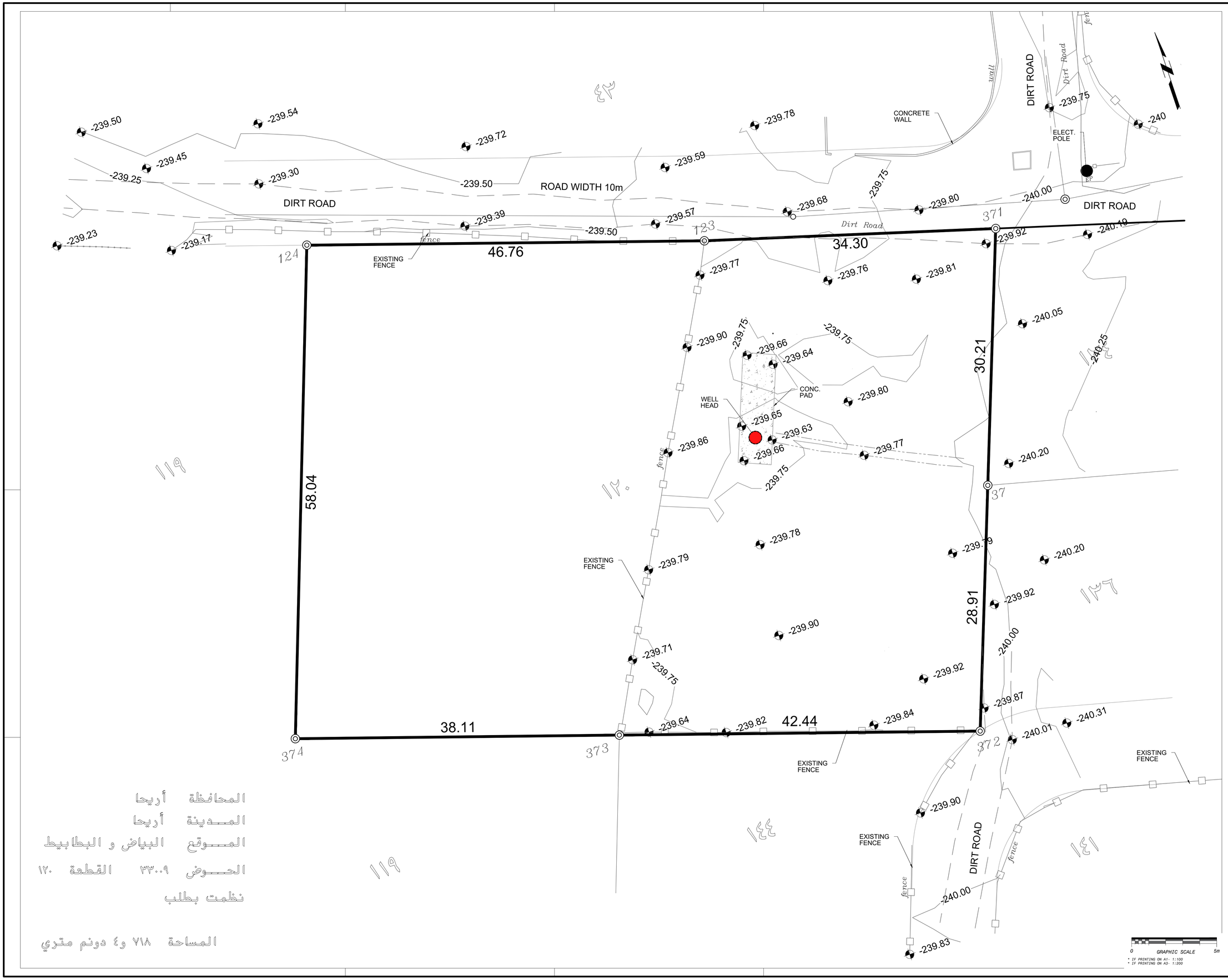

المحافظة أريحا
المدينة أريحا
الموقع البياض و البطابيط
الحوض ٣٣٠٩ القطعة ١٢٠
نظمت بطلب

المساحة ٧١٨ و٤ دونم متري

LEGENDS

- EXISTING CONCRETE
- EXISTING FENCE
- BOUNDARY OF EXISTING DIRT ROAD

NOTES

1. ALL DIMENSIONS ARE IN METERS UNLESS OTHERWISE NOTED.
2. CONTRACTOR SHALL COORDINATE WITH JERICHO MUNICIPALITY AND SITE ENGINEER BEFORE START OF WORKS.

Rev.	Date	Description	Drawn	Checked	Approved
2	24.08.2021	Draft Detail Desgin	BM	OB	BA
1	01.08.2021	Draft Detail Desgin	BM	OB	BA

Project: Support to Infrastructure Works for Phase II: Jericho Agro-Industrial Park and Deep Water Well Drilling

Contract No.: .....

Subject: Detail Design

Construction of Deep Well and Transmission Pipeline for JAIP
Well Site - Civil
Site Topographic Survey

Designed: Samed Burnat
Drawn: Bahaa Al Mur
Checked: Osama Bazzour
Approved: Bassam Abu Zahra
File Name: JAIP-WELL-SITE.dwg
Date: 19-09-2021
Scale: 1:400
Size: A1
Drawing No.: JAIP-W-SITE-C- 01
Sheet No.: 005/105
Rev.: 01

مركز الهندسة والتخطيط
center for engineering and planning

Center for Engineering and Planning
Ramallah, Palestine
Al Bireh - Al Medan St. Against Al Watanya Towers
P.O.Box 301

FINAL
2021-09-19

Donor: من الشعب الياباني
From the People of Japan

Owner: سلطة المياه الفلسطينية
PALESTINIAN WATER AUTHORITY

Operator: بلدية أريحا
Jericho Municipality

Implementing Agency: United Nations Development Programme
Programme of Assistance to the Palestinian People
برنامج الأمم المتحدة الإنمائي برنامج مساعدة الشعب الفلسطيني

This document is the property of Center for Engineering and Planning (CEP), any duplication or transmition to third parties is forbidden without its prior approval.

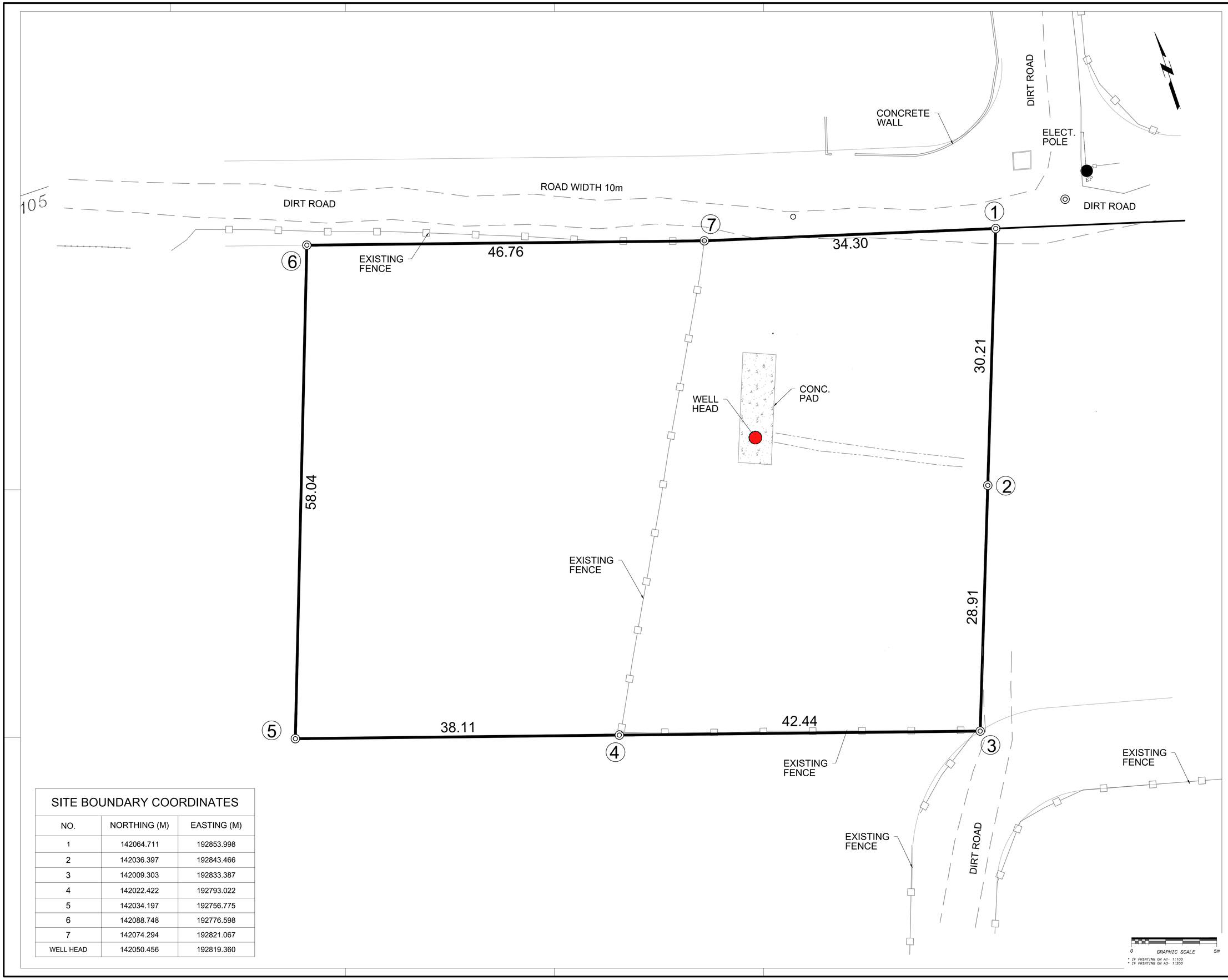

SITE BOUNDARY COORDINATES

NO.	NORTHING (M)	EASTING (M)
1	142064.711	192853.998
2	142036.397	192843.466
3	142009.303	192833.387
4	142022.422	192793.022
5	142034.197	192756.775
6	142088.748	192776.598
7	142074.294	192821.067
WELL HEAD	142050.456	192819.360

LEGENDS

- EXISTING CONCRETE
- EXISTING FENCE
- BOUNDARY OF EXISTING DIRT ROAD

NOTES

1. ALL DIMENSIONS ARE IN METERS UNLESS OTHERWISE NOTED.
2. COORDINATES ARE SHOWN IN THE 1923 PALESTINIAN GRID SYSTEM.
3. CONTRACTOR SHALL COORDINATE WITH JERICHO MUNICIPALITY AND SITE ENGINEER BEFORE START OF WORKS.

Rev.	Date	Description	Drawn	Checked	Approved
2	24.08.2021	Draft Detail Desgin	BM	OB	BA
1	01.08.2021	Draft Detail Desgin	BM	OB	BA

Project: Support to Infrastructure Works for Phase II: Jericho Agro-Industrial Park and Deep Water Well Drilling

Contract No.: .....

Subject: Detail Design

Construction of Deep Well and Transmission Pipeline for JAIP
Well Site - Civil
Site Boundary Coordinates

Designed: Samed Burnat
Drawn: Bahaa Al Mur
Checked: Osama Bazzour
Approved: Bassam Abu Zahra
File Name: JAIP-WELL-SITE.dwg
Date: 19-09-2021
Scale: 1:400
Size: A1
Drawing No.: JAIP-W-SITE-C- 02
Sheet No.: 006/105
Rev.: 01

مركز الهندسة والتخطيط
center for engineering and planning

Center for Engineering and Planning
Ramallah, Palestine
Al Bireh - Al Moslah St, Against Al Waseriya Towers
P.O.Box 301

FINAL
2021-09-19

Donor: من الشعب الياباني
From the People of Japan

Owner: سلطة المياه الفلسطينية
PALESTINIAN WATER AUTHORITY

Operator: بلدية أريحا
Jericho Municipality

Implementing Agency: United Nations Development Programme
Programme d'Assistance to the Palestinian People
برنامج الأمم المتحدة الإنمائي برنامج مساعدة الشعب الفلسطيني

This document is the property of Center for Engineering and Planning (CEP) , any duplication or transmition to third parties is forbidden without its prior approval.

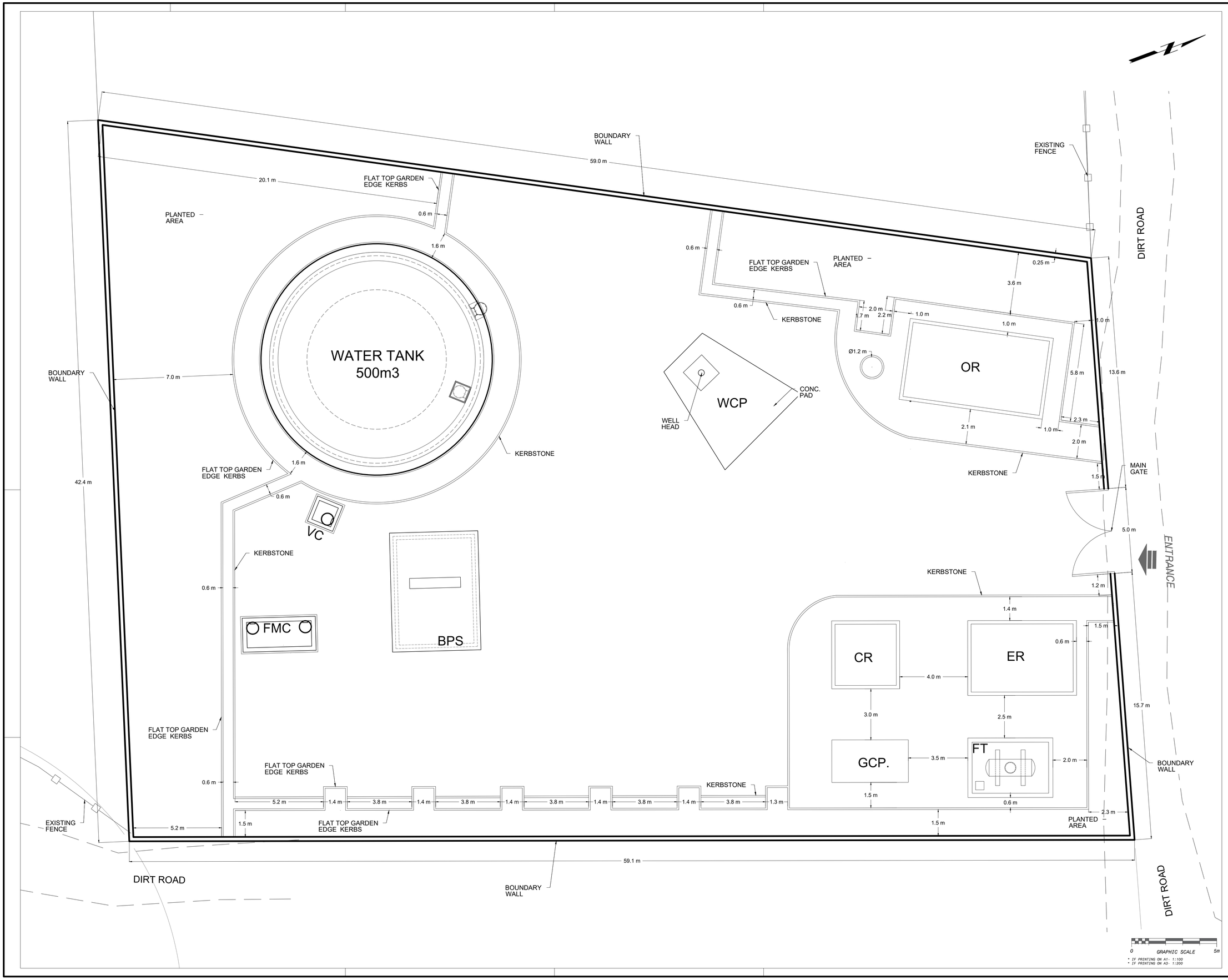

NOTES

1. ALL DIMENSIONS ARE IN METERS UNLESS OTHERWISE NOTED.
2. COORDINATES ARE SHOWN IN THE 1923 PALESTINIAN GRID SYSTEM.
3. CONTRACTOR SHALL COORDINATE WITH JERICHO MUNICIPALITY AND SITE ENGINEER BEFORE START OF WORKS.

Rev.	Date	Description	Drawn	Checked	Approved
2	24.08.2021	Draft Detail Desgin	BM	OB	BA
1	01.08.2021	Draft Detail Desgin	BM	OB	BA

Project: Support to Infrastructure Works for Phase II: Jericho Agro-Industrial Park and Deep Water Well Drilling

Contract No.: .....

Subject: Detail Design

Construction of Deep Well and Transmission Pipeline for JAIP
Well Site - Civil
Site Plan

Designed: Samed Burnat
Drawn: Bahaa Al Mur
Checked: Osama Bazzour
Approved: Bassam Abu Zahra
File Name: JAIP-WELL-SITE.dwg
Date: 19-09-2021
Scale: 1: 200
Size: A1
Drawing No.: JAIP-W-SITE-C- 03
Sheet No.: 007/105
Rev.: 01

مركز الهندسة والتخطيط
center for engineering and planning

Center for Engineering and Planning
Ramallah - Palestine
Al Bireh - Al Medan St. Against Al Watanya Towers
P.O.Box 301

FINAL
2021-09-19

Donor: From the People of Japan
Owner: سلطة المياه الفلسطينية PALESTINIAN WATER AUTHORITY
Operator: بلدية أريحا Jericho Municipality
Implementing Agency: United Nations Development Programme
Programme of Assistance to the Palestinian People
برنامج الأمم المتحدة الإنمائي برنامج مساعدة الشعب الفلسطيني

This document is the property of Center for Engineering and Planning (CEP) , any duplication or transmition to third parties is forbidden without its prior approval.

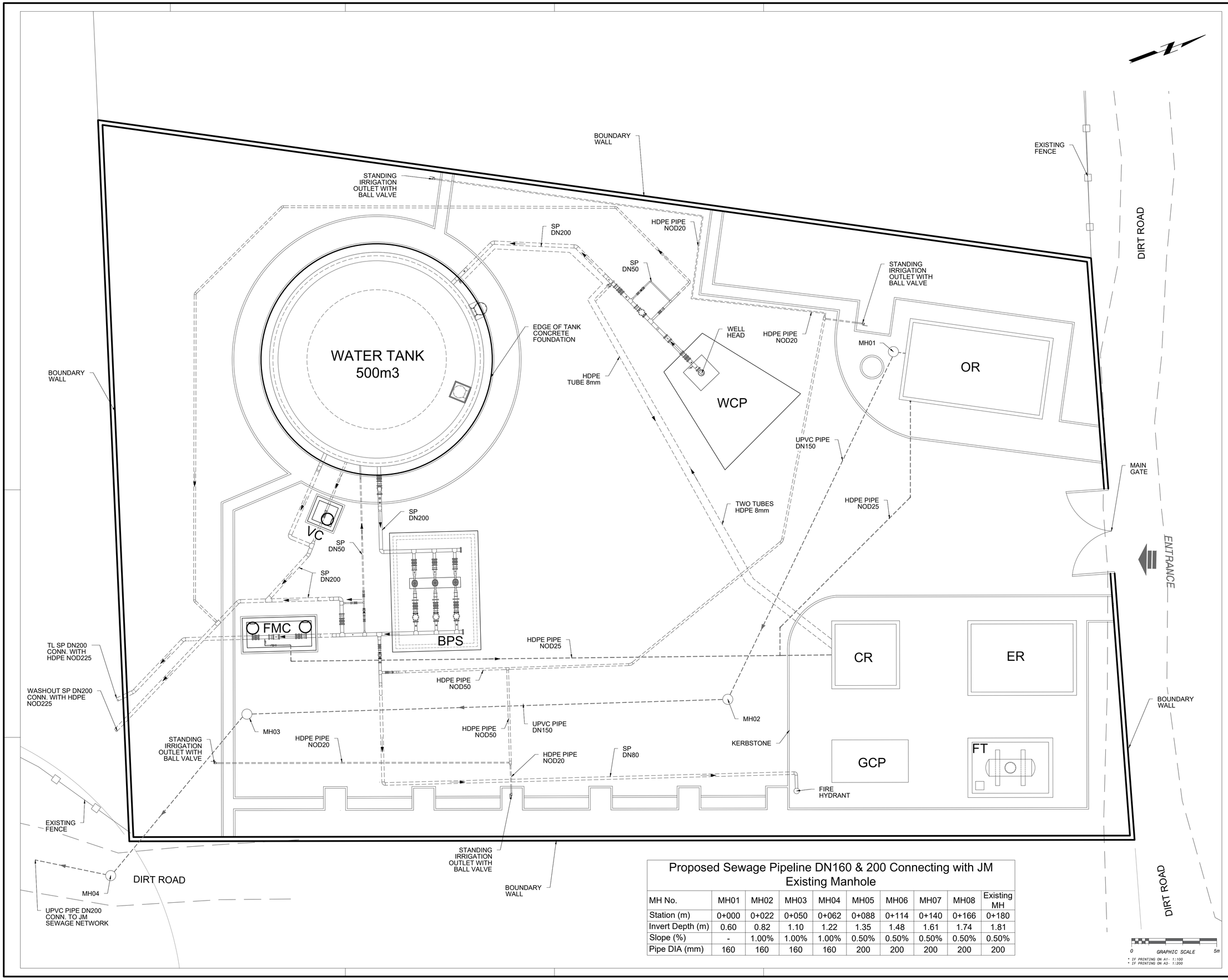

Proposed Sewage Pipeline DN160 & 200 Connecting with JM Existing Manhole

MH No.	MH01	MH02	MH03	MH04	MH05	MH06	MH07	MH08	Existing MH
Station (m)	0+000	0+022	0+050	0+062	0+088	0+114	0+140	0+166	0+180
Invert Depth (m)	0.60	0.82	1.10	1.22	1.35	1.48	1.61	1.74	1.81
Slope (%)	-	1.00%	1.00%	1.00%	0.50%	0.50%	0.50%	0.50%	0.50%
Pipe DIA (mm)	160	160	160	160	200	200	200	200	200

NOTES

1. ALL DIMENSIONS ARE IN METERS UNLESS OTHERWISE NOTED.
2. COORDINATES ARE SHOWN IN THE 1923 PALESTINIAN GRID SYSTEM.
3. CONTRACTOR SHALL COORDINATE WITH JERICHO MUNICIPALITY AND SITE ENGINEER BEFORE START OF WORKS.
4. MH: SEWAGE MANHOLE.
   JM: JERICHO MUNICIPALITY.

Rev.	Date	Description	Drawn	Checked	Approved
2	24.08.2021	Draft Detail Desgin	BM	OB	BA
1	01.08.2021	Draft Detail Desgin	BM	OB	BA

Project: Support to Infrastructure Works for Phase II: Jericho Agro-Industrial Park and Deep Water Well Drilling

Contract No.: .....

Subject: Detail Design

Construction of Deep Well and Transmission Pipeline for JAIP
Well Site - Mechnical
Site Piping Paln

Designed: Samed Burnat
Drawn: Bahaa Al Mur
Checked: Osama Bazzour
Approved: Bassam Abu Zahra
File Name: JAIP-WELL-SITE.dwg
Date: 19-09-2021
Scale: 1: 200
Size: A1
Drawing No.: JAIP-W-SITE-M- 04
Sheet No.: 008/105
Rev.: 01

مركز الهندسة والتخطيط
center for engineering and planning

Center for Engineering and Planning
Ramallah, Palestine
Ali Binin - Al Medan St. Against Al Watanya Towers
P.O.Box 301

FINAL
2021-09-19

Donor: من الشعب الياباني
From the People of Japan

Owner: سلطة المياه الفلسطينية
PALESTINIAN WATER AUTHORITY

Operator: بلدية أريحا
Jericho Municipality

Implementing Agency: United Nations Development Programme
Programme of Assistance to the Palestinian People
برنامج الأمم المتحدة الإنمائي برنامج مساعدة الشعب الفلسطيني

This document is the property of Center for Engineering and Planning (CEP) , any duplication or transmitted to third parties is forbidden without its prior approval.

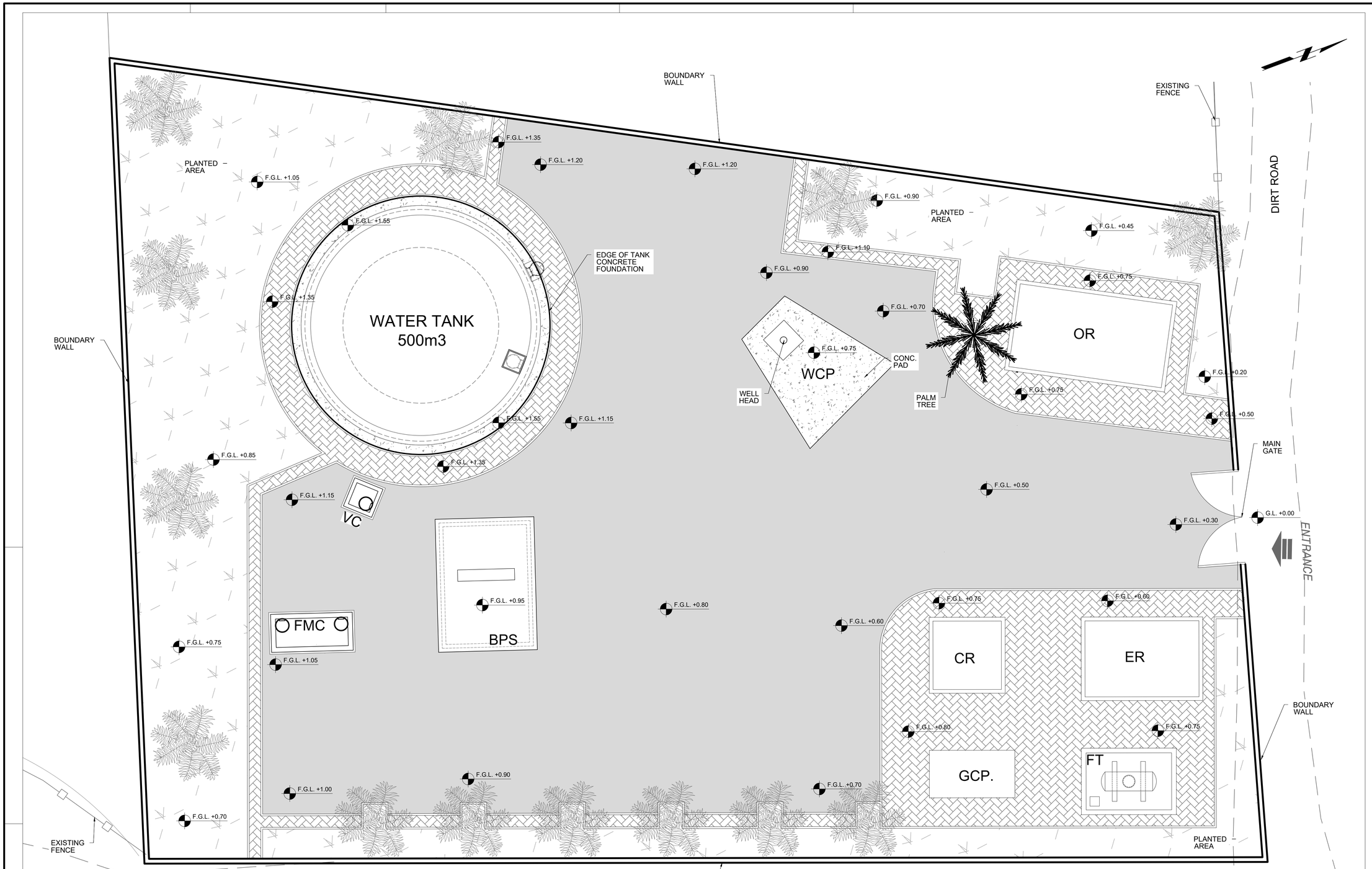

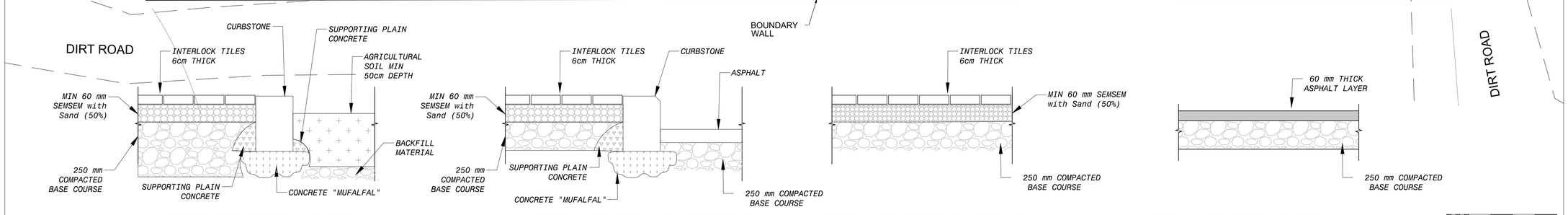

TYPICAL SITE SECTION ON CURBSTONE-I
SCALE :N.T.S

TYPICAL SITE SECTION ON CURBSTONE-II
SCALE :N.T.S

TYPICAL SITE SECTION ON INTERLOCK
SCALE :N.T.S

TYPICAL SITE SECTION ON ASPHALT
SCALE :N.T.S

0 GRAPHIC SCALE 5m

* IF PRINTING ON A1- 1:100
* IF PRINTING ON A3- 1:200

LEGENDS

- ASPHALT SURFACE
- INTERLOCK TILE
- NATURAL GROUND (PLANTING AREA "SOIL")
- CONCRETE SURFACE
- EXISTING FENCE
- BOUNDARY OF EXISTING DIRT ROAD

NOTES

1. ALL DIMENSIONS ARE IN METERS UNLESS OTHERWISE NOTED.
2. FOR SITE DIMENSIONING OF KERBSTONE REFER TO JAIP-W-SITE-M- 04
3. CONTRACTOR SHALL COORDINATE WITH JERICHO MUNICIPALITY AND SITE ENGINEER BEFORE START OF WORKS.
4. EXISTING GROUND ELEVATION AT MAIN GATE = -239.75m = +0.00

Rev.	Date	Description	Drawn	Checked	Approved
2	24.08.2021	Draft Detail Desgin	BM	OB	BA
1	01.08.2021	Draft Detail Desgin	BM	OB	BA

Project: Support to Infrastructure Works for Phase II: Jericho Agro-Industrial Park and Deep Water Well Drilling

Contract No.: .....

Subject: Detail Design

Construction of Deep Well and Transmission Pipeline for JAIP
Well Site - Civil
Pavement and Drainage Site Plan

Designed: Samed Burnat
Drawn: Bahaa Al Mur
Checked: Osama Bazzour
Approved: Bassam Abu Zahra
File Name: JAIP-WELL-SITE.dwg
Date: 19-09-2021
Scale: 1: 100
Size: A1
Drawing No.: JAIP-W-SITE-C- 05
Sheet No.: 009/105
Rev.: 01

مركز الهندسة والتخطيط
center for engineering and planning

Center for Engineering and Planning
Ramallah, Palestine
Al Bireh - Al Medan St. Against Al Watanya Towers
P.O.Box 301

FINAL
2021-09-19

Implementing Agency:
United Nations Development Programme
Programme of Assistance to the Palestinian People
برنامج الأمم المتحدة الإنمائي برنامج مساعدة الشعب الفلسطيني
UNDP

Operator:
بلدية أريحا
Jericho Municipality
سلطة المياه الفلسطينية
PALESTINIAN WATER AUTHORITY

Owner:
صندوق الشعب الياباني
From the People of Japan

Donor:

This document is the property of Center for Engineering and Planning (CEP) , any duplication or transmition to third parties is forbidden without its prior approval.

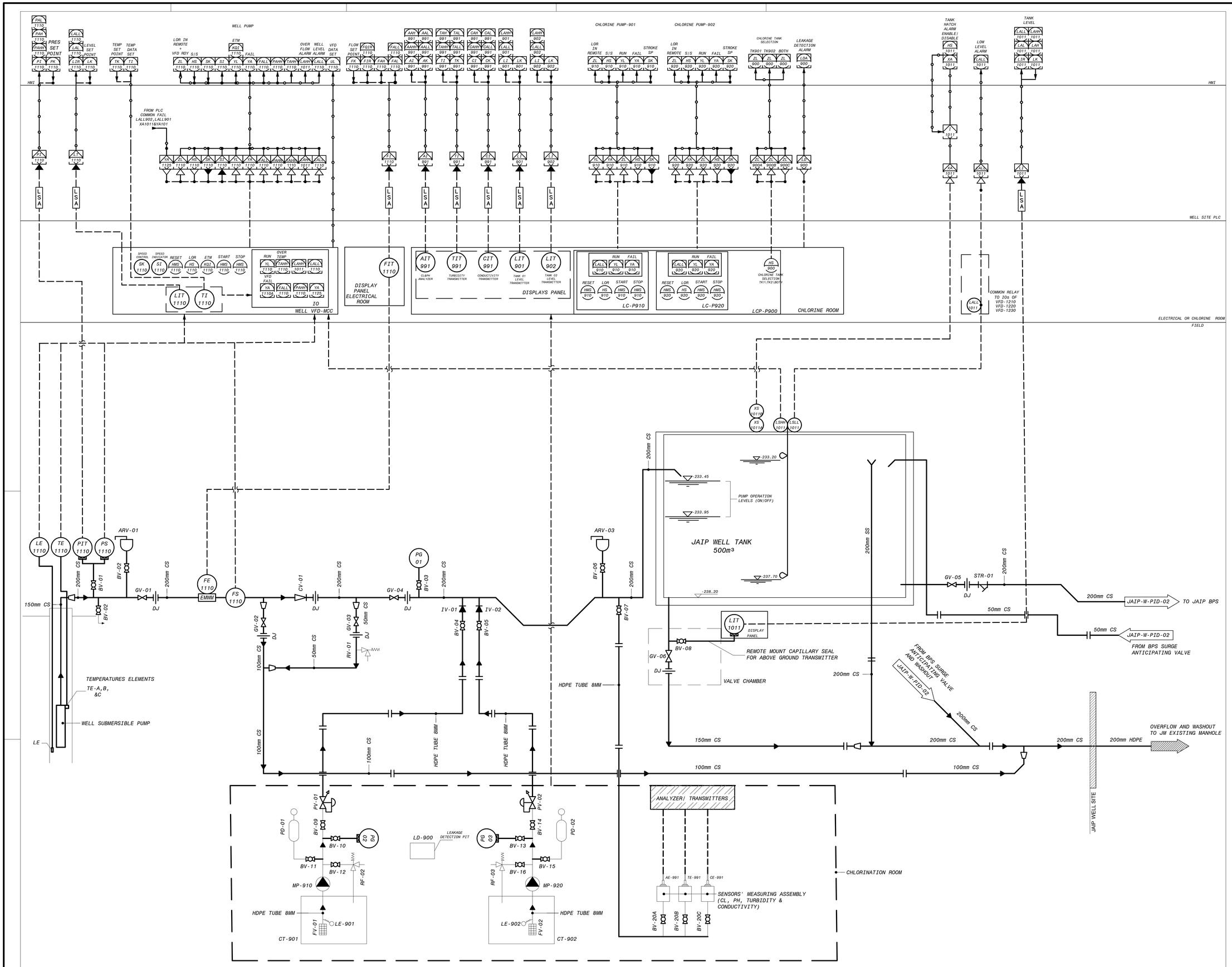

NOTES

NOTES

Rev.	Date	Description	Drawn	Checked	Approved
2	24.08.2021	Draft Detailed Design	BM	OB	BA
1	01.08.2021	Draft Detailed Design	BM	OB	BA

Project: Support to Infrastructure Works for Phase II: Jericho Agro-Industrial Park and Deep Water Well Drilling

Contract No.: .....

Subject: Detail Design

Construction of Deep Well and Transmission Pipeline for JAIP

Well Site

Instrumentation P & ID - I

Designed: Samed Burnat
Drawn: Bahaa Al Mur
Checked: Osama Bazzour
Approved: Bassam Abu Zahra
File Name: JAIP-WELL-PID.dwg
Date: 24-08-2021
Scale: N.T.S.
Size: A1
Drawing No.: JAIP- W- PID- 01
Sheet: 010/105
Rev.: 01

مركز المندسة والتخطيط
center for engineering and planning

Center for Engineering and Planning
Ramallah - Palestine
Al Birah - Al Medan St. Against Al Watanya Towers
P.O.Box 301

FINAL
2021-09-19

Donor: من الشعب الياباني From the People of Japan

Owner: سلطة المياه الفلسطينية PALESTINIAN WATER AUTHORITY

Operator: بلدية أريحا Jericho Municipality

Implementing Agency: United Nations Development Programme
Programme of Assistance to the Palestinian People
برنامج الأمم المتحدة الإنمائي برنامج مساعدة الشعب الفلسطيني

This document is the property of Center for Engineering and Planning (CEP) , any duplication or transmission to third parties is forbidden without its prior approval.

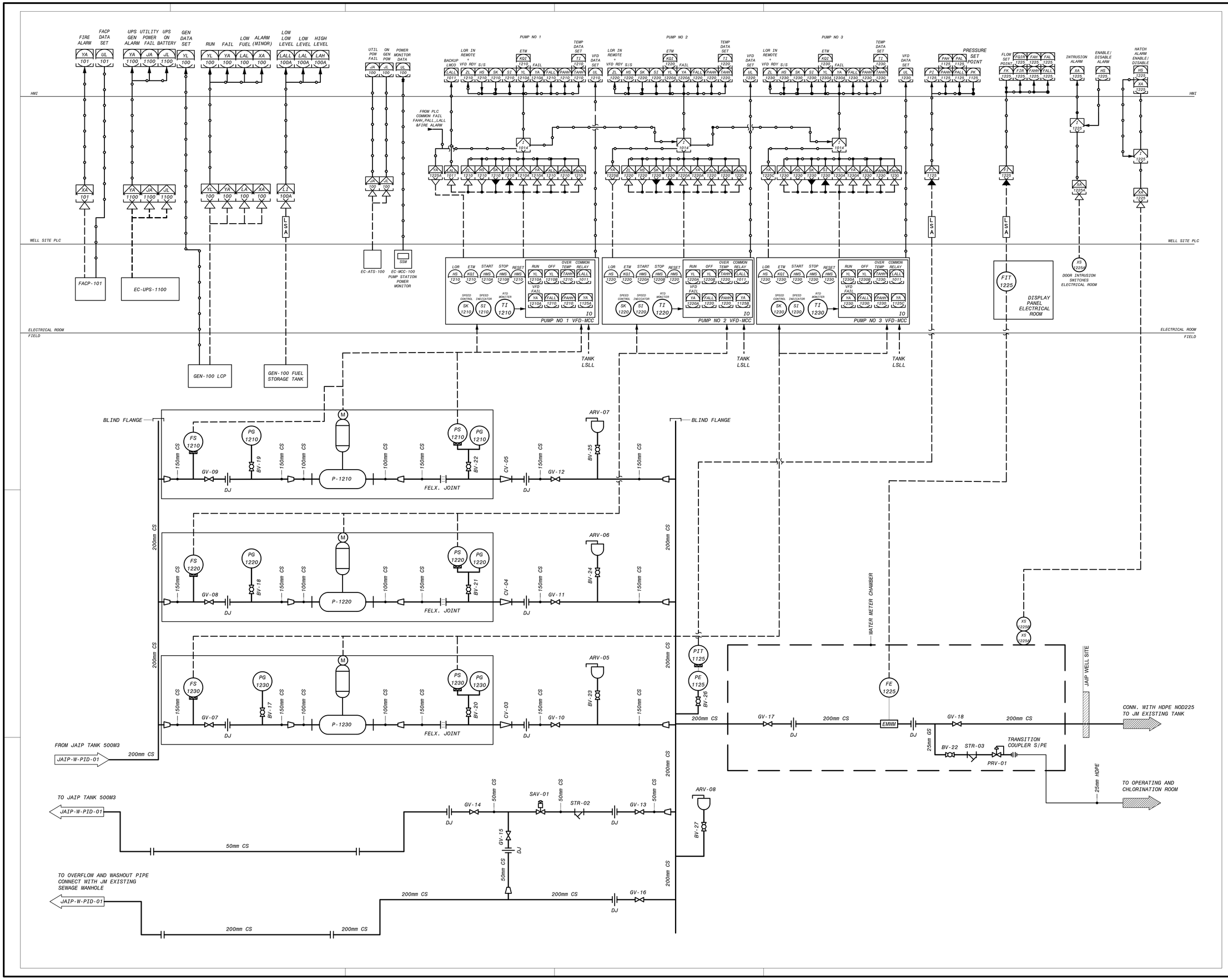

NOTES

NOTES

Rev.	Date	Description	Drawn	Checked	Approved
2	24.08.2021	Draft Detailed Design	BM	OB	BA
1	01.08.2021	Draft Detailed Design	BM	OB	BA

Project: Support to Infrastructure Works for Phase II: Jericho Agro-Industrial Park and Deep Water Well Drilling

Contract No.: .....

Subject: Detail Design

Construction of Deep Well and Transmission Pipeline for JAIP
Well Site
Instrumentation P & ID - II

Designed: Samed Burnat
Drawn: Bahaa Al Mur
Checked: Osama Bazzour
Approved: Bassam Abu Zahra
File Name: JAIP-WELL-PID.dwg
Date: 24-08-2021
Scale: N.T.S.
Size: A1
Drawing No.: JAIP- W- PID- 02
Sheet: 011/105
Rev.: 01

مركز الهندسة والتخطيط
center for engineering and planning

Center for Engineering and Planning
Ramallah - Palestine
Al Bireh - Al Medan St. Against Al Watanya Towers
P.O.Box 301

FINAL
2021-09-19

Donor: من الشعب الياباني
From the People of Japan

Owner: سلطة المياه الفلسطينية
PALESTINIAN WATER AUTHORITY

Operator: بلدية أريحا
Jericho Municipality

Implementing Agency: United Nations Development Programme
Programme of Assistance to the Palestinian People
برنامج الأمم المتحدة الإنمائي برنامج مساعدة الشعب الفلسطيني
UNDP

This document is the property of Center for Engineering and Planning (CEP), any duplication or transmition to third parties is forbidden without its prior approval.

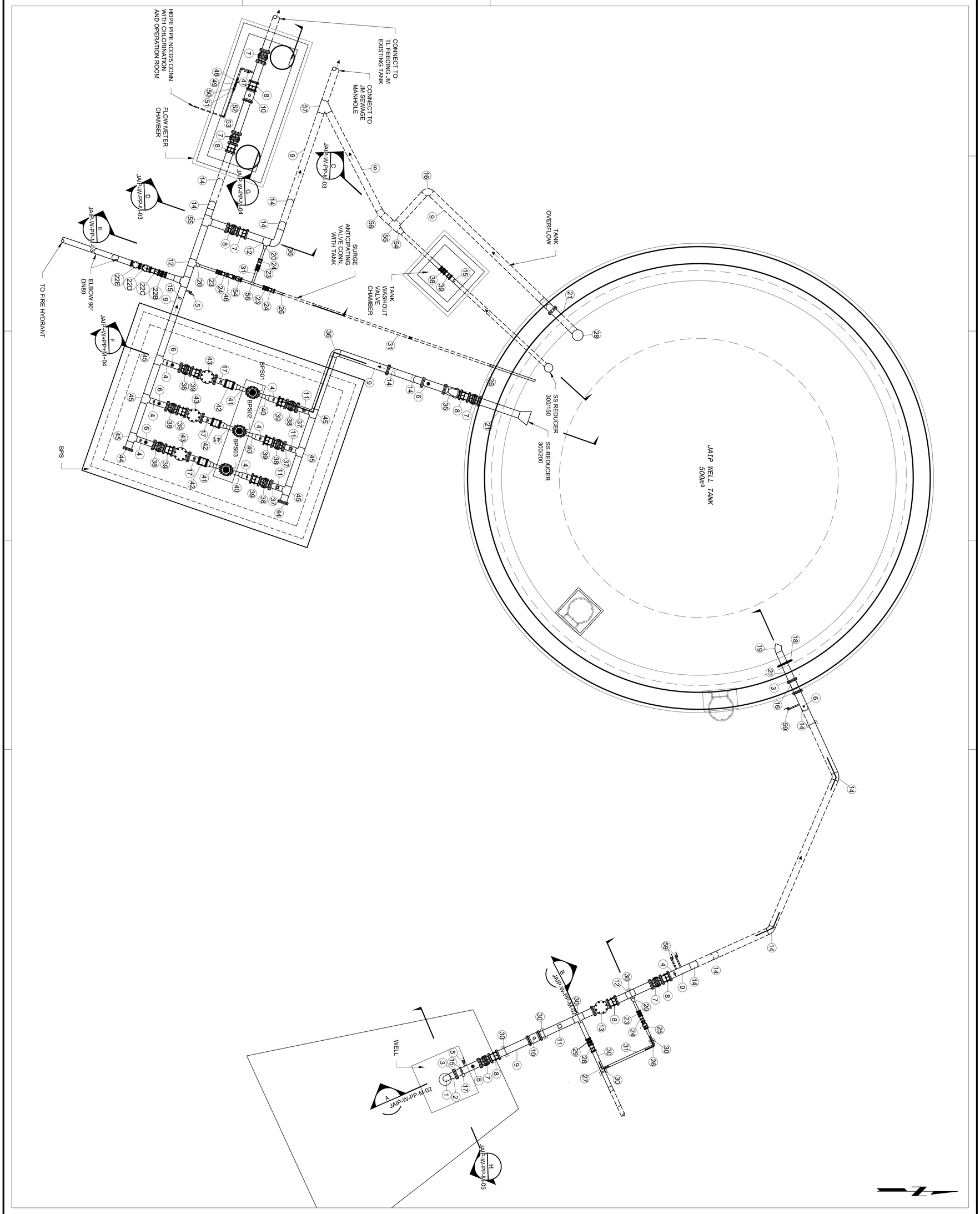

مركز الهندسة والتخطيط
center for engineering and planning

Center for Engineering and Planning
Ramallah, Palestine
Al Binah - Al Medan St. Against Al Wataniya Towers
P.O.Box 301

FINAL
2021-09-19

Designed:	Drawn:
Samed Burnat	Bahaa Al Mur
Checked:	Approved:
Osama Bazzour	Bassam Abu Zahra

File Name: JAIP-WELL-BPS.dwg

Date	Scale	Size
20-09-2021	1:50	A1

Drawing No.	Sheet	Rev.
JAIP- W- PP-M- 01	012/105	01

Donor: من الشعب الياباني From the People of Japan

Owner: سلطة المياه الفلسطينية PALESTINIAN WATER AUTHORITY

Operator: بلدية أريحا Jericho Municipality

Implementing Agency: United Nations Development Programme
Programme of Assistance to the Palestinian People
برنامج الأمم المتحدة الانمائي، برنامج مساعدة الشعب الفلسطيني

This document is the property of Center for Engineering and Planning (CEP) , any duplication or transmition to third parties is forbidden without its prior approval.

Rev.	Date	Description	Drawn	Checked	Approved
2	24.08.2021	Draft Detailed Design	BM	OB	BA
1	01.08.2021	Draft Detailed Design	BM	OB	BA

Project

Support to Infrastructure Works for Phase II:
Jericho Agro-Industrial Park and Deep Water Well Drilling

Contract No.: .....

Subject

Detail Design

Construction of Deep Well and Transmission Pipeline for JAIP
Well Site - Mechanical
Deep Well, Balancing Tank and Booster Station Piping Plan

NOTES

1. ALL DIMENSIONS IN MILLIMETERS UNLESS OTHERWISE NOTED.
2. ALL FITTINGS AND VALVE SHALL BE PN10 AS MINIMUM.

NO.	DESCRIPTION
1	CS ELBOW 90° DN150 (DISCHARGE HEAD)
2	WELDED CS REDUCER 200/150
3	FLANGED JOINT
4	PRESSURE GAUGE
5	BALL TAP VALVE DN25
6	COMBINATION AIR RELEASE VALVE DN50
7	GATE VALVE DN200
8	DISMANTLING JOINT DN200
9	CS PIPE DN200
10	EMVM DN200
11	ELECT. FLOW SWITCH
12	REDUCED TEE DN200/100
13	CHECK VALVE DN200
14	CS ELBOW 45°DN200
15	PRESSURE TRANSMITTER
16	CS ELBOW 90° DN200
17	PRESSURE SWITCH
18	PUDDLE FLANGE
19	SS ELBOW 45° DN200
20	WELDED REDUCER 100/50
21	S.S. WALL PIPE PIECE DN200
22	BALL VALVE DN50
22A	SS ELBOW DN150
22B	GATE VALVE DN80
22C	DISMANTLING JOINT DN80
22D	PRESSURE REDUCING VALVE DN80
22E	CHECK VALVE DN80

NOTES

23	GATE VALVE DN50
24	DISMANTLING JOINT DN50
25	PRESSURE RELIEF VALVE DN50
26	CS ELBOW 90° DN50
27	REDUCED TEE 100/50
28	DISMANTLING JOINT DN100
29	GATE VALVE DN100
30	JACK SUPPORT
31	STEEL PIPE DN50
32	SS ELBOW 45° DN50
33	SS WALL PIPE PIECE DN50
34	PIPE SUPPORT WITH WALL
35	STRAINER DN200
36	WELDED ELBOW 90° DN200
37	STEEL PIPE DN150
38	GATE VALVE DN150
39	DISMANTLING JOINT DN150
40	REDUCER 150/100 (OR TO FIT PUMP)
41	STEEL PIPE DN100 (OR TO FIT PUMP)
42	FLEXIBLE JOINT DN150 (RESTRAINED)
43	CHECK VALVE DN150
44	BLIND FLANGE
45	REDUCED TEE 200/150
46	STRAINER DN50
47	BALL VALVE DN25
48	STRAINER DN25
49	P.R.V. DN25
50	CHECK VALVE DN25
51	TRANS. COUPLER (S/HDPE) DN25
52	HDPE PIPE DN25
53	HDPE ELBOW 90° DN25
54	SURGE ANTICIPATING VALVE DN50
55	CS TEE DN200
56	CS ELBOW 22.5° DN200
57	CS Y DN200
58	TEE DN50
59	CHLORINE INJECTOR & ISOLATING VALVE ND8mm

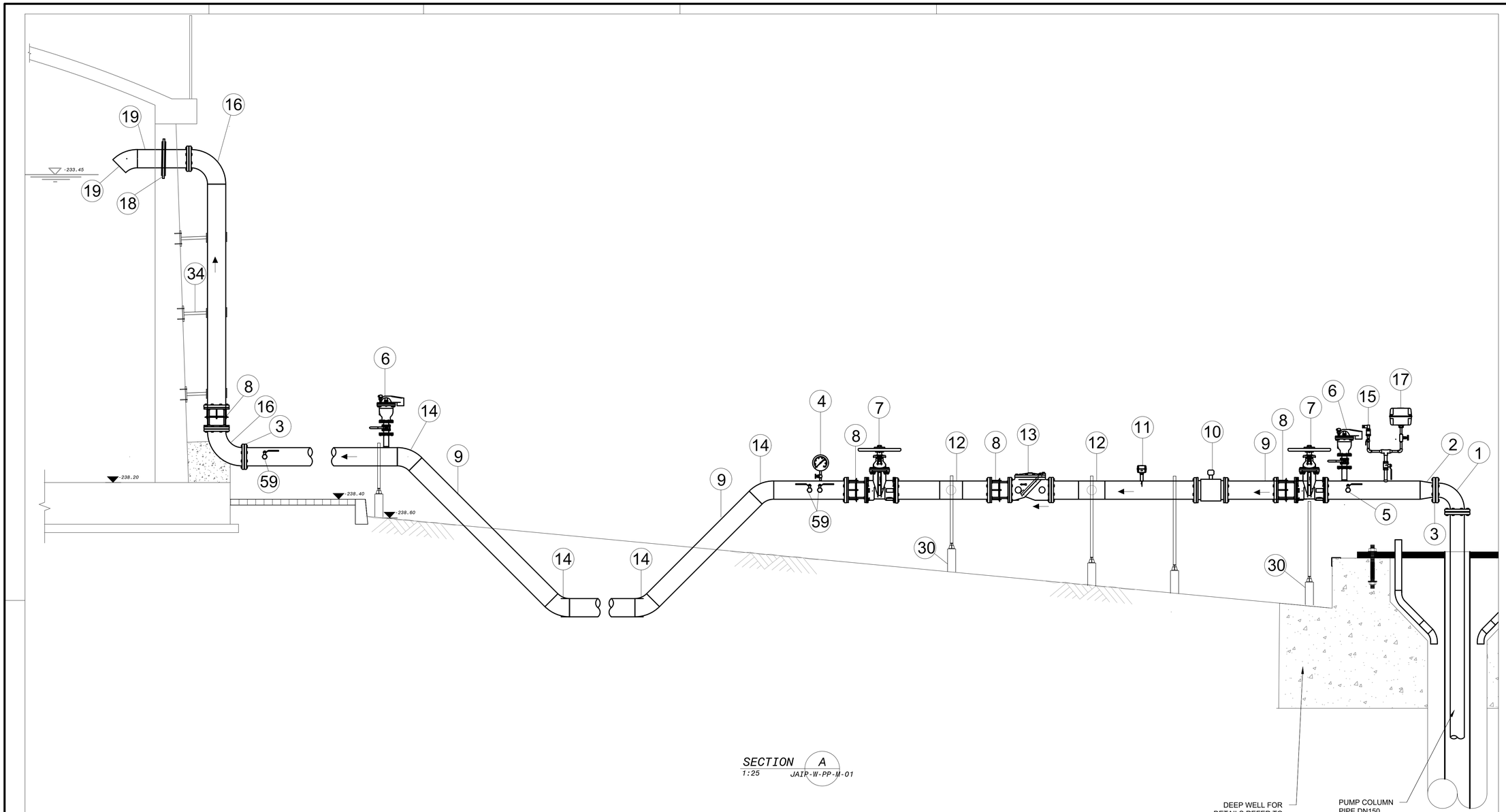

SECTION A
1:25 JAIP-W-PP-M-01

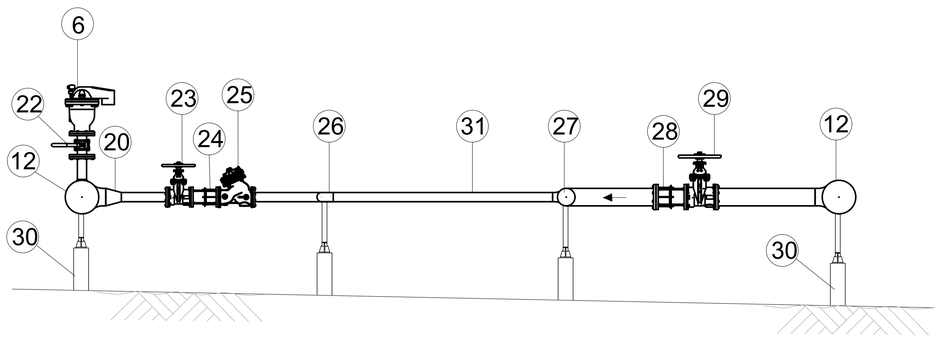

SECTION B
1:20 JAIP-W-PP-M-01

NOTES

1. ALL DIMENSIONS IN MILLIMETERS UNLESS OTHERWISE NOTED.
2. ALL FITTINGS AND VALVE SHALL BE PN16 AS MINIMUM.

NO	DESCRIPTION
1	CS ELBOW 90° DN150 (DISCHARGE HEAD)
2	WELDED CS REDUCER 200/150
3	FLANGED JOINT
4	PRESSURE GAUGE
5	BALL TAP VALVE DN25
6	COMBINATION AIR RELEASE VALVE DN50
7	GATE VALVE DN200
8	DISMANTLING JOINT DN200
9	CS PIPE DN200
10	EMWM DN200
11	ELECT. FLOW SWITCH
12	REDUCED TEE DN200/100
13	CHECK VALVE DN200
14	CS ELBOW 45°DN200
15	PRESSURE TRANSMITTER
16	CS ELBOW 90° DN200
17	PRESSURE SWITCH
18	PUDDLE FLANGE
19	SS ELBOW 45° DN200
20	WELDED REDUCER 100/50
21	S.S. WALL PIPE PIECE DN200
22	BALL VALVE DN50
22A	SS ELBOW DN150
22B	GATE VALVE DN80
22C	DISMANTLING JOINT DN80
22D	PRESSURE REDUCING VALVE DN80
22E	CHECK VALVE DN80

NOTES

NO	DESCRIPTION
23	GATE VALVE DN50
24	DISMANTLING JOINT DN50
25	PRESSURE RELIEF VALVE DN50
26	CS ELBOW 90° DN50
27	REDUCED TEE 100/50
28	DISMANTLING JOINT DN100
29	GATE VALVE DN100
30	JACK SUPPORT
31	STEEL PIPE DN50
32	SS ELBOW 45° DN50
33	SS WALL PIPE PIECE DN50
34	HDPE PIPE WITH WALL
35	STRAINER DN200
36	WELDED ELBOW 90° DN200
37	STEEL PIPE DN150
38	GATE VALVE DN150
39	DISMANTLING JOINT DN150
40	REDUCER 150/100 (OR TO FIT PUMP)
41	STEEL PIPE DN150 (OR TO FIT PUMP)
42	FLEXIBLE JOINT DN150 (RESTRAINED)
43	CHECK VALVE DN150
44	BLIND FLANGE
45	REDUCED TEE 200/150
46	STRAINER DN50
47	BALL VALVE DN25
48	STRAINER DN25
49	P.R.V. DN25
50	CHECK VALVE DN25
51	TRANSITION PIECE (SS/HDPE) DN25
52	HDPE PIPE DN25
53	HDPE ELBOW 90° DN25
54	SURGE ANTICIPATING VALVE DN50
55	CS TEE DN200
56	CS ELBOW 22.5° DN200
57	CS Y DN200
58	TEE DN50
59	CHLORINE INJECTOR & ISOLATING VALVE N28mm

Rev.	Date	Description	Drawn	Checked	Approved
2	24.08.2021	Draft Detailed Design	BM	OB	BA
1	01.08.2021	Draft Detailed Design	BM	OB	BA

Project: Support to Infrastructure Works for Phase II: Jericho Agro-Industrial Park and Deep Water Well Drilling

Contract No.: .....

Subject: Detail Design

Construction of Deep Well and Transmission Pipeline for JAIP
Well Site - Mechanical
Piping Section Details - I

Designed: Samed Burnat
Drawn: Bahaa Al Mur
Checked: Osama Bazzour
Approved: Bassam Abu Zahra

File Name: JAIP-WELL-BPS.dwg
Date: 20-09-2021
Scale: N.T.S.
Size: A1
Drawing No.: JAIP- W- PP-M- 02
Sheet: 013/105
Rev.: 01

FINAL
2021-09-19

مركز الهندسة والتخطيط
center for engineering and planning
Center for Engineering and Planning
Ramallah - Palestine
Al Bireh - Al Medan St. Against Al Watanya Towers
P.O.Box 301

Donor: من الشعب الياباني From the People of Japan

Owner: سلطة المياه الفلسطينية Palestinian water authority

Operator: بلدية أريحا Jericho Municipality

Implementing Agency: United Nations Development Programme
Programme of Assistance to the Palestinian People
برنامج الأمم المتحدة الإنمائي برنامج مساعدة الشعب الفلسطيني

This document is the property of Center for Engineering and Planning (CEP), any duplication or transmition to third parties is forbidden without its prior approval.

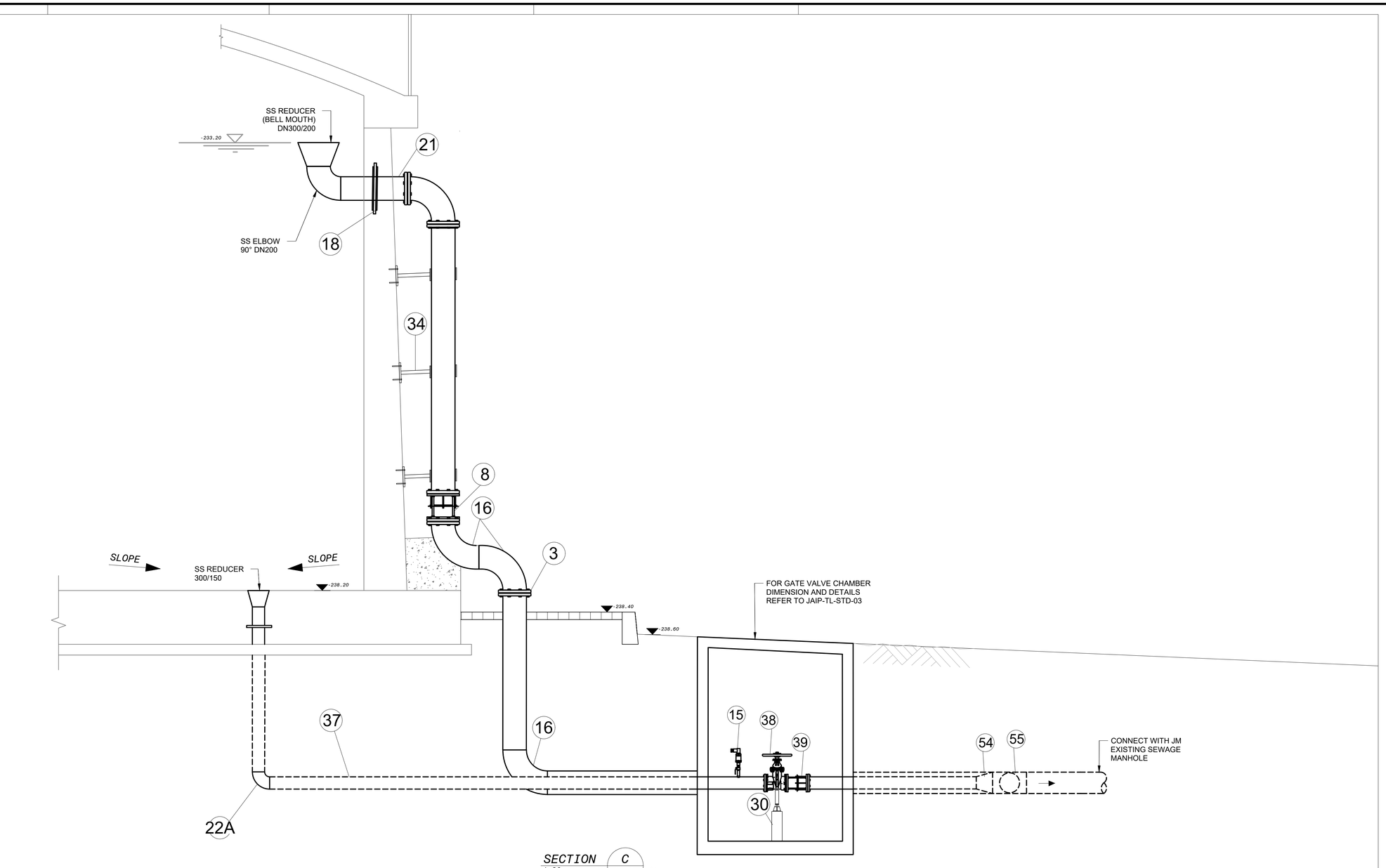

SECTION C
1:20 JAIP-W-PP-M-01

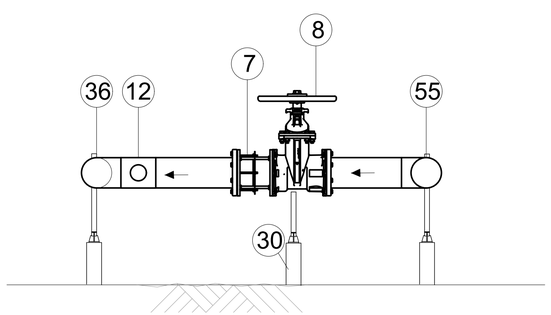

SECTION D
1:20 JAIP-W-PP-M-01

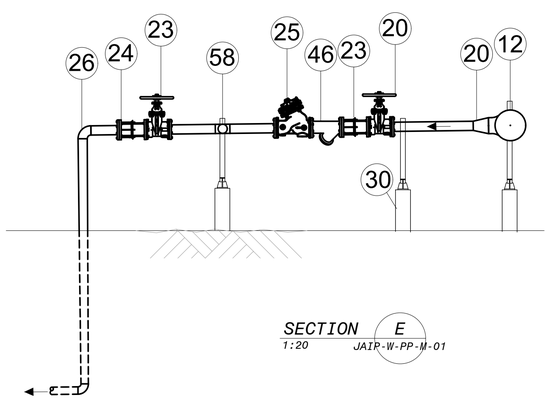

SECTION E
1:20 JAIP-W-PP-M-01

NOTES

1. ALL DIMENSIONS IN MILLIMETERS UNLESS OTHERWISE NOTED.
2. ALL FITTINGS AND VALVE SHALL BE PN16 AS MINIMUM.

NO	DESCRIPTION
1	CS ELBOW 90° DN150 (DISCHARGE HEADER)
2	WELDED CS REDUCER 200/150
3	FLANGED JOINT
4	PRESSURE GAUGE
5	BALL TAP VALVE DN25
6	COMBINATION AIR RELEASE VALVE DN50
7	GATE VALVE DN200
8	DISMANTLING JOINT DN200
9	CS PIPE DN200
10	EMWM DN200
11	ELECT. FLOW SWITCH
12	REDUCED TEE DN200/100
13	CHECK VALVE DN200
14	CS ELBOW 45°DN200
15	PRESSURE TRANSMITTER
16	CS ELBOW 90° DN200
17	PRESSURE SWITCH
18	PUDDLE FLANGE
19	SS ELBOW 45° DN200
20	WELDED REDUCER 100/50
21	S.S. WALL PIPE PIECE DN200
22	BALL VALVE DN50
22A	SS ELBOW DN150
22B	GATE VALVE DN80
22C	DISMANTLING JOINT DN80
22D	PRESSURE REDUCING VALVE DN80
22E	CHECK VALVE DN80

NOTES

NO	DESCRIPTION
23	GATE VALVE DN50
24	DISMANTLING JOINT DN50
25	PRESSURE RELIEF VALVE DN50
26	CS ELBOW 90° DN50
27	REDUCED TEE 100/50
28	DISMANTLING JOINT DN100
29	GATE VALVE DN100
30	JACK SUPPORT
31	STEEL PIPE DN50
32	SS ELBOW 45° DN50
33	SS WALL PIPE PIECE DN50
34	PIPE SUPPORT WITH WALL
35	STRAINER DN200
36	WELDED ELBOW 90° DN200
37	STEEL PIPE DN150
38	GATE VALVE DN150
39	DISMANTLING JOINT DN150
40	REDUCER 150/100 (OR TO FIT PUMP)
41	STEEL PIPE DN150 (OR TO FIT PUMP)
42	FLEXIBLE JOINT DN150 (RESTRAINED)
43	CHECK VALVE DN150
44	BLIND FLANGE
45	REDUCED TEE 200/150
46	STRAINER DN50
47	BALL VALVE DN25
48	STRAINER DN25
49	P.R.V. DN25
50	CHECK VALVE DN25
51	THREE WAY COCK (SHAPE) DN25
52	HDPE PIPE DN25
53	HDPE ELBOW 90° DN25
54	SURGE ANTICIPATING VALVE DN50
55	CS TEE DN200
56	CS ELBOW 22.5° DN200
57	CS Y DN200
58	TEE DN50
59	CHLORINE INJECTOR & ISOLATING VALVE N26mm

Rev.	Date	Description	Drawn	Checked	Approved
2	24.08.2021	Draft Detailed Design	BM	OB	BA
1	01.08.2021	Draft Detailed Design	BM	OB	BA

Project: Support to Infrastructure Works for Phase II: Jericho Agro-Industrial Park and Deep Water Well Drilling

Contract No.: .....

Subject: Detail Design

Construction of Deep Well and Transmission Pipeline for JAIP
Well Site - Mechanical
Piping Section Details - II

Designed: Samed Burnat
Drawn: Bahaa Al Mur
Checked: Osama Bazzour
Approved: Bassam Abu Zahra
File Name: JAIP-WELL-BPS.dwg
Date: 20-09-2021
Scale: N.T.S.
Size: A1
Drawing No.: JAIP- W- PP-M- 03
Sheet: 014/105
Rev.: 01

مركز الهندسة والتخطيط
center for engineering and planning

Center for Engineering and Planning
Ramallah - Palestine
Al Birah - Al Medan St. Against Al Watanya Towers
P.O.Box 381

FINAL
2021-09-19

Donor: من الشعب الياباني
From the People of Japan

Owner: سلطة المياه الفلسطينية
PALESTINIAN WATER AUTHORITY

Operator: بلدية أريحا
Jericho Municipality

Implementing Agency: United Nations Development Programme
Programme of Assistance to the Palestinian People
برنامج الأمم المتحدة الإنمائي برنامج مساعدة شعب فلسطين

This document is the property of Center for Engineering and Planning (CEP) , any duplication or transmitted to third parties is forbidden without its prior approval.

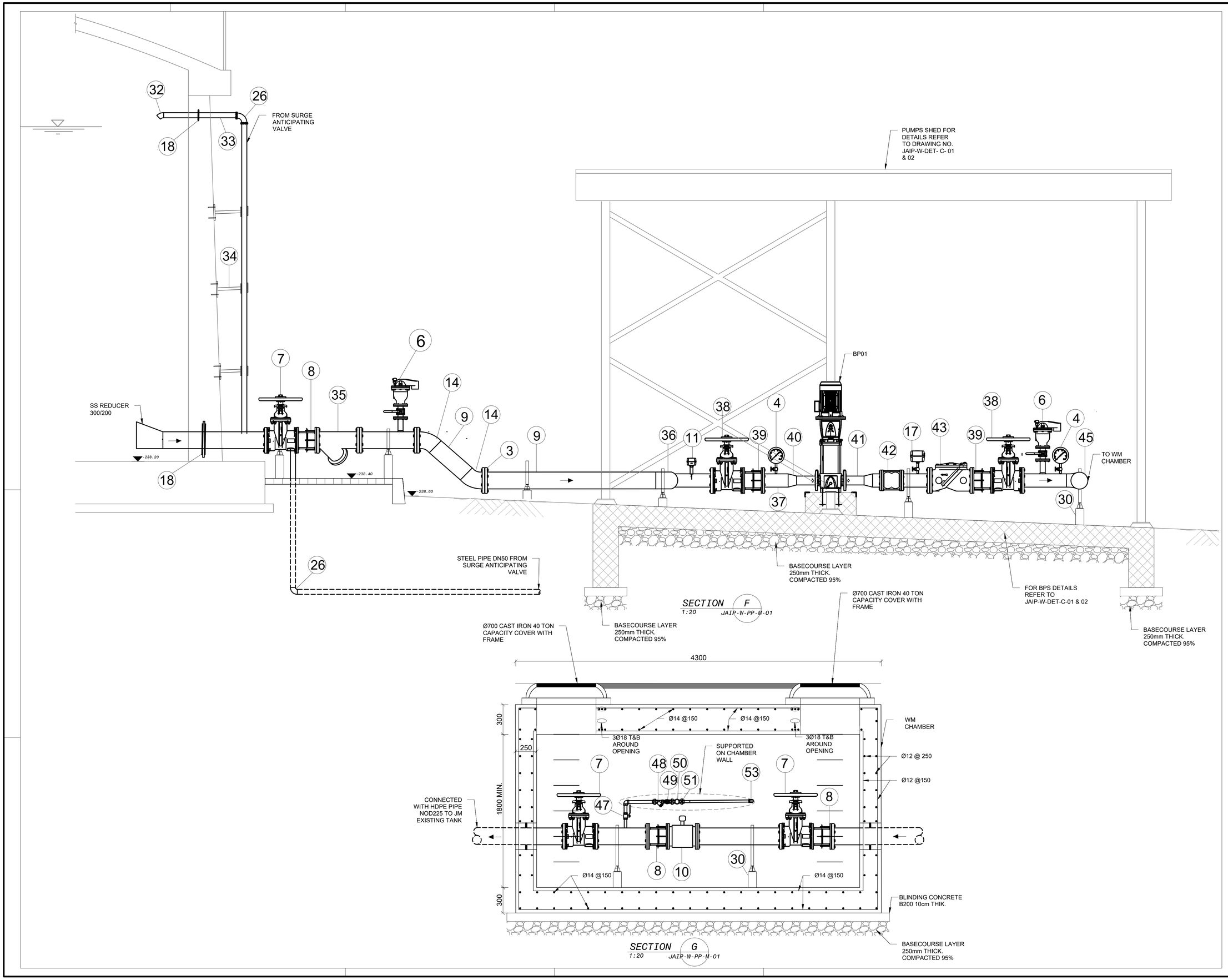

NOTES

1. ALL DIMENSIONS IN MILLIMETERS UNLESS OTHERWISE NOTED.
2. ALL FITTINGS AND VALVE SHALL BE PN16 AS MINIMUM.

NO	DESCRIPTION	Drawn	Checked	Approved
13	CHECK VALVE DN200			
14	CS ELBOW 45°DN200			
15	PRESSURE TRANSMITTER			
16	CS ELBOW 90° DN200			
17	PRESSURE SWITCH			
18	PUDDLE FLANGE			
19	SS ELBOW 45° DN200			
20	WELDED REDUCER 100/50			
21	S.S. WALL PIPE PIECE DN200			
22	BALL VALVE DN50			
22A	SS ELBOW DN150			
22B	GATE VALVE DN80			
22C	DISMANTLING JOINT DN80			
22D	PRESSURE REDUCING VALVE DN80			
22E	CHECK VALVE DN80			
23	GATE VALVE DN50			
24	DISMANTLING JOINT DN50			
25	PRESSURE RELIEF VALVE DN50			
26	CS ELBOW 90° DN50	BM	OB	BA
27	REDUCED TEE 100/50	BM	OB	BA
28	DISMANTLING JOINT DN100			
29	GATE VALVE DN100			
30	JACK SUPPORT			
31	STEEL PIPE DN50			
32	SS ELBOW 45° DN50			
33	SS WALL PIPE PIECE DN50			
34	PIPE SUPPORT WITH WALL			
35	STRAINER DN200			
36	WELDED ELBOW 90° DN200			
37	STEEL PIPE DN150			
38	GATE VALVE DN150			
39	DISMANTLING JOINT DN150			
40	REDUCER 150/100 (OR TO FIT PUMP)			
41	STEEL PIPE DN150 (OR TO FIT PUMP)			
42	FLEXIBLE JOINT DN150 (RESTRAINED)			
43	CHECK VALVE DN150			
44	BLIND FLANGE			
45	REDUCED TEE 200/150			
46	STRAINER DN50			
47	BALL VALVE DN25			
48	STRAINER DN25			
49	P.R.V. DN25			
50	CHECK VALVE DN25			
51	THREE WAY COCK (SHOPE) DN25			
53	HDPE PIPE DN25			
54	SURGE ANTICIPATING VALVE DN50			
55	CS TEE DN200			
56	CS ELBOW 22.5° DN200			
57	CS Y DN200			
58	TEE DN50			
59	CHLORINE INJECTOR & ISOLATING VALVE N08mm			

Rev.	Date	Description
2	24.08.2021	Draft Detailed Design
1	01.08.2021	Draft Detailed Design

Project: Support to Infrastructure Works for Phase II: Jericho Agro-Industrial Park and Deep Water Well Drilling

Contract No.: .....

Subject: Detail Design

Construction of Deep Well and Transmission Pipeline for JAIP
Well Site - Mechanical
Piping Section Details - III

Designed: Samed Burnat
Drawn: Bahaa Al Mur
Checked: Osama Bazzour
Approved: Bassam Abu Zahra

File Name: JAIP-WELL-BPS.dwg
Date: 20-09-2021
Scale: N.T.S.
Size: A1
Drawing No.: JAIP- W- PP-M- 04
Sheet: 015/105
Rev.: 01

مركز الهندسة والتخطيط
center for engineering and planning

Center for Engineering and Planning
Ramallah, Palestine
Al Bireh - Al Medan St. Against Al Watanya Towers
P.O.Box 301

F I N A L
2021-09-19

Donor: من الشعب الياباني
From the People of Japan

Owner: سلطة المياه الفلسطينية
PALESTINIAN WATER AUTHORITY

Operator: بلدية أريحا
Jericho Municipality

Implementing Agency: United Nations Development Programme
Programme of Assistance to the Palestinian People
برنامج الأمم المتحدة الإنمائي برنامج مساعدة الشعب الفلسطيني

This document is the property of Center for Engineering and Planning (CEP), any duplication or transmition to third parties is forbidden without its prior approval.

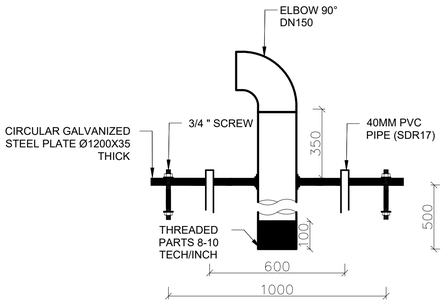

DISCHARGE HEAD FOR SUBMERSIBLE PUMP
N.T.S.

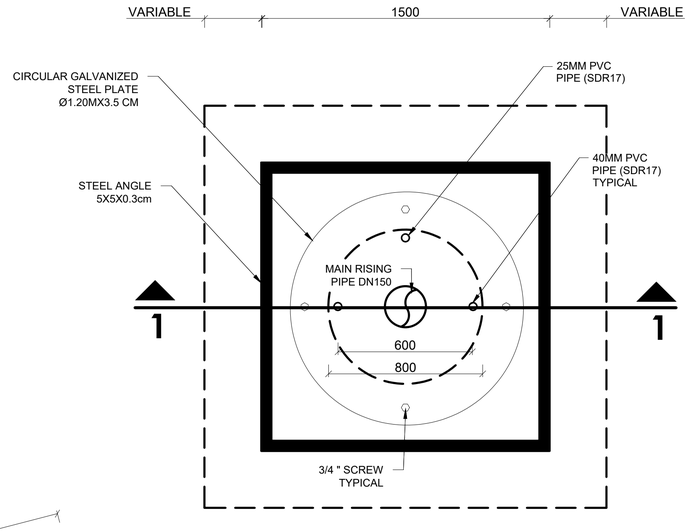

WELL PUMP SETTING PLAN
N.T.S.

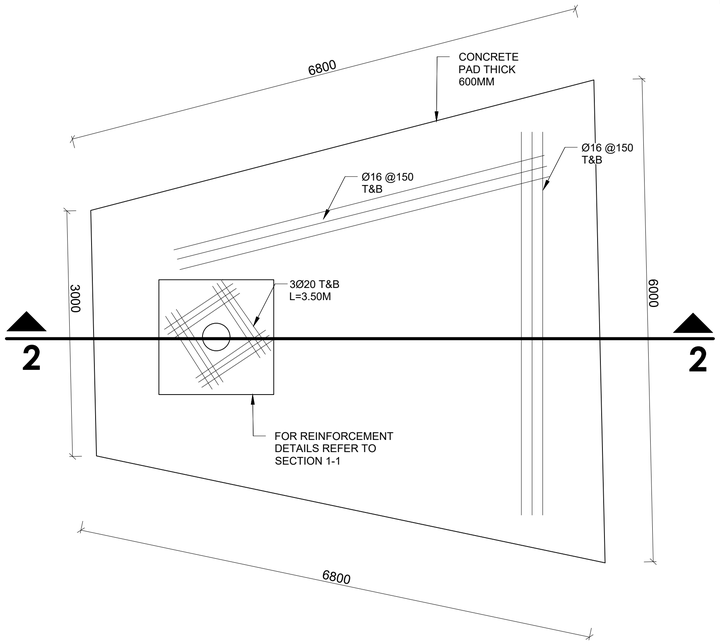

WELL CONCRETE PAD FOUNDATION
N.T.S.

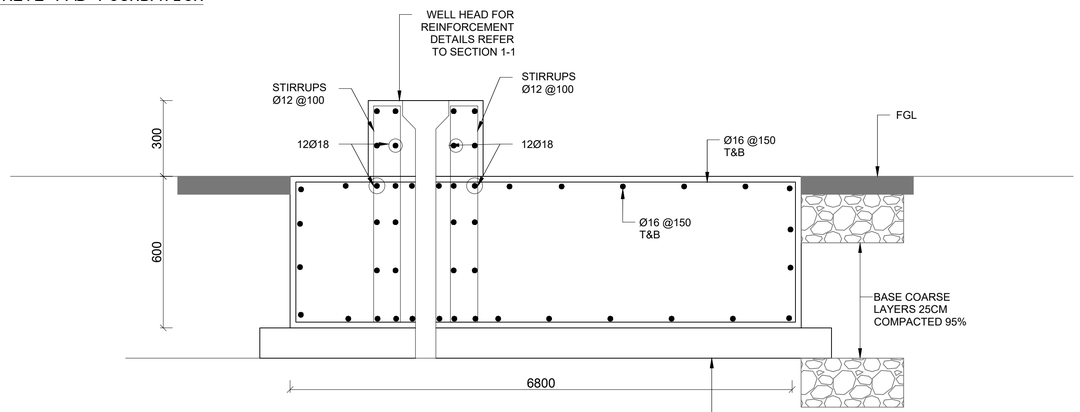

SECTION 2-2
N.T.S.

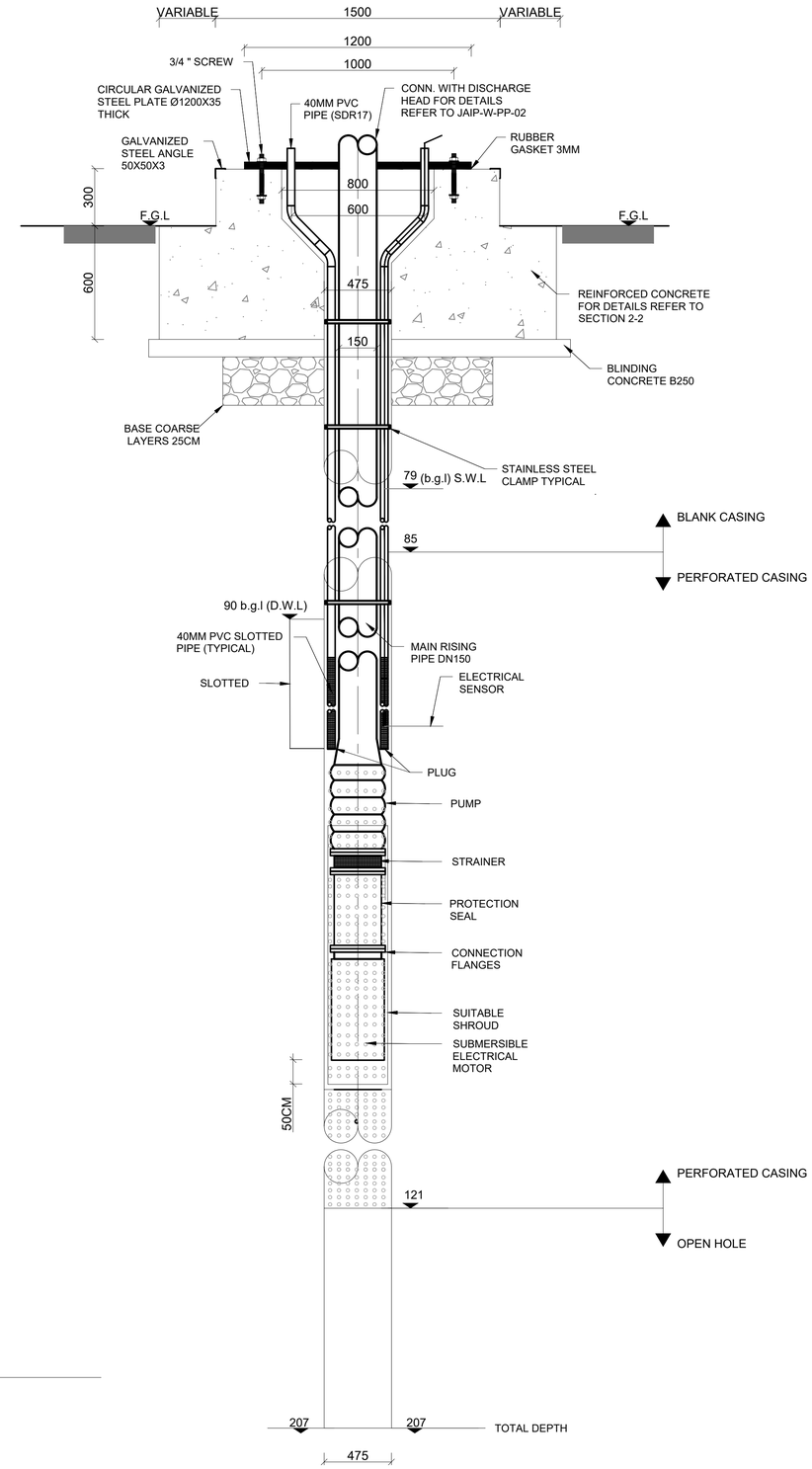

SECTION 1-1
N.T.S.

NOTES

1. ALL DIMENSIONS IN MILLIMETERS UNLESS OTHERWISE NOTED.
2. ALTERNATIVES TO ALL PROPRIETY EQUIPMENT SHALL BE SUBMITTED FOR APPROVAL.
3. ALL PROPRIETARY EQUIPMENT SHALL BE INSTALLED IN ACCORDANCE WITH MANUFACTURER'S INSTRUCTIONS.
4. THE CONCRETE COVER SHALL BE ACCORDING TO THE ACI CODE AND SPECIFICATION.
5. ALL METAL WORKS SHALL BE GALVANIZED STEEL

S.W.L: STATIC WATER LEVEL
S.W.L: DYNAMIC WATER LEVEL
b.g.l: BELOW GROUND LEVEL
F.G.L.: FINISH GROUND LEVEL.

Rev.	Date	Description	Drawn	Checked	Approved
2	24.08.2021	Draft Detailed Design	BM	OB	BA
1	01.08.2021	Draft Detailed Design	BM	OB	BA

Project: Support to Infrastructure Works for Phase II:
Jericho Agro-Industrial Park and Deep Water Well Drilling
Contract No: .....

Subject: Detail Design
Construction of Deep Well and Transmission Pipeline for JAIP
Well Site - Mechanical
Well Section Details and Reinforcement

Designed: Samed Burnat
Drawn: Bahaa Al Mur
Checked: Osama Bazzour
Approved: Bassam Abu Zahra
File Name: JAIP-WELL-BPS.dwg
Date: 20-09-2021
Scale: N.T.S.
Size: A1
Drawing No.: JAIP- W- PP-M- 05
Sheet: 016/105
Rev.: 01

مركز الهندسة والتخطيط
center for engineering and planning
Center for Engineering and Planning
Ramallah, Palestine
Al Bireh - Al Medan St. Against Al Waleriya Towers
P.O.Box 301

FINAL
2021-09-19

Implementing Agency:
United Nations Development Programme
Programme of Assistance to the Palestinian People
برنامج الأمم المتحدة الإنمائي برنامج مساعدة الشعب الفلسطيني
UNDP

Operator:
Jericho Municipality
بلدية أريحا

Owner:
سلطة المياه الفلسطينية
PALESTINIAN WATER AUTHORITY

Donor:
شعب اليابان
From the People of Japan

This document is the property of Center for Engineering and Planning (CEP) , any duplication or transmition to third parties is forbidden without its prior approval.

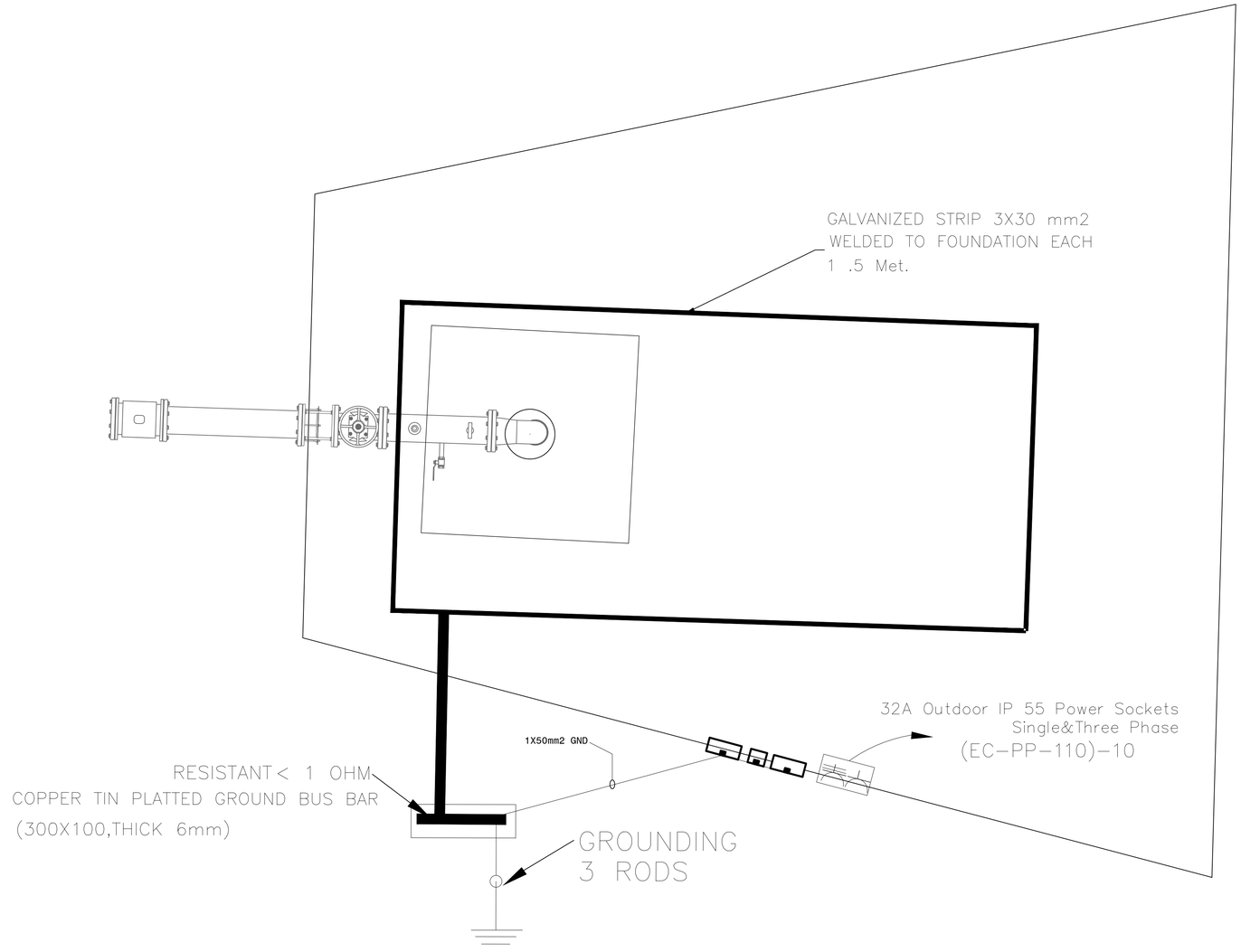

Earthing and Receptacles Plan

SCALE: 1:50

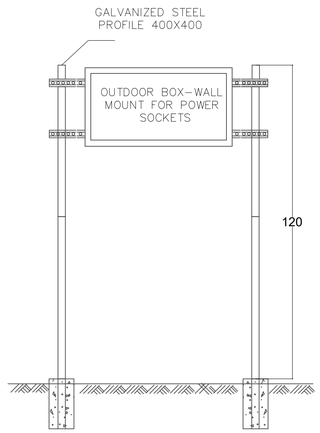

POWER SOCKET BOX MOUNTING

SCALE: N.T.S

NOTES

1. ALL DIMENSIONS ARE IN METERS UNLESS OTHERWISE NOTED.
2. COORDINATES ARE SHOWN IN THE 1923 PALESTINIAN GRID SYSTEM.
3. CONTRACTOR SHALL COORDINATE WITH JERICHO MUSICALITY AND SITE ENGINEER BEFORE START OF WORKS.
4. MH: SEWAGE MANHOLE.
   JM: JERICHO MUNICIPALITY.

Rev.	Date	Description	Drawn	Checked	Approved
2	24.08.2021	Draft Detailed Design	AJ	OB	BA
1	01.08.2021	Draft Detailed Design	AJ	OB	BA

Project: Support to Infrastructure Works for Phase II:
Jericho Agro-Industrial Park and Deep Water Well Drilling

Contract No.: .....

Subject: Detail Design

Construction of Deep Well and Transmission Pipeline for JAIP
Well Site - Electrical
Well Pump Earthing and Receptacles Plan

Designed: A.Jamal
Drawn: A.Jamal
Checked: Osama Bazzour
Approved: Bassam Abu Zahra
File Name: JAIP-WELL-WPS-E.dwg
Date: 24-08-2021
Scale: 1: 50
Size: A1
Drawing No.: JAIP-W-SITE-E-06
Sheet: 017/105
Rev.: 01

مركز الهندسة والتخطيط
center for engineering and planning

Center for Engineering and Planning
Ramallah, Palestine
Al Bireh - Al Medan St. Against Al Watanya Towers
P.O.Box 301

FINAL
2021-09-19

Implementing Agency:
United Nations Development Programme
Programme of Assistance to the Palestinian People
برنامج الأمم المتحدة الإنمائي برنامج مساعدة الشعب الفلسطيني

Operator:
بلدية أريحا
Jericho Municipality

Owner:
سلطة المياه الفلسطينية
PALESTINIAN WATER AUTHORITY

Donor:
من الشعب الياباني
From the People of Japan

This document is the property of Center for Engineering and Planning (CEP) , any duplication or transmition to third parties is forbidden without its prior approval.

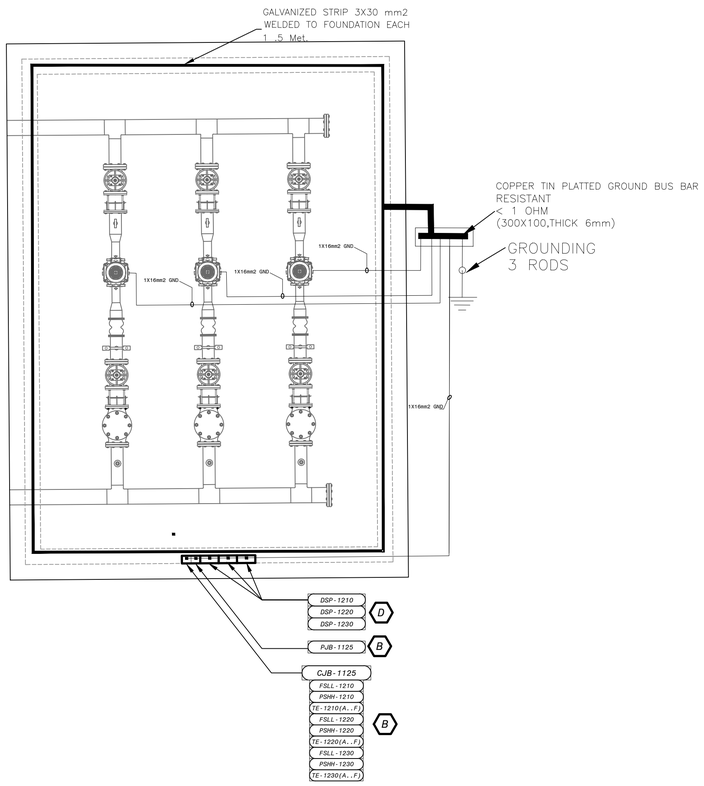

Earthing System

SCALE: 1:25

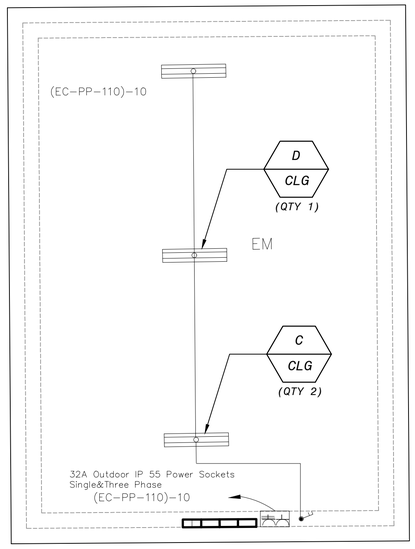

Lighting and Receptacles Plan

SCALE: 1:25

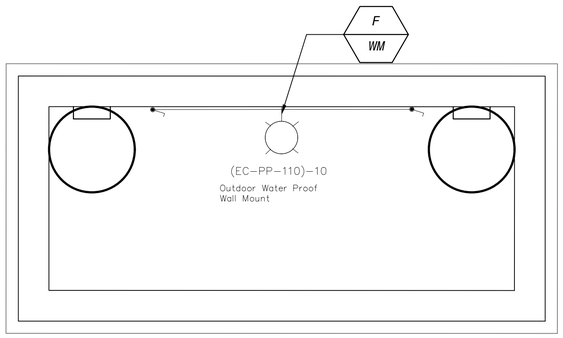

FM Chamber Lighting Plan

SCALE: 1:25

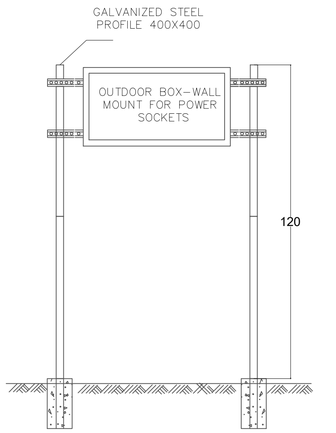

POWER SOCKET BOX MOUNTING

SCALE: N.T.S

NOTES

1. ALL DIMENSIONS ARE IN METERS UNLESS OTHERWISE NOTED.
2. COORDINATES ARE SHOWN IN THE 1923 PALESTINIAN GRID SYSTEM.
3. CONTRACTOR SHALL COORDINATE WITH JERICHO MUSICALITY AND SITE ENGINEER BEFORE START OF WORKS.
4. MH: SEWAGE MANHOLE.
   JM: JERICHO MUNICIPALITY.

Rev.	Date	Description	Drawn	Checked	Approved
2	24.08.2021	Draft Detailed Design	AJ	OB	BA
1	01.08.2021	Draft Detailed Design	AJ	OB	BA

Project: Support to Infrastructure Works for Phase II: Jericho Agro-Industrial Park and Deep Water Well Drilling

Contract No.: .....

Subject: Detail Design

Construction of Deep Well and Transmission Pipeline for JAIP
Well Site - Electrical
BPS & FMC Earthing, Lighting and Receptacles Plan

Designed: A.Jamal
Drawn: A.Jamal
Checked: Osama Bazzour
Approved: Bassam Abu Zahra
File Name: JAIP-WELL-BPS-E.dwg
Date: 24-08-2021
Scale: 1: 25
Size: A1
Drawing No.: JAIP-W-SITE-E-18
Sheet: 018/105
Rev.: 00

مركز الهندسة والتخطيط
center for engineering and planning

Center for Engineering and Planning
Ramallah, Palestine
Al Bireh - Al Medan St. Against Al Watanya Towers
P.O.Box 301

FINAL
2021-09-19

Implementing Agency: United Nations Development Programme
Programme of Assistance to the Palestinian People
برنامج الأمم المتحدة الإنمائي برنامج مساعدة الشعب الفلسطيني

Operator: بلدية أريحا Jericho Municipality

Owner: سلطة المياه الفلسطينية PALESTINIAN WATER AUTHORITY

Donor: من الشعب الياباني From the People of Japan

This document is the property of Center for Engineering and Planning (CEP), - any duplication or transmission to third parties is forbidden without its prior approval.

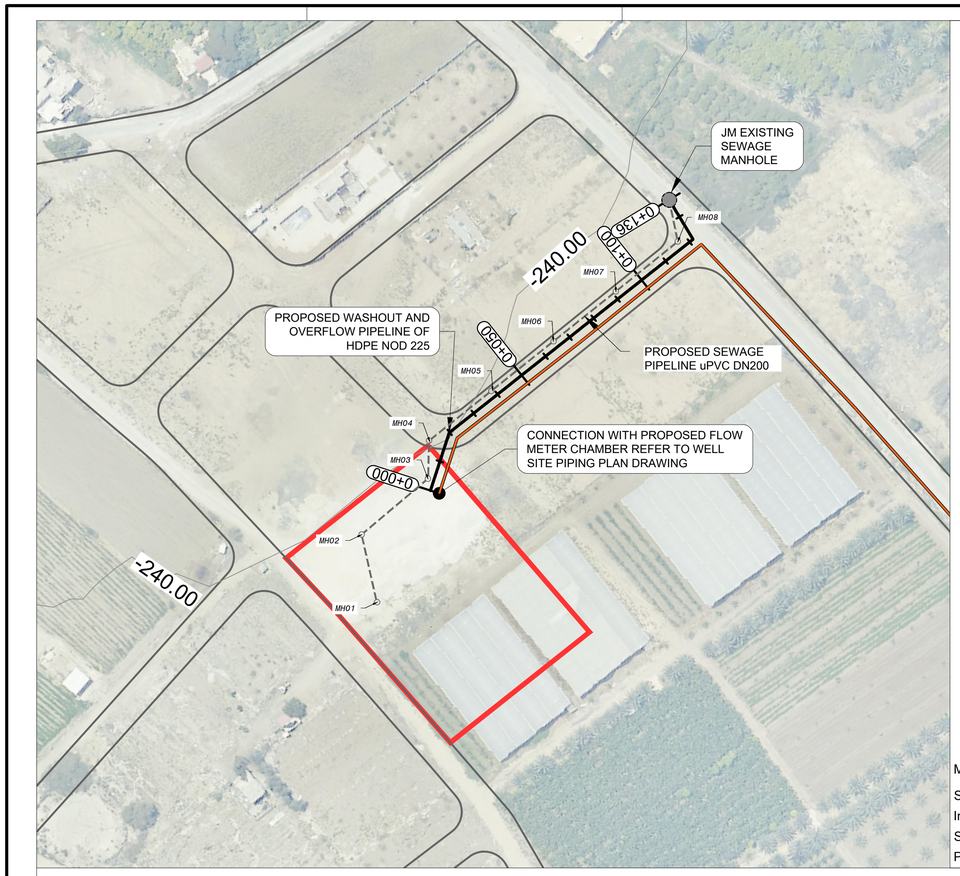

Proposed Sewage Pipeline DN160 & 200 Connecting with JM Existing Manhole

MH No.	MH01	MH02	MH03	MH04	MH05	MH06	MH07	MH08	Existing MH
Station (m)	0+000	0+022	0+050	0+062	0+088	0+114	0+140	0+166	0+180
Invert Depth (m)	0.60	0.82	1.10	1.22	1.35	1.48	1.61	1.74	1.81
Slope (%)	-	1.00%	1.00%	1.00%	0.50%	0.50%	0.50%	0.50%	0.50%
Pipe DIA (mm)	160	160	160	160	200	200	200	200	200

0 GRAPHIC SCALE 5m
* IF PRINTING ON A1- 1:100
* IF PRINTING ON A3- 1:200

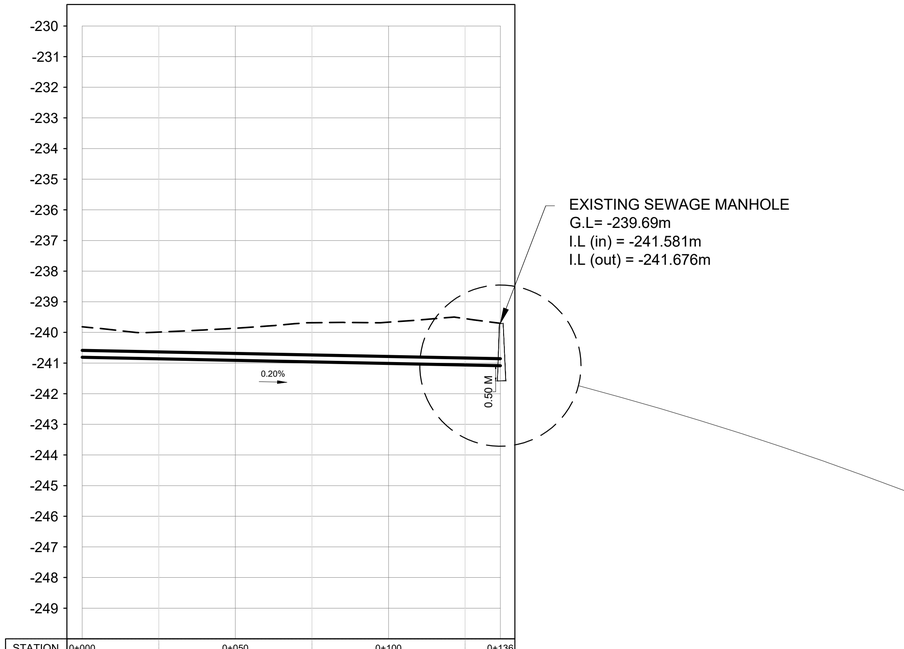

STATION	0+000		0+050		0+100		0+136
GR. LEVEL	-239.82	-239.99	-239.86	-239.68	-239.67	-239.55	-239.70
IN. LEVEL	-240.59	-240.64	-240.69	-240.74	-240.79	-240.84	-240.86
MATERIAL PIPE DIA.	HDPE PIPE, NOD 225 MM						
COVER(M)	0.99		1.05		1.35		1.38
FITTINGS, VALVES							

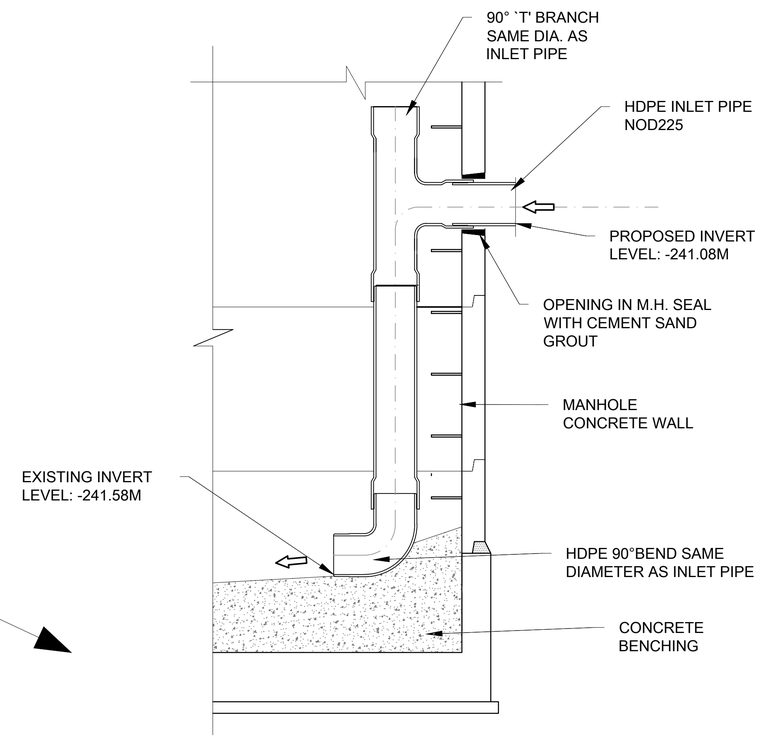

CONNECTION DETAIL WITH EXISTING SEWAGE MANHOLE

N.T.S.

NOTES

1. ALL DIMENSIONS ARE IN METERS UNLESS OTHERWISE NOTED.
2. EXACT LOCATION OF CHAMBERS SHOULD BE APPROVED BY THE SITE ENGINEER.
3. CONTRACTOR SHALL COORDINATE WITH JERICHO MUNICIPALITY AND SITE ENGINEER.

LEGENDS

- PROPOSED WASHOUT AND OVERFLOW PIPELINE CONNECTED WITH EXISTING MH
- PROPOSED TRANSMISSION PIPELINE HDPE NOD 225 FROM JAIP WELL TO JM EXISTING TANK
- PROPOSED SEWAGE PIPELINE uPVC DN160 & 200
- JAIP WELL SITE BOUNDARY
- JM EXISTING SEWAGE MANHOLE

Rev.	Date	Description	Drawn	Checked	Approved
2	24.08.2021	Draft Detailed Design	BM	OB	BA
1	01.08.2021	Draft Detailed Design	BM	OB	BA

Project: Support to Infrastructure Works for Phase II: Jericho Agro-Industrial Park and Deep Water Well Drilling

Contract No. .....

Subject: Detail Design

Construction of Deep Well and Transmission Pipeline for JAIP Well Site - Civil

Plan & Profile of OverFlow & Washout Pipeline, Details of Sewer Pipe

Designed: Samed Burnat
Drawn: Bahaa Al Mur
Checked: Osama Bazzour
Approved: Bassam Abu Zahra
File Name: JAIP-WELL-P&P.dwg
Date: 24-08-2021
Scale: 1: 100
Size: A1
Drawing No.: JAIP-W-PP-C-08
Sheet: 019/105
Rev.: 01

مركز الهندسة والتخطيط
center for engineering and planning

Center for Engineering and Planning
Ramallah - Palestine
Al Bireh - Al Medan St. Against Al Watanya Towers
P.O.Box 301

FINAL
2021-09-19

Donor: من الشعب الياباني From the People of Japan

Owner: سلطة المياه الفلسطينية PALESTINIAN WATER AUTHORITY

Operator: بلدية أريحا Jericho Municipality

Implementing Agency: United Nations Development Programme
Programme of Assistance to the Palestinian People
برنامج الأمم المتحدة الإنمائي برنامج مساعدة الشعب الفلسطيني

This document is the property of Center for Engineering and Planning (CEP), - any duplication or transmition to third parties is forbidden without its prior approval.

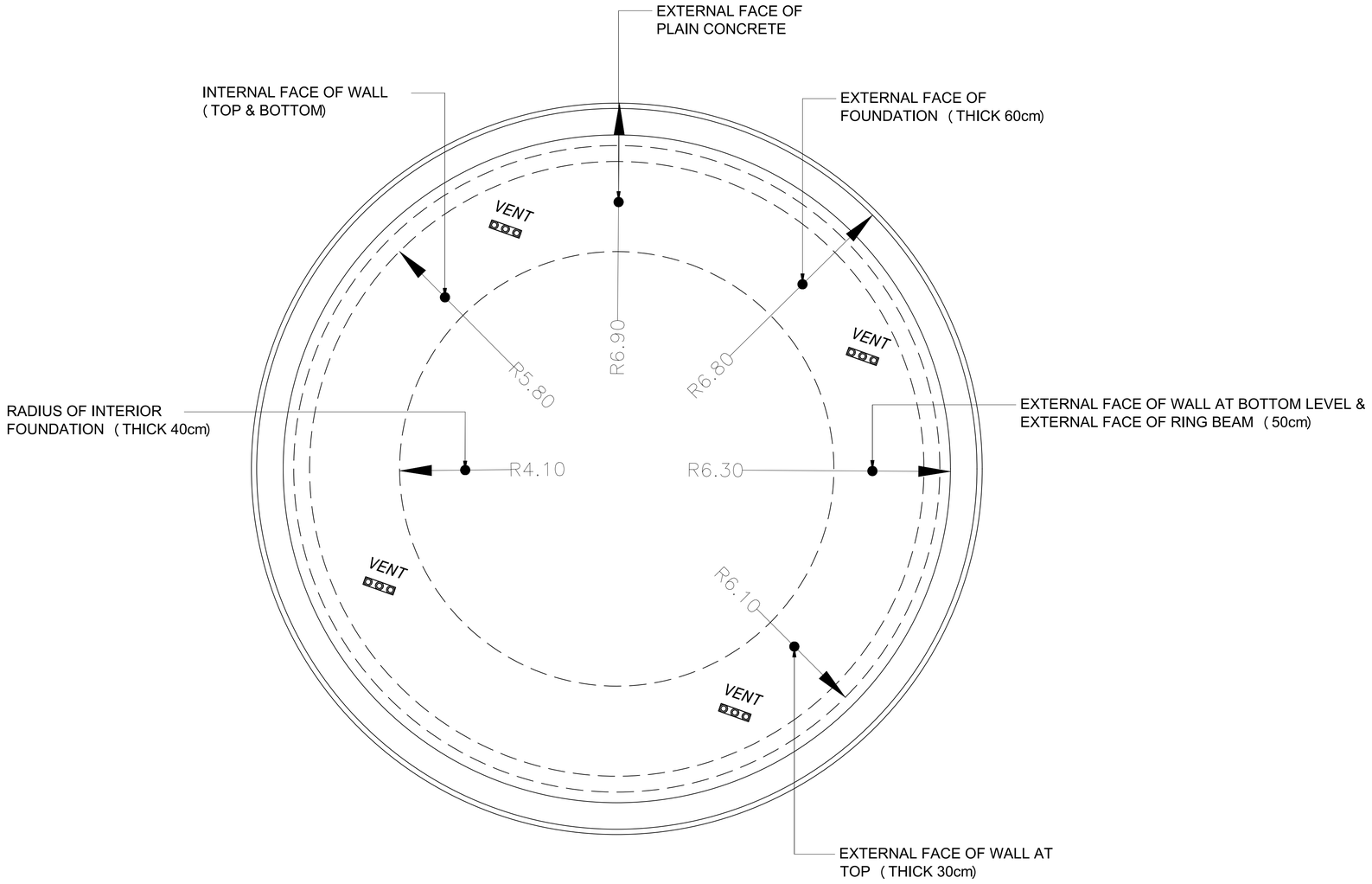

0 GRAPHIC SCALE 5m

* IF PRINTING ON A1- 1:100
* IF PRINTING ON A3- 1:200

NOTES

1. ALL DIMENSIONS ARE IN METERS. EXCEPT WHERE OTHERWISE SHOWN OR NOTED.
2. IT IS THE CONTRACTOR RESPONSIBILITY TO PREPARE AND SUBMIT WORKSHOP DRAWING FOR ENGINEERS BEFORE START WORKS.
3. IF THERE IS ANY DISCREPANCY IN DRAWINGS THE CONTRACTOR MUST CONSIDER IT IN HIS PRICE.
4. INTERNAL AND EXTERNAL WALLS AND RING BEAMS OF WATER TANK SHALL BE FAIR FACE FINISH USING THE METALLIC OR SMOOTH PLYWOOD SHUTTERING.
5. BACKFILL USING APPROVED GRANULAR MATERIAL COMPACTED IN 20CM LAYERS.
6. FOUNDATION LEVEL SHALL BE APPROVED BY ENGINEER.

Rev.	Date	Description	Drawn	Checked	Approved
2	24.08.2021	Draft Detailed Design	BM	OB	BA
1	01.08.2021	Draft Detailed Design	BM	OB	BA

Project: Support to Infrastructure Works for Phase II:
Jericho Agro-Industrial Park and Deep Water Well Drilling

Contract No.: .....

Subject: Detail Design

Construction of Deep Well and Transmission Pipeline for JAIP
Well Site - Tank Details
Architectural Plan

Designed: Samed Burnat
Drawn: Bahaa Al Mur
Checked: Osama Bazzour
Approved: Bassam Abu Zahra
File Name: JAIP-W-TANK-A.dwg
Date: 19-09-2021
Scale: 1: 50
Size: A1
Drawing No: JAIP-W-TANK-A-01
Sheet: 020/105
Rev.: 01

مركز الهندسة والتخطيط
center for engineering and planning

Center for Engineering and Planning
Ramallah, Palestine
Al Bireh - Al Medan St. Against Al Watanya Towers
P.O.Box 301

FINAL
2021-09-19

Owner: بلدية أريحا
Jericho Municipality

Operator: سلطة المياه الفلسطينية
PALESTINIAN WATER AUTHORITY

Donor: من الشعب الياباني
From the People of Japan

Implementing Agency:
United Nations Development Programme
Programme of Assistance to the Palestinian People
برنامج الأمم المتحدة الإنمائي برنامج مساعدة الشعب الفلسطيني

This document is the property of Center for Engineering and Planning (CEP), any duplication or transmition to third parties is forbidden without its prior approval.

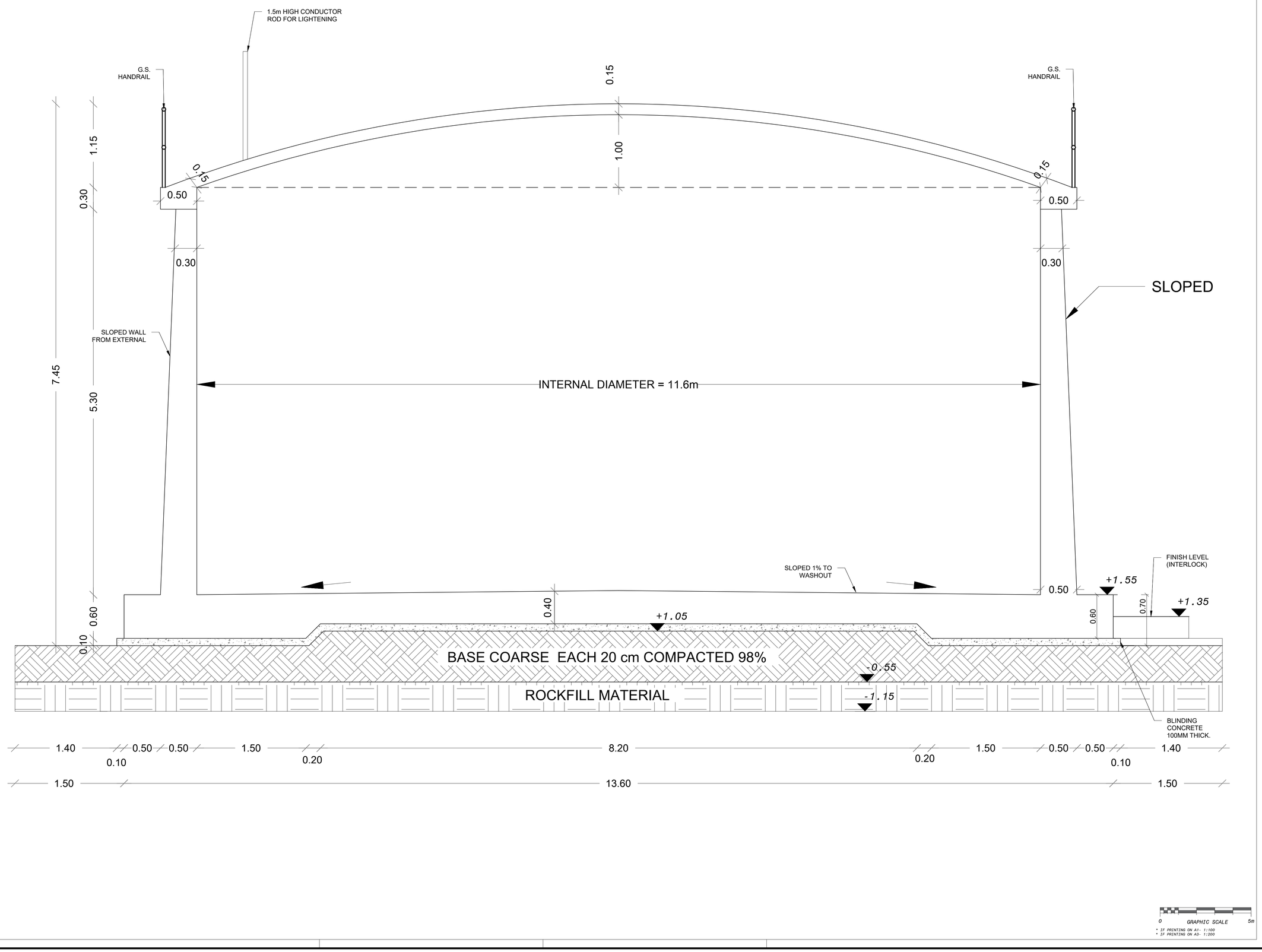

NOTES

1. ALL DIMENSIONS ARE IN METERS. EXCEPT WHERE OTHERWISE SHOWN OR NOTED.
2. IT IS THE CONTRACTOR RESPONSIBILITY TO PREPARE AND SUBMIT WORKSHOP DRAWING FOR ENGINEERS BEFORE START WORKS.
3. IF THERE IS ANY DISCREPANCY IN DRAWINGS THE CONTRACTOR MUST CONSIDER IT IN HIS PRICE.
4. INTERNAL AND EXTERNAL WALLS AND RING BEAMS OF WATER TANK SHALL BE FAIR FACE FINISH USING THE METALLIC OR SMOOTH PLYWOOD SHUTTERING.
5. A LAYER OF 1.0 M DEPTH OF DIAMETER 16.6M UNDER THE TANK SHALL BE REPLACED AND BACKFILLED WITH ROCKFILL MATERIAL AND BASE COARSE.

NOTES

6. A PLATE BEARING TEST SHALL BE CONDUCTED UNDER THE TANK FOUNDATION TO EVALUATE THE ACTUAL BEARING CAPACITY BEFORE CASTING ANY CONCRETE.
7. BACKFILL USING APPROVED GRANULAR MATERIAL COMPACTED IN 20CM LAYERS.
8. FOUNDATION LEVEL SHALL BE APPROVED BY ENGINEER.
9. EXISTING GROUND ELEVATION AT MAIN GATE = +239.75m = +0.00

Rev.	Date	Description	Drawn	Checked	Approved

Project: Support to Infrastructure Works for Phase II:
Jericho Agro-Industrial Park and Deep Water Well Drilling

Contract No.: .....

Subject: Detail Design
Construction of Deep Well and Transmission Pipeline for JAIP
Well Site - Tank Details
Section Details

Designed: Samed Burnat
Drawn: Bahaa Al Mur
Checked: Osama Bazzour
Approved: Bassam Abu Zahra
File Name: JAIP-W-TANK-A.dwg
Date: 19-09-2021
Scale: 1: 25
Size: A1
Drawing No.: JAIP-W-TANK-A-02
Sheet: 021/105
Rev.: 01

مركز الهندسة والتخطيط
center for engineering and planning

Center for Engineering and Planning
Ramallah - Palestine
Al Birah - Al Medan St. Against Al Watanya Towers
P.O.Box 301

FINAL
2021-09-19

Donor: من الشعب الياباني
From the People of Japan

Owner: سلطة المياه الفلسطينية
PALESTINIAN WATER AUTHORITY

Operator: بلدية أريحا
Jericho Municipality

Implementing Agency: United Nations Development Programme
Programme of Assistance to the Palestinian People
برنامج الأمم المتحدة الإنمائي برنامج مساعدة شعب فلسطين
UNDP

This document is the property of Center for Engineering and Planning (CEP) , any duplication or transmission to third parties is forbidden without its prior approval.

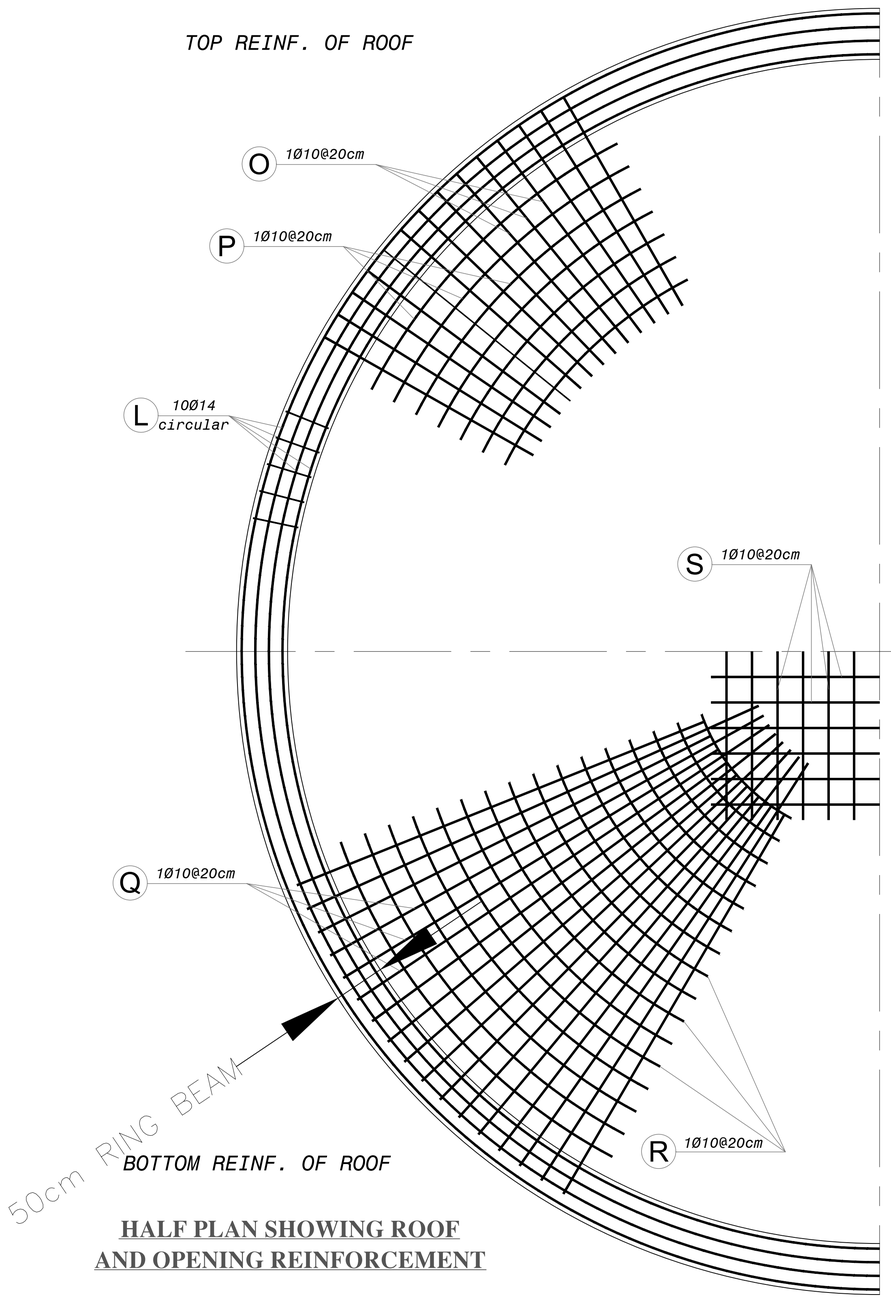

HALF PLAN SHOWING ROOF AND OPENING REINFORCEMENT

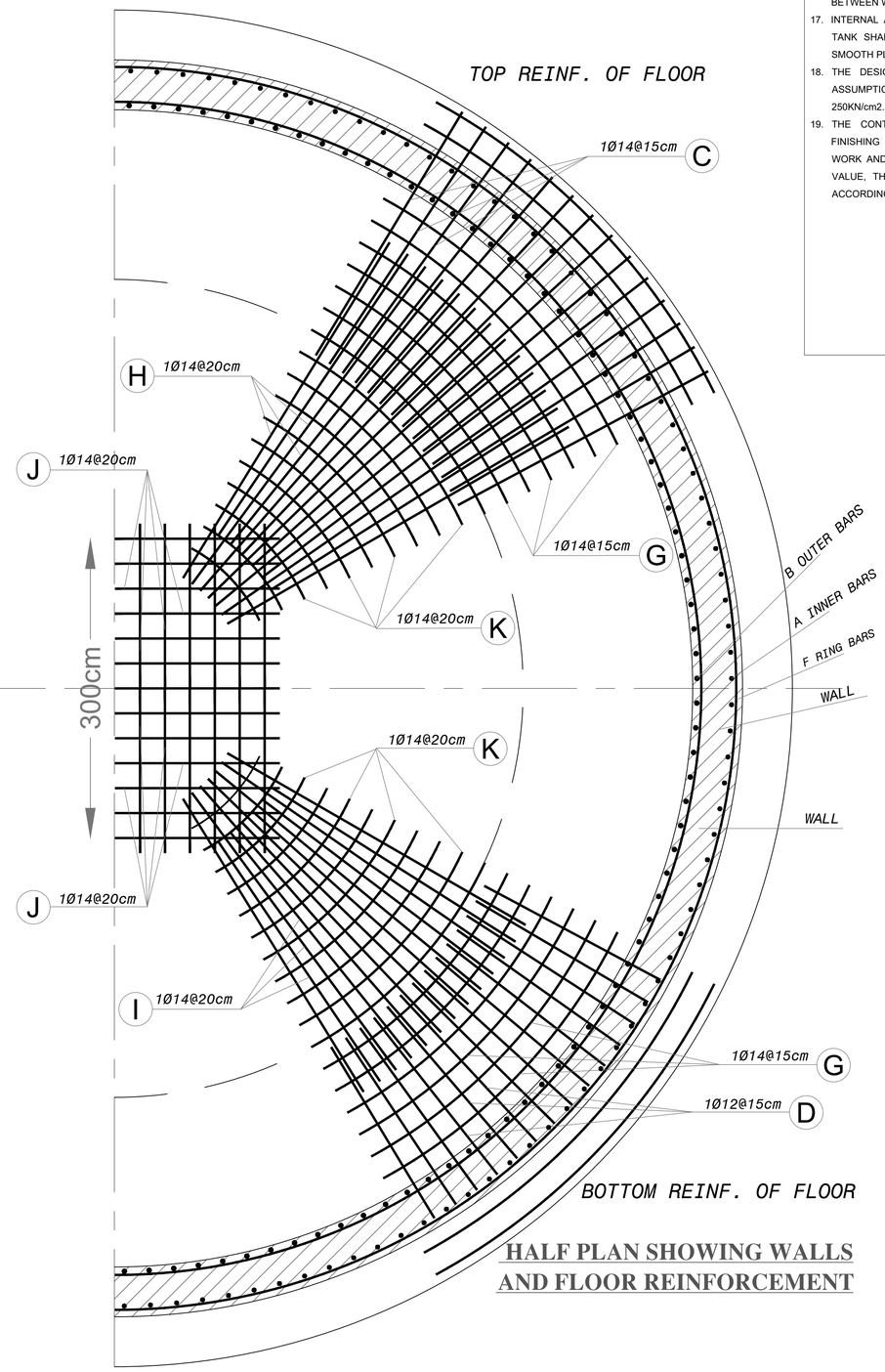

HALF PLAN SHOWING WALLS AND FLOOR REINFORCEMENT

NOTES

14. THE INTERNAL FACES (WALL, FOOTING, RING BEAM AND ROOF SLAB) SHALL RECEIVE PAINT AT MINIMUM 2-COATS OF EPOXY PAINTING FOR WETTED SURFACES (WATER).
15. THE EXTERNAL FACES (WALLS, ROOF SLAB AND RING BEAM) SHALL BR PAINTED AT ONE COAT OF REPELLENT MATERIAL TO FILL VOIDS AND MINIMUM TWO COATS OF DEKGUARD FC WITH 200 MICRONS TOTAL THICK.
16. SHEETS WIDTH 300MM AND THICKNESS 18MM FOR JOINT BETWEEN WALL & RING BEAMS.
17. INTERNAL AND EXTERNAL WALLS AND RING BEAMS OF WATER TANK SHALL BE FAIR FACE FINISH USING THE METALLIC OR SMOOTH PLYWOOD SHUTTERING FORMS.
18. THE DESIGN OF TANK FOUNDATION WAS BASED ON THE ASSUMPTION THAT THE BEARING CAPACITY OF THE SOIL IS 250KN/cm2.
19. THE CONTRACTOR SHALL CARRY OUT SOIL TEST AFTER FINISHING EXCAVATION WORKS AND BEFORE ANY CONCRETE WORK AND IN CASE THE CAPACITY IS LESS THAN THE DESIGN VALUE, THEN THE DESIGN OF FOOTING SHALL BE MODIFIED ACCORDINGLY.

BENDS R — HOOKS R

BAR SIZE	GRADE 250 (TYPE & GRADE R)	GRADE 420 (TYPE AND GRADE T)
D	R	R
6	12	18
8	16	24
10	20	30
12	24	36
14	28	42
16	32	48
18	36	54
20	40	60
22	44	66
25	50	75

NOTES

1. ALL DIMENSIONS ARE IN METERS. EXCEPT WHERE OTHERWISE SHOWN OR NOTED.
2. IT IS THE CONTRACTOR RESPONSIBILITY TO PREPARE AND SUBMIT WORKSHOP DRAWING FOR ENGINEERS BEFORE START WORKS.
3. IF THERE IS ANY DISCREPANCY IN DRAWINGS THE CONTRACTOR MUST CONSIDER IT IN HIS PRICE.
4. DESIGN CODE ACI 318M-14.
5. THE OUTSIDE OF REINFORCED CONC. STRUCTURE (UNDER GROUND) SHALL PAINT 2-COATS OF HOT BITUMEN OR AS SPECIFIED.
6. FOR ANY CONCRETE CONTACT WITH SOIL SHALL BE LAID POLYTHENE SHEET 500 MICRON.

NOTES

9. STEEL COVERS:
   - FOR FOUNDATIONS (CAST AGAINST SOIL) =7.5 CM
   - (FOR PROTECTED CONCRETE) =5.0 CM
   - FOR COLUMNS =4.0 CM
   - FOR SLABS =2.5 CM
   - FOR BEAMS =4.0 CM
10. COMPRESSIVE STRENGTH OF CONCRETE USED FOR FOUND., WALLS, RING BEAM, & ROOF SLAB (DOME) IS (B400).
11. COMPRESSIVE STRENGTH OF CONCRETE USED FOR PLAIN CONCRETE & OTHER LINKS IS (B200).
12. REINFORCEMENT STEEL USED IS HIGH TENSION STEEL OF YIELD STRENGTH (G420) fY=4200 KG/CM2.
13. MINIMUM LAP FOR STEEL BAR = 60 CM OR 60 x DIAMETER OF BAR WHICH IS GREATER.

Rev.	Date	Description	Drawn	Checked	Approved
2	24.08.2021	Draft Detailed Design	BM	OB	BA
1	01.08.2021	Draft Detailed Design	BM	OB	BA

Project: Support to Infrastructure Works for Phase II: Jericho Agro-Industrial Park and Deep Water Well Drilling

Contract No.: .....

Subject: Detail Design

Construction of Deep Well and Transmission Pipeline for JAIP
Well Site - Civil
Tank Roof Slab and Foundation Reinforcement

Designed: Samed Burnat
Drawn: Bahaa Al Mur
Checked: Osama Bazzour
Approved: Bassam Abu Zahra
File Name: JAIP-W-TANK-C.dwg
Date: 24-08-2021
Scale: 1 : 30
Size: A1
Drawing No.: JAIP-W-TANK-C-01
Sheet: 022/105
Rev.: 01

مركز الهندسة والتخطيط
center for engineering and planning

Center for Engineering and Planning
Ramallah, Palestine
Al Bireh - Al Medan St. Against Al Waleriya Towers
P.O.Box 301

F I N A L
2021-09-19

Implementing Agency:
United Nations Development Programme
Programme of Assistance to the Palestinian People
برنامج الأمم المتحدة الإنمائي برنامج مساعدة الشعب الفلسطيني
UNDP

Operator:
بلدية أريحا
Jericho Municipality

Owner:
سلطة المياه الفلسطينية
PALESTINIAN WATER AUTHORITY

Donor:
From the People of Japan
من الشعب الياباني

This document is the property of Center for Engineering and Planning (CEP) , any duplication or transmition to third parties is forbidden without its prior approval.

GRAPHIC SCALE 0 — 5m
* IF PRINTING ON A1- 1:100
* IF PRINTING ON A3- 1:200

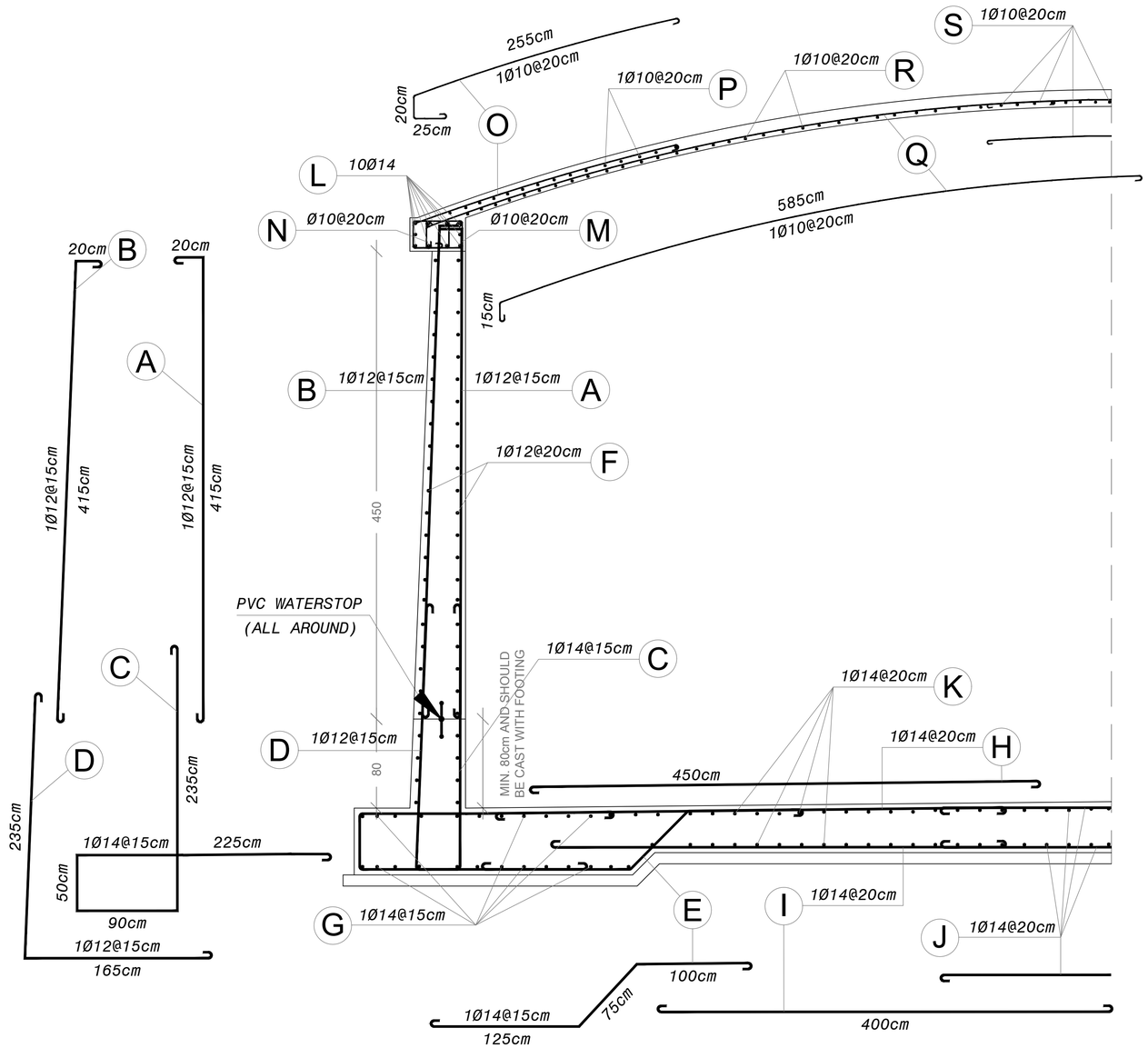

NOTES

14. THE INTERNAL FACES (WALL, FOOTING, RING BEAM AND ROOF SLAB) SHALL RECEIVE PAINT AT MINIMUM 2-COATS OF EPOXY PAINTING FOR WETTED SURFACES (WATER).
15. THE EXTERNAL FACES (WALLS, ROOF SLAB AND RING BEAM) SHALL BR PAINTED AT ONE COAT OF REPELLENT MATERIAL TO FILL VOIDS AND MINIMUM TWO COATS OF DEKGUARD FC WITH 200 MICRONS TOTAL THICK.
16. SHEETS WIDTH 300MM AND THICKNESS 18MM FOR JOINT BETWEEN WALL & RING BEAMS.
17. INTERNAL AND EXTERNAL WALLS AND RING BEAMS OF WATER TANK SHALL BE FAIR FACE FINISH USING THE METALLIC OR SMOOTH PLYWOOD SHUTTERING FORMS.
18. THE DESIGN OF TANK FOUNDATION WAS BASED ON THE ASSUMPTION THAT THE BEARING CAPACITY OF THE SOIL IS 250KN/cm2.
19. THE CONTRACTOR SHALL CARRY OUT SOIL TEST AFTER FINISHING EXCAVATION WORKS AND BEFORE ANY CONCRETE WORK AND IN CASE THE CAPACITY IS LESS THAN THE DESIGN VALUE, THEN THE DESIGN OF FOOTING SHALL BE MODIFIED ACCORDINGLY.

BENDS R — HOOKS R

BAR SIZE	GRADE 250 (TYPE & GRADE R)	GRADE 420 (TYPE AND GRADE T)
D	R	R
6	12	18
8	16	24
10	20	30
12	24	36
14	28	42
16	32	48
18	36	54
20	40	60
22	44	66
25	50	75

BAR CUTTING LIST

Group	Type	Ø mm	No. of Bars	Length (m)	Shape	Total Length (m) Ø10	Ø12	Ø14
DOME + WALLS + FLOOR	A	12	244	4.35			1062	
	B	12	258	4.35			1123	
	C	14	258	6.00				1548
	D	12	258	4.00			1032	
	E	14	258	3.00				774
	F	12	50	41.0	Ring		2050	
	G	14	Varies		Ring			1368
	H	14	258	4.50				1161
	I	14	258	4.00				1032
	J	14	64	3.30				212
	K	14	Varies		Ring			532
	L	14	10	42.0	Ring			420
	M	10	190	1.50		285		
	N	10	190	1.10		209		
	O	10	190	3.00		570		
	P	10	Varies		Ring	407		
	Q	10	190	6.00		1140		
	R	10	Varies		Ring	625		
	S	10	32	3.30		106		
	T	12	8	1.45			12	
	U	12	8	2.00			16	
	V	10	20	0.45		9		
	W	14	8	1.00				8
Total Length (m)						3351	5295	7055
Weight (kg)						0.617	0.890	1.210
Total Weight (kg)						2068	4713	8537
Total Weight (ton)						15.3 ton		

0 GRAPHIC SCALE 5m

* IF PRINTING ON A1- 1:100
* IF PRINTING ON A3- 1:200

NOTES

9. STEEL COVERS:
   - FOR FOUNDATIONS (CAST AGAINST SOIL) =7.5 CM
   - (FOR PROTECTED CONCRETE) =5.0 CM
   - FOR COLUMNS =4.0 CM
   - FOR SLABS =2.5 CM
   - FOR BEAMS =4.0 CM
10. COMPRESSIVE STRENGTH OF CONCRETE USED FOR FOUND., WALLS, RING BEAM, & ROOF SLAB (DOME) IS (B400).
11. COMPRESSIVE STRENGTH OF CONCRETE USED FOR PLAIN CONCRETE & OTHER LINKS IS (B200).
12. REINFORCEMENT STEEL USED IS HIGH TENSION STEEL OF YIELD STRENGTH (G420) fY=4200 KG/CM2.
13. MINIMUM LAP FOR STEEL BAR = 60 CM OR 60 x DIAMETER OF BAR WHICH IS GREATER.

NOTES

1. ALL DIMENSIONS ARE IN METERS. EXCEPT WHERE OTHERWISE SHOWN OR NOTED.
2. IT IS THE CONTRACTOR RESPONSIBILITY TO PREPARE AND SUBMIT WORKSHOP DRAWING FOR ENGINEERS BEFORE START WORKS.
3. IF THERE IS ANY DISCREPANCY IN DRAWINGS THE CONTRACTOR MUST CONSIDER IT IN HIS PRICE.
4. DESIGN CODE ACI 318M-14.
5. THE OUTSIDE OF REINFORCED CONC. STRUCTURE (UNDER GROUND) SHALL PAINT 2-COATS OF HOT BITUMEN OR AS SPECIFIED.
6. FOR ANY CONCRETE CONTACT WITH SOIL SHALL BE LAID POLYTHENE SHEET 500 MICRON.

Rev.	Date	Description	Drawn	Checked	Approved
2	24.08.2021	Draft Detailed Design	BM	OB	BA
1	01.08.2021	Draft Detailed Design	BM	OB	BA

Project: Support to Infrastructure Works for Phase II: Jericho Agro-Industrial Park and Deep Water Well Drilling

Contract No.: .....

Subject: Detail Design

Construction of Deep Well and Transmission Pipeline for JAIP
Well Site - Civil
Tank Section Reinforcement Details and Bars Cutting List

Designed: Samed Burnat
Drawn: Bahaa Al Mur
Checked: Osama Bazzour
Approved: Bassam Abu Zahra
File Name: JAIP-W-TANK-C.dwg
Date: 24-08-2021
Scale: 1: 25
Size: A1
Drawing No.: JAIP-W-TANK-C-02
Sheet: 023/105
Rev.: 01

مركز الهندسة والتخطيط
center for engineering and planning

Center for Engineering and Planning
Ramallah - Palestine
Al Birah - Al Medan St. Against Al Watanya Towers
P.O.Box 381

FINAL
2021-09-19

Donor: من الشعب الياباني
From the People of Japan

Owner: سلطة المياه الفلسطينية
PALESTINIAN WATER AUTHORITY

Operator: بلدية أريحا
Jericho Municipality

Implementing Agency: United Nations Development Programme
Programme of Assistance to the Palestinian People
برنامج الأمم المتحدة الإنمائي برنامج مساعدة الشعب الفلسطيني
UNDP

This document is the property of Center for Engineering and Planning (CEP) , any duplication or transmittes to third parties is forbidden without its prior approval.

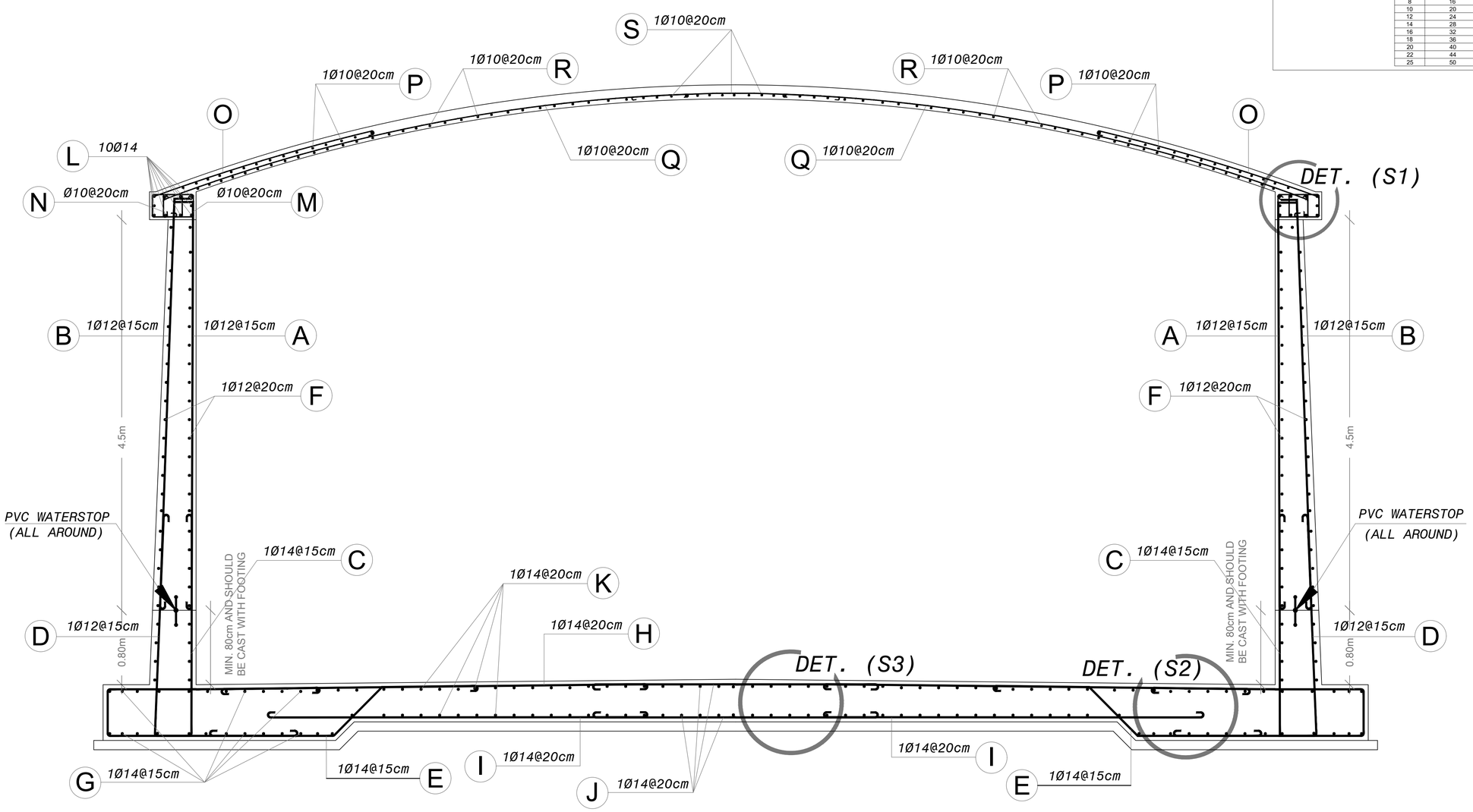

NOTES

14. THE INTERNAL FACES (WALL, FOOTING, RING BEAM AND ROOF SLAB) SHALL RECEIVE PAINT AT MINIMUM 2-COATS OF EPOXY PAINTING FOR WETTED SURFACES (WATER).
15. THE EXTERNAL FACES (WALLS, ROOF SLAB AND RING BEAM) SHALL BR PAINTED AT ONE COAT OF REPELLENT MATERIAL TO FILL VOIDS AND MINIMUM TWO COATS OF DEKGUARD FC WITH 200 MICRONS TOTAL THICK.
16. SHEETS WIDTH 300MM AND THICKNESS 18MM FOR JOINT BETWEEN WALL & RING BEAMS.
17. INTERNAL AND EXTERNAL WALLS AND RING BEAMS OF WATER TANK SHALL BE FAIR FACE FINISH USING THE METALLIC OR SMOOTH PLYWOOD SHUTTERING FORMS.
18. THE DESIGN OF TANK FOUNDATION WAS BASED ON THE ASSUMPTION THAT THE BEARING CAPACITY OF THE SOIL IS 250KN/cm2.
19. THE CONTRACTOR SHALL CARRY OUT SOIL TEST AFTER FINISHING EXCAVATION WORKS AND BEFORE ANY CONCRETE WORK AND IN CASE THE CAPACITY IS LESS THAN THE DESIGN VALUE, THEN THE DESIGN OF FOOTING SHALL BE MODIFIED ACCORDINGLY.

BENDS R		HOOKS R
BAR SIZE	GRADE 250 (TYPE & GRADE R)	GRADE 420 (TYPE AND GRADE T)
D	R	R
6	12	18
8	16	24
10	20	30
12	24	36
14	28	42
16	32	48
18	36	54
20	40	60
22	44	66
25	50	75

NOTES

1. ALL DIMENSIONS ARE IN METERS. EXCEPT WHERE OTHERWISE SHOWN OR NOTED.
2. IT IS THE CONTRACTOR RESPONSIBILITY TO PREPARE AND SUBMIT WORKSHOP DRAWING FOR ENGINEERS BEFORE START WORKS.
3. IF THERE IS ANY DISCREPANCY IN DRAWINGS THE CONTRACTOR MUST CONSIDER IT IN HIS PRICE.
4. DESIGN CODE ACI 318M-14.
5. THE OUTSIDE OF REINFORCED CONC. STRUCTURE (UNDER GROUND) SHALL PAINT 2-COATS OF HOT BITUMEN OR AS SPECIFIED.
6. FOR ANY CONCRETE CONTACT WITH SOIL SHALL BE LAID POLYTHENE SHEET 500 MICRON.

NOTES

9. STEEL COVERS:
   - FOR FOUNDATIONS (CAST AGAINST SOIL) =7.5 CM
   - (FOR PROTECTED CONCRETE) =5.0 CM
   - FOR COLUMNS =4.0 CM
   - FOR SLABS =2.5 CM
   - FOR BEAMS =4.0 CM
10. COMPRESSIVE STRENGTH OF CONCRETE USED FOR FOUND., WALLS, RING BEAM, & ROOF SLAB (DOME) IS (B400).
11. COMPRESSIVE STRENGTH OF CONCRETE USED FOR PLAIN CONCRETE & OTHER LINKS IS (B200).
12. REINFORCEMENT STEEL USED IS HIGH TENSION STEEL OF YIELD STRENGTH (G420) fY=4200 KG/CM2.
13. MINIMUM LAP FOR STEEL BAR = 60 CM OR 60 x DIAMETER OF BAR WHICH IS GREATER.

Rev.	Date	Description	Drawn	Checked	Approved
2	24.08.2021	Draft Detailed Design	BM	OB	BA
1	01.08.2021	Draft Detailed Design	BM	OB	BA

Project: Support to Infrastructure Works for Phase II: Jericho Agro-Industrial Park and Deep Water Well Drilling

Contract No.: .....

Subject: Detail Design

Construction of Deep Well and Transmission Pipeline for JAIP
Well Site - Civil
Tank Section Reinforcement Details - I

Designed: Samed Burnat
Drawn: Bahaa Al Mur
Checked: Osama Bazzour
Approved: Bassam Abu Zahra
File name: JAIP-W-TANK-C.dwg
Date: 24-08-2021
Scale: 1: 25
Size: A1
Drawing No.: JAIP-W-TANK-C-03
Sheet: 024/105
Rev.: 01

مركز الهندسة والتخطيط
center for engineering and planning

Center for Engineering and Planning
Ramallah, Palestine
Al Bireh - Al Medan St. Against Al Watanya Towers
P.O.Box 301

FINAL
2021-09-19

Implementing Agency:
United Nations Development Programme
Programme of Assistance to the Palestinian People
برنامج الأمم المتحدة الإنمائي برنامج مساعدة الشعب الفلسطيني
UNDP

Operator:
Jericho Municipality
بلدية أريحا

Owner:
سلطة المياه الفلسطينية
PALESTINIAN WATER AUTHORITY

Donor:
From the People of Japan
من الشعب الياباني

This document is the property of Center for Engineering and Planning (CEP) , any duplication or transmition to third parties is forbidden without its prior approval.

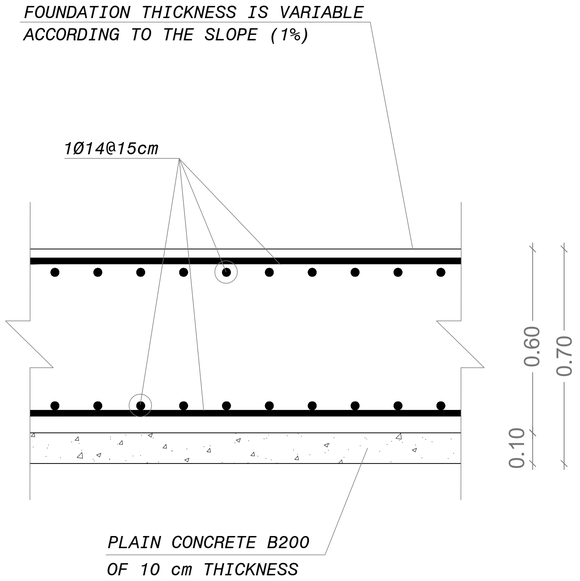

DETAIL (S2)

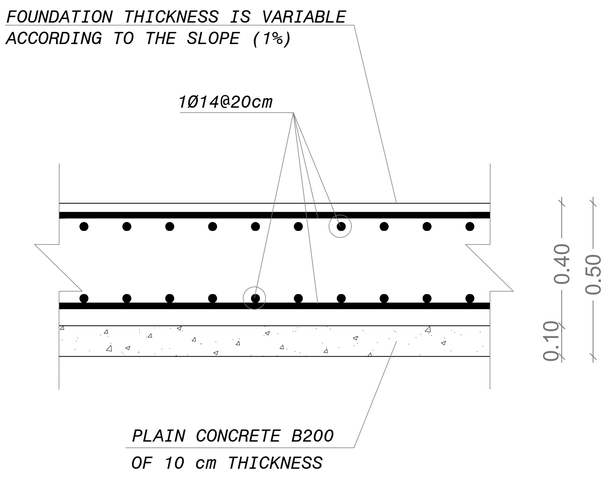

DETAIL (S3)

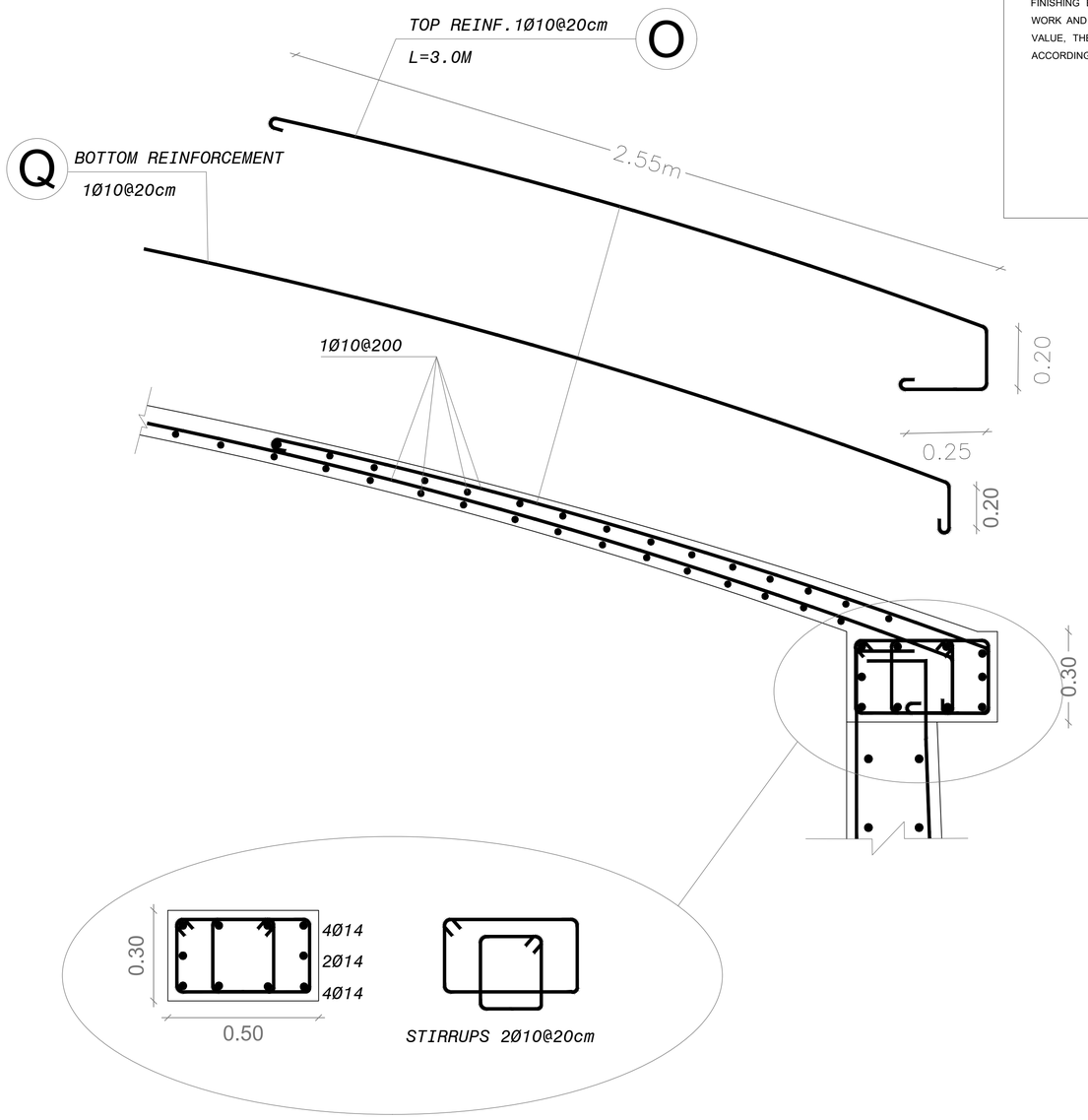

DETAIL (S1)

NOTES

14. THE INTERNAL FACES (WALL, FOOTING, RING BEAM AND ROOF SLAB) SHALL RECEIVE PAINT AT MINIMUM 2-COATS OF EPOXY PAINTING FOR WETTED SURFACES (WATER).
15. THE EXTERNAL FACES (WALLS, ROOF SLAB AND RING BEAM) SHALL BR PAINTED AT ONE COAT OF REPELLENT MATERIAL TO FILL VOIDS AND MINIMUM TWO COATS OF DEKGUARD FC WITH 200 MICRONS TOTAL THICK.
16. SHEETS WIDTH 300MM AND THICKNESS 18MM FOR JOINT BETWEEN WALL & RING BEAMS.
17. INTERNAL AND EXTERNAL WALLS AND RING BEAMS OF WATER TANK SHALL BE FAIR FACE FINISH USING THE METALLIC OR SMOOTH PLYWOOD SHUTTERING FORMS.
18. THE DESIGN OF TANK FOUNDATION WAS BASED ON THE ASSUMPTION THAT THE BEARING CAPACITY OF THE SOIL IS 250KN/cm2.
19. THE CONTRACTOR SHALL CARRY OUT SOIL TEST AFTER FINISHING EXCAVATION WORKS AND BEFORE ANY CONCRETE WORK AND IN CASE THE CAPACITY IS LESS THAN THE DESIGN VALUE, THEN THE DESIGN OF FOOTING SHALL BE MODIFIED ACCORDINGLY.

BENDS	R	HOOKS	R
BAR SIZE	GRADE 250 (TYPE & GRADE R)	GRADE 420 (TYPE AND GRADE T)	
D	R	R	
6	12	18	
8	16	24	
10	20	30	
12	24	36	
14	28	42	
16	32	48	
18	36	54	
20	40	60	
22	44	66	
25	50	75	

NOTES

1. ALL DIMENSIONS ARE IN METERS. EXCEPT WHERE OTHERWISE SHOWN OR NOTED.
2. IT IS THE CONTRACTOR RESPONSIBILITY TO PREPARE AND SUBMIT WORKSHOP DRAWING FOR ENGINEERS BEFORE START WORKS.
3. IF THERE IS ANY DISCREPANCY IN DRAWINGS THE CONTRACTOR MUST CONSIDER IT IN HIS PRICE.
4. DESIGN CODE ACI 318M-14.
5. THE OUTSIDE OF REINFORCED CONC. STRUCTURE (UNDER GROUND) SHALL PAINT 2-COATS OF HOT BITUMEN OR AS SPECIFIED.
6. FOR ANY CONCRETE CONTACT WITH SOIL SHALL BE LAID POLYTHENE SHEET 500 MICRON.

NOTES

9. STEEL COVERS:
   - FOR FOUNDATIONS (CAST AGAINST SOIL) =7.5 CM
   - (FOR PROTECTED CONCRETE) =5.0 CM
   - FOR COLUMNS =4.0 CM
   - FOR SLABS =2.5 CM
   - FOR BEAMS =4.0 CM
10. COMPRESSIVE STRENGTH OF CONCRETE USED FOR FOUND., WALLS, RING BEAM, & ROOF SLAB (DOME) IS (B400).
11. COMPRESSIVE STRENGTH OF CONCRETE USED FOR PLAIN CONCRETE & OTHER LINKS IS (B200).
12. REINFORCEMENT STEEL USED IS HIGH TENSION STEEL OF YIELD STRENGTH (G420) fY=4200 KG/CM2.
13. MINIMUM LAP FOR STEEL BAR = 60 CM OR 60 x DIAMETER OF BAR WHICH IS GREATER.

Rev.	Date	Description	Drawn	Checked	Approved
2	24.08.2021	Draft Detailed Design	BM	OB	BA
1	01.08.2021	Draft Detailed Design	BM	OB	BA

Project: Support to Infrastructure Works for Phase II: Jericho Agro-Industrial Park and Deep Water Well Drilling

Contract No.: .....

Subject: Detail Design

Construction of Deep Well and Transmission Pipeline for JAIP
Well Site - Civil
Tank Section Reinforcement Details - II

Designed: Samed Burnat
Drawn: Bahaa Al Mur
Checked: Osama Bazzour
Approved: Bassam Abu Zahra
File Name: JAIP-W-TANK-C.dwg
Date: 24-08-2021
Scale: 1 : 10
Size: A1
Drawing No.: JAIP-W-TANK-C-04
Sheet: 025/105
Rev.: 01

مركز الهندسة والتخطيط
center for engineering and planning

FINAL
2021-09-19

Center for Engineering and Planning
Ramallah, Palestine
Al Bireh - Al Medan St. Against Al Watanya Towers
P.O.Box 301

Donor: من الشعب الياباني
From the People of Japan

Owner: سلطة المياه الفلسطينية
PALESTINIAN WATER AUTHORITY

Operator: بلدية أريحا
Jericho Municipality

Implementing Agency: United Nations Development Programme
Programme of Assistance to the Palestinian People
برنامج الأمم المتحدة الإنمائي برنامج مساعدة الشعب الفلسطيني

This document is the property of Center for Engineering and Planning (CEP) , any duplication or transmition to third parties is forbidden without its prior approval.

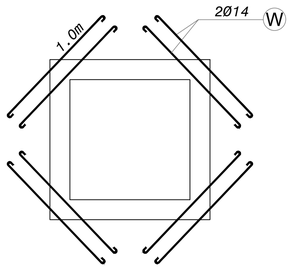

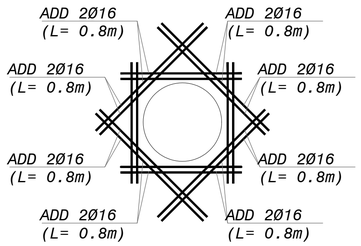

REINF. AROUND OPENING IN WALLS (PIPES)

EACH FACE (EXT. & INT.) LESS THAN 300mm

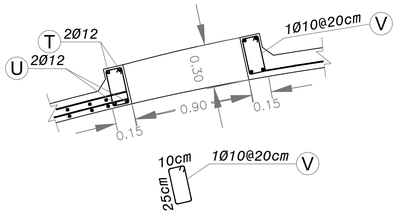

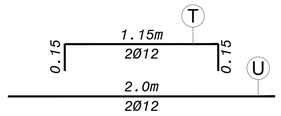

DETAIL OF ENTRANCE

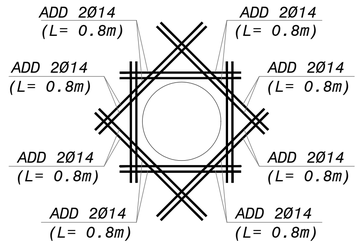

REINF. AROUND OPENING IN DOME (PIPES)

EACH FACE (EXT. &/OR INT.) LESS THAN 300mm

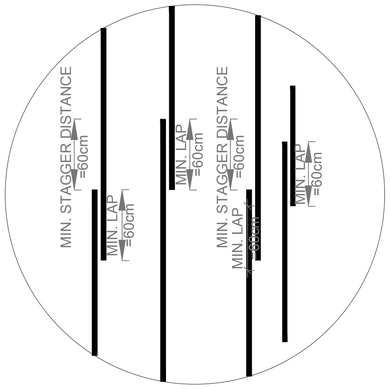

TYPICAL STAGGERING REINFORCEMENT DETAILS

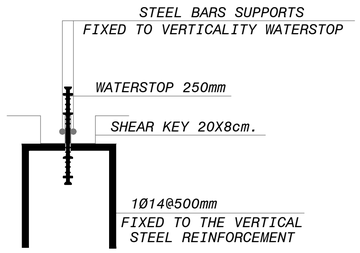

CONSTRUCTION JOINT FIXING METHOD

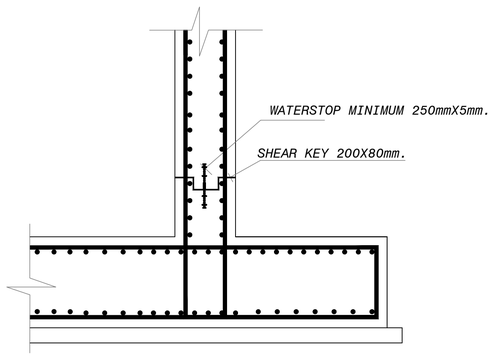

TYPICAL WALL CONSTRUCTION JOINT

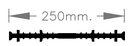

P.V.C. WATERSTOP FOR
WALL CONSTRUCTION JOINT

NOTES

14. THE INTERNAL FACES (WALL, FOOTING, RING BEAM AND ROOF SLAB) SHALL RECEIVE PAINT AT MINIMUM 2-COATS OF EPOXY PAINTING FOR WETTED SURFACES (WATER).
15. THE EXTERNAL FACES (WALLS, ROOF SLAB AND RING BEAM) SHALL BR PAINTED AT ONE COAT OF REPELLENT MATERIAL TO FILL VOIDS AND MINIMUM TWO COATS OF DEKGUARD FC WITH 200 MICRONS TOTAL THICK.
16. SHEETS WIDTH 300MM AND THICKNESS 18MM FOR JOINT BETWEEN WALL & RING BEAMS.
17. INTERNAL AND EXTERNAL WALLS AND RING BEAMS OF WATER TANK SHALL BE FAIR FACE FINISH USING THE METALLIC OR SMOOTH PLYWOOD SHUTTERING FORMS.
18. THE DESIGN OF TANK FOUNDATION WAS BASED ON THE ASSUMPTION THAT THE BEARING CAPACITY OF THE SOIL IS 250KN/cm2.
19. THE CONTRACTOR SHALL CARRY OUT SOIL TEST AFTER FINISHING EXCAVATION WORKS AND BEFORE ANY CONCRETE WORK AND IN CASE THE CAPACITY IS LESS THAN THE DESIGN VALUE, THEN THE DESIGN OF FOOTING SHALL BE MODIFIED ACCORDINGLY.

BENDS	R	HOOKS	R
BAR SIZE	GRADE 250 (TYPE & GRADE R)	GRADE 420 (TYPE AND GRADE T)	
D	R	R	
6	12	18	
8	16	24	
10	20	30	
12	24	36	
14	28	42	
16	32	48	
18	36	54	
20	40	60	
22	44	66	
25	50	75	

NOTES

1. ALL DIMENSIONS ARE IN METERS. EXCEPT WHERE OTHERWISE SHOWN OR NOTED.
2. IT IS THE CONTRACTOR RESPONSIBILITY TO PREPARE AND SUBMIT WORKSHOP DRAWING FOR ENGINEERS BEFORE START WORKS.
3. IF THERE IS ANY DISCREPANCY IN DRAWINGS THE CONTRACTOR MUST CONSIDER IT IN HIS PRICE.
4. DESIGN CODE ACI 318M-14.
5. THE OUTSIDE OF REINFORCED CONC. STRUCTURE (UNDER GROUND) SHALL PAINT 2-COATS OF HOT BITUMEN OR AS SPECIFIED.
6. FOR ANY CONCRETE CONTACT WITH SOIL SHALL BE LAID POLYTHENE SHEET 500 MICRON.
9. STEEL COVERS:
   - FOR FOUNDATIONS (CAST AGAINST SOIL) =7.5 CM
   - (FOR PROTECTED CONCRETE) =5.0 CM
   - FOR COLUMNS =4.0 CM
   - FOR SLABS =2.5 CM
   - FOR BEAMS =4.0 CM
10. COMPRESSIVE STRENGTH OF CONCRETE USED FOR FOUND., WALLS, RING BEAM, & ROOF SLAB (DOME) IS (B400).
11. COMPRESSIVE STRENGTH OF CONCRETE USED FOR PLAIN CONCRETE & OTHER LINKS IS (B200).
12. REINFORCEMENT STEEL USED IS HIGH TENSION STEEL OF YIELD STRENGTH (G420) fY=4200 KG/CM2.
13. MINIMUM LAP FOR STEEL BAR = 60 CM OR 80 x DIAMETER OF BAR WHICH IS GREATER.

Rev.	Date	Description	Drawn	Checked	Approved
2	24.08.2021	Draft Detailed Design	BM	OB	BA
1	01.08.2021	Draft Detailed Design	BM	OB	BA

Project: Support to Infrastructure Works for Phase II: Jericho Agro-Industrial Park and Deep Water Well Drilling

Contract No.: .....

Subject: Detail Design

Construction of Deep Well and Transmission Pipeline for JAIP
Well Site - Civil
Tank Section Reinforcement Details - III

Designed: Samed Burnat
Drawn: Bahaa Al Mur
Checked: Osama Bazzour
Approved: Bassam Abu Zahra
File Name: JAIP-W-TANK-C.dwg
Date: 24-08-2021
Scale: N.T.S
Size: A1
Drawing No.: JAIP-W-TANK-C-05
Sheet: 026/105
Rev.: 01

مركز الهندسة والتخطيط
center for engineering and planning

Center for Engineering and Planning
Ramallah - Palestine
Al Bireh - Al Medan St. Against Al Watanya Towers
P.O.Box 381

F I N A L
2021-09-19

Donor: من الشعب الياباني
From the People of Japan

Owner: سلطة المياه الفلسطينية
PALESTINIAN WATER AUTHORITY

Operator: بلدية أريحا
Jericho Municipality

Implementing Agency: United Nations Development Programme
Programme of Assistance to the Palestinian People
برنامج الأمم المتحدة الإنمائي برنامج مساعدة الشعب الفلسطيني

This document is the property of Center for Engineering and Planning (CEP) , any duplication or transmission to third parties is forbidden without its prior approval.

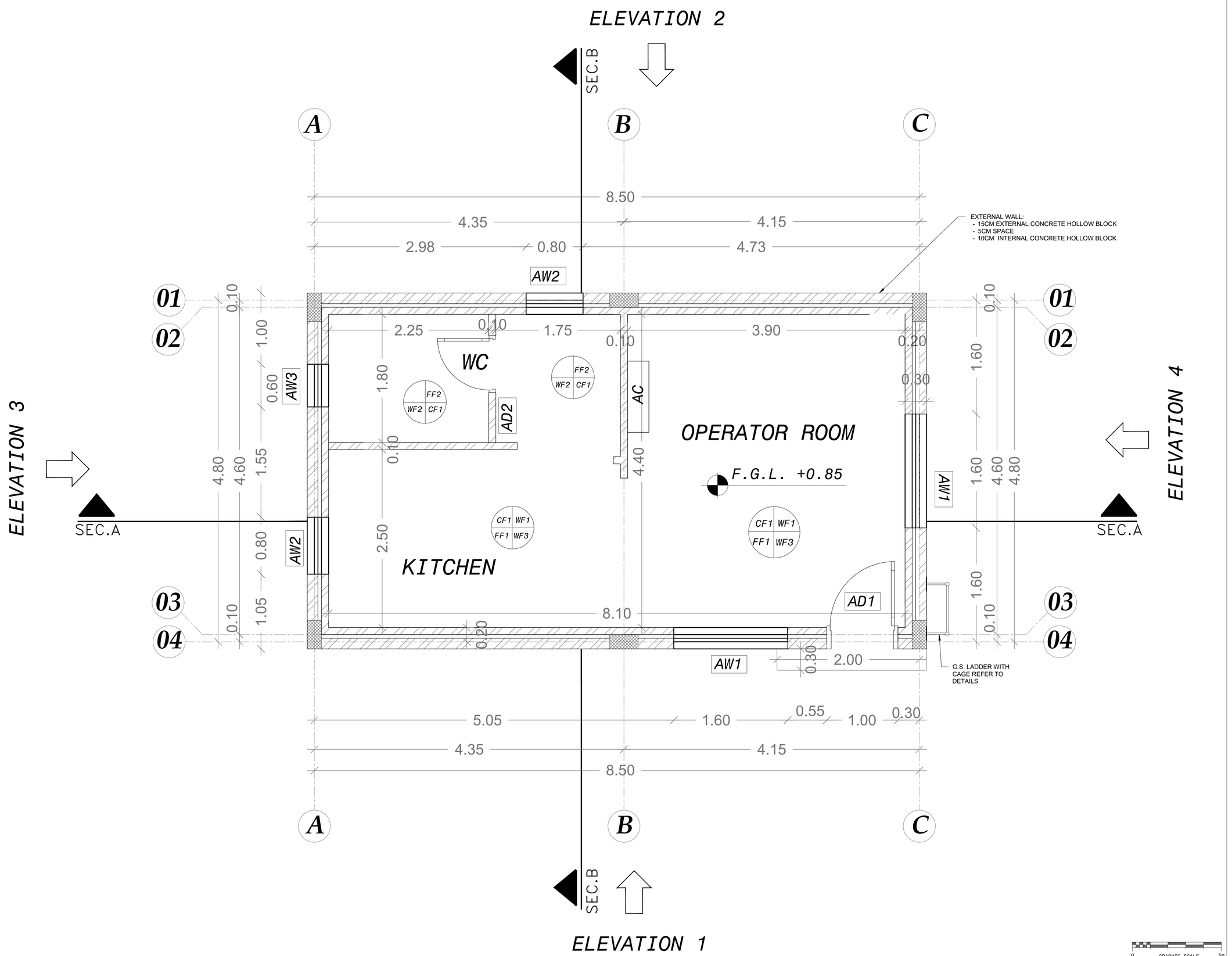

NOTES

1. ALL DIMENSIONS ARE IN METERS. EXCEPT WHERE OTHERWISE SHOWN OR NOTED.
2. IT IS THE CONTRACTOR RESPONSIBILITY TO PREPARE AND SUBMIT WORKSHOP DRAWING FOR ENGINEERS BEFORE START WORKS.
3. WF1 = PLASTER & EMULSION PAINT (SUPERCRYLE) FOR WALLS (OVER 1.5M).
4. WF2 = CERAMIC WALL TILES SIZE 200X200X8mm UP TO THE DOOR LEVEL AND WALL PLASTERING AND EMULSION PAINT (SUPERCRYLE) UP TO THE CEILING.
5. WF3 = PLASTER & EMULSION PAINT (OIL PAINTING) FOR WALLS (FROM PORCELAIN TILE TO 1.5 M HEIGHT).
6. FF1 = PORCELAIN FLOOR TILE SIZE 30X30X2.5cm MARBLE CHIPS.
7. FF2 = NON SLIPPING CERAMIC FLOOR TILES SIZE 200X200X8mm.
8. CF1 = PLASTER & EMULSION PAINT (POLYCEED) FOR CEILING.
9. EXISTING GROUND ELEVATION AT MAIN GATE = -239.75cm = +0.00

Rev.	Date	Description	Drawn	Checked	Approved
2	24.08.2021	Draft Detailed Design	BM	OB	BA
1	01.08.2021	Draft Detailed Design	BM	OB	BA

Project: Support to Infrastructure Works for Phase II: Jericho Agro-Industrial Park and Deep Water Well Drilling

Contract No.: .....

Subject: Detail Design

Construction of Deep Well and Transmission Pipeline for JAIP
Well Site- Architectural
Operator Room - Floor Plan

Designed: Samed Burnat
Drawn: Bahaa Al Mur
Checked: Osama Bazzour
Approved: Bassam Abu Zahra

مركز الهندسة والتخطيط
center for engineering and planning

Center for Engineering and Planning
Ramallah - Palestine
Al Bireh - Al Medan St. Against Al Watanya Towers
P.O.Box 301

File Name: JAIP-WELL-OR-A.dwg
Date: 24-08-2021
Scale: 1 : 25
Size: A1
Drawing No.: JAIP-W-OR-A-01
Sheet: 027/105
Rev.: 01

FINAL
2021-09-19

Donor: From the People of Japan — من الشعب الياباني

Owner: سلطة المياه الفلسطينية — PALESTINIAN WATER AUTHORITY

Operator: بلدية أريحا — Jericho Municipality

Implementing Agency: United Nations Development Programme — Programme d'Assistance au Peuple Palestinien — برنامج الأمم المتحدة الإنمائي، برنامج مساعدة الشعب الفلسطيني — UNDP

This document is the property of Center for Engineering and Planning (CEP), any duplication or transmitted to third parties is forbidden without its prior approval.

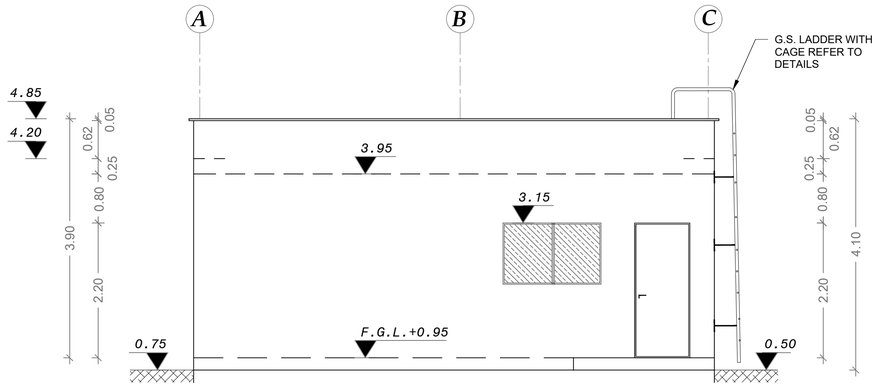

ELEVATION NO.1

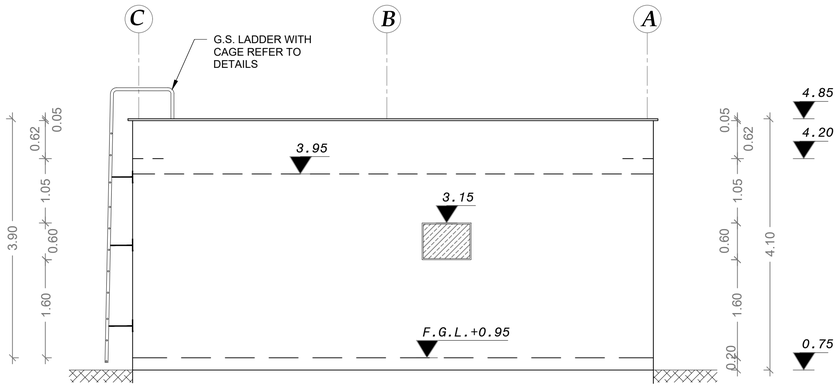

ELEVATION NO.2

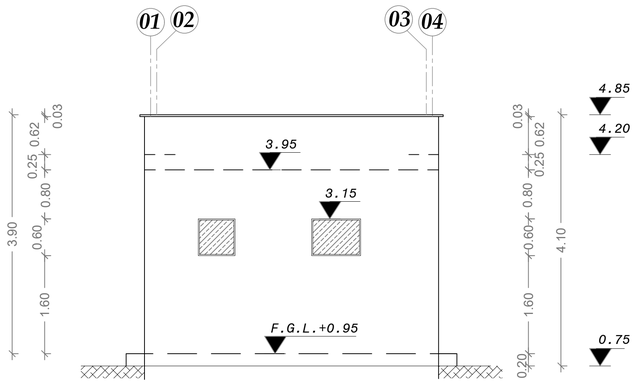

ELEVATION NO.3

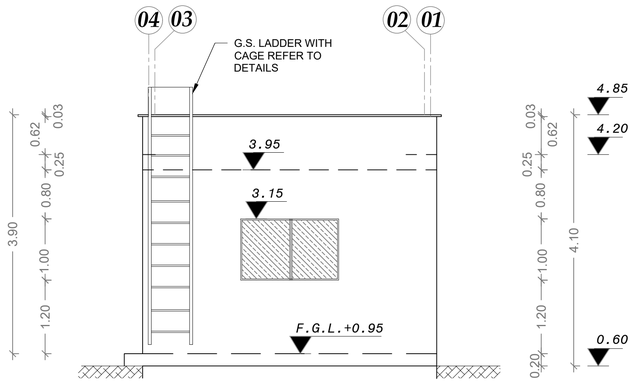

ELEVATION NO. 4

0 GRAPHIC SCALE 5m

* IF PRINTING ON A1- 1:100
* IF PRINTING ON A3- 1:200

NOTES

1. ALL DIMENSIONS ARE IN METERS. EXCEPT WHERE OTHERWISE SHOWN OR NOTED.
2. IT IS THE CONTRACTOR RESPONSIBILITY TO PREPARE AND SUBMIT WORKSHOP DRAWING FOR ENGINEERS BEFORE START WORKS.
3. EXISTING GROUND ELEVATION AT MAIN GATE = -239.75m = +0.00

Rev.	Date	Description	Drawn	Checked	Approved
1	01.08.2021	Draft Detailed Design	BM	OB	BA

Project: Support to Infrastructure Works for Phase II: Jericho Agro-Industrial Park and Deep Water Well Drilling

Contract No.: .....

Subject: Detail Design

Construction of Deep Well and Transmission Pipeline for JAIP
Well Site- Architectural
Operator Room - Elevations

Designed: Samed Burnat
Drawn: Bahaa Al Mur
Checked: Osama Bazzour
Approved: Bassam Abu Zahra
File Name: JAIP-WELL-OR-A.dwg
Date: 24-08-2021
Scale: 1: 50
Size: A1
Drawing No.: JAIP-W-OR-A-02
Sheet: 028/105
Rev.: 01

مركز الهندسة والتخطيط
center for engineering and planning

Center for Engineering and Planning
Ramallah, Palestine
Al Birah - Al Medan St. Against Al Watanya Towers
P.O.Box 301

FINAL
2021-09-19

Donor: من الشعب الياباني
From the People of Japan

Owner: سلطة المياه الفلسطينية
PALESTINIAN WATER AUTHORITY

Operator: بلدية أريحا
Jericho Municipality

Implementing Agency: United Nations Development Programme
Programme of Assistance to the Palestinian People
برنامج الأمم المتحدة الإنمائي برنامج مساعدة شعب فلسطين

This document is the property of Center for Engineering and Planning (CEP) , any duplication or transmitted to third parties is forbidden without its prior approval.

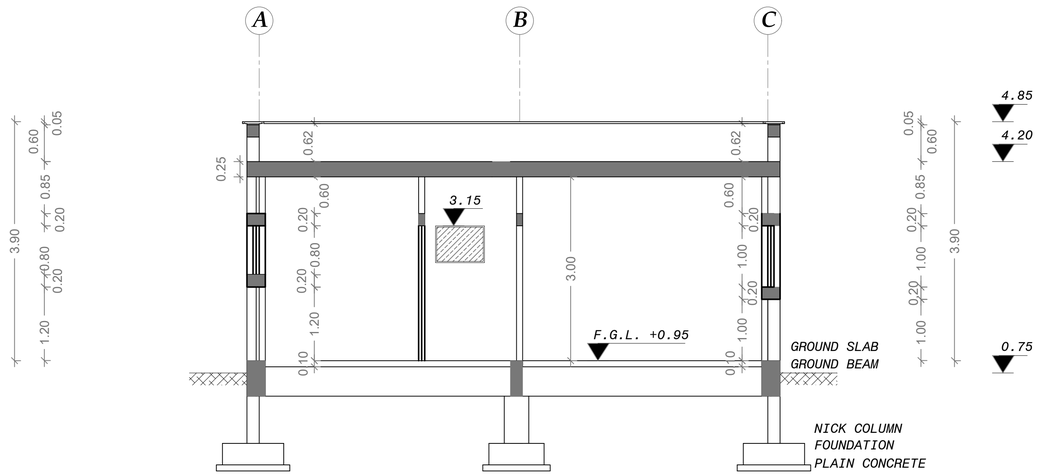

SECTION A-A

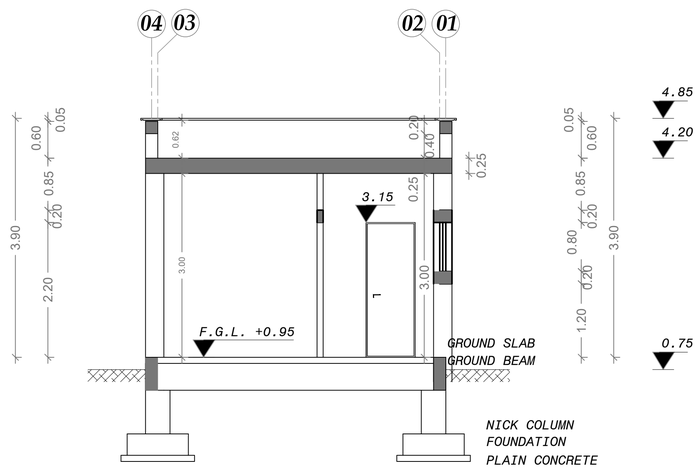

SECTION B-B

0 GRAPHIC SCALE 5m

* IF PRINTING ON A1- 1:100
* IF PRINTING ON A3- 1:200

NOTES

NOTES

1. ALL DIMENSIONS ARE IN METERS. EXCEPT WHERE OTHERWISE SHOWN OR NOTED.
2. IT IS THE CONTRACTOR RESPONSIBILITY TO PREPARE AND SUBMIT WORKSHOP DRAWING FOR ENGINEERS BEFORE START WORKS.

Rev.	Date	Description	Drawn	Checked	Approved
1	01.08.2021	Draft Detailed Design	BM	OB	BA

Project: Support to Infrastructure Works for Phase II: Jericho Agro-Industrial Park and Deep Water Well Drilling

Contract No.: .....

Subject: Detail Design

Construction of Deep Well and Transmission Pipeline for JAIP
Well Site- Architectural
Operator Room - Sections

Designed: Samed Burnat
Drawn: Bahaa Al Mur
Checked: Osama Bazzour
Approved: Bassam Abu Zahra
File Name: JAIP-WELL-OR-A.dwg
Date: 24-08-2021
Scale: 1: 50
Size: A1
Drawing No.: JAIP-W-OR-A-03
Sheet: 029/105
Rev.: 01

مركز الهندسة والتخطيط
center for engineering and planning

Center for Engineering and Planning
Ramallah - Palestine
Al Birah - Al Medan St. Against Al Watanya Towers
P.O.Box 381

FINAL
2021-09-19

Implementing Agency:
United Nations Development Programme
Programme of Assistance to the Palestinian People
برنامج الأمم المتحدة الإنمائي برنامج مساعدة شعب فلسطين

Operator:
Jericho Municipality
بلدية أريحا

Owner:
سلطة المياه الفلسطينية
PALESTINIAN WATER AUTHORITY

Donor:
From the People of Japan
من الشعب الياباني

This document is the property of Center for Engineering and Planning (CEP) , any duplication or transmitted to third parties is forbidden without its prior approval.

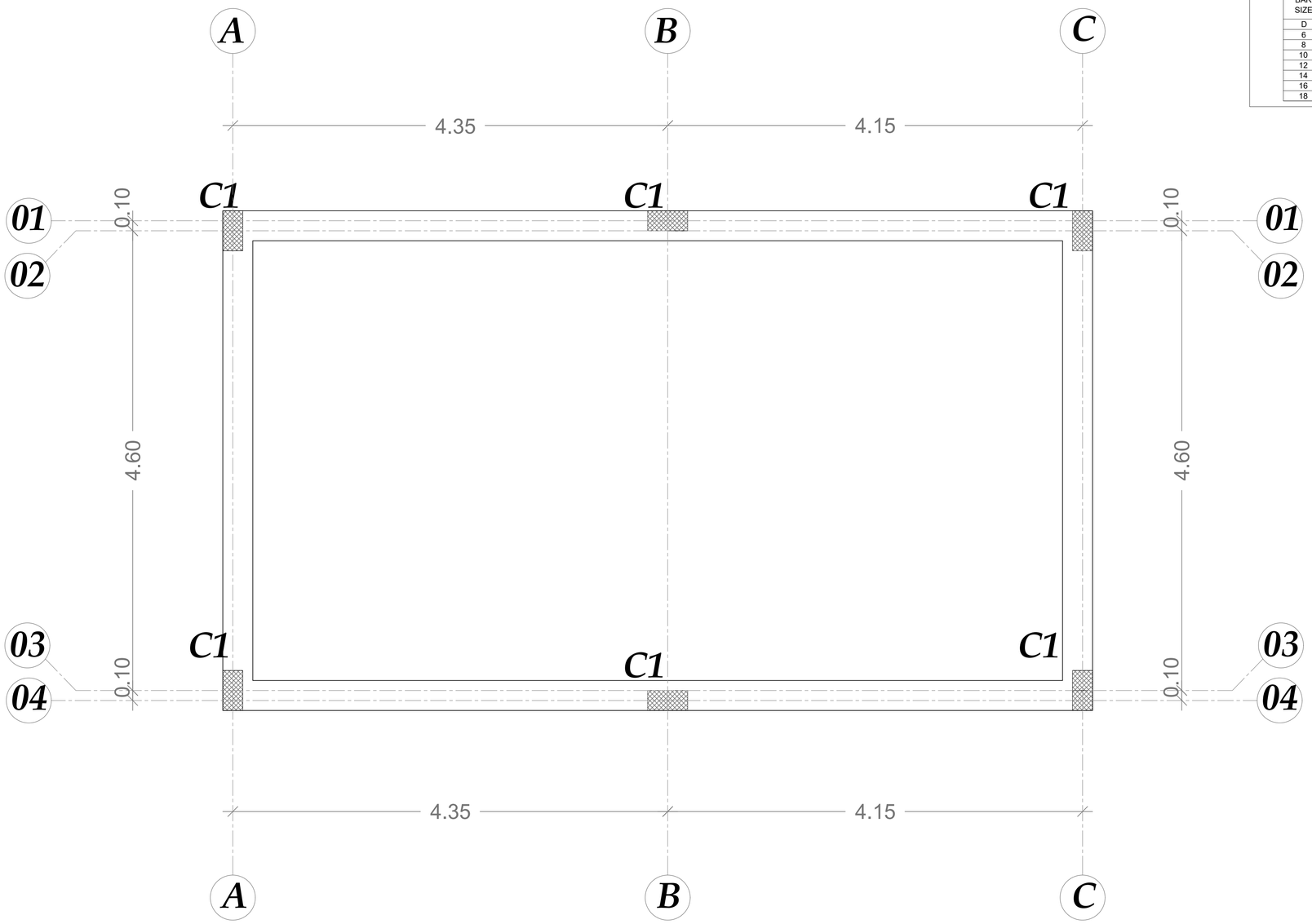

NOTES

10. MIN. LAP FOR STEEL BAR = 60CM OR 50 x DIA. BAR WHICH IS GREATER.
11. FOUND. AND COL. ARE DESIGNED ACCORDING TO ARCH. DRAWINGS.
12. MINIMUM DEPTH OF EXCAVATION IS 1.5M TO THE BOTTOM OF FOUNDATION AND/OR AS PER THE ENGINEER INSTRUCTIONS.
13. BAR CUT OFF POINTS FOR TYPICAL BEAMS IS AS FOLLOWS:

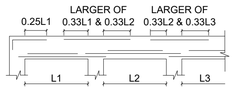

14. FOR OTHER BEAMS .THE CONTRACTOR SHOULD SUBMIT SHOP DRAWING FOR ENGINEER APPROVAL.

BENDS R	HOOKS R
BAR SIZE	GRADE 250 (TYPE & GRADE R)	GRADE 420 (TYPE AND GRADE T)
0	R	R
6	12	18
8	16	24
10	20	30
12	24	36
14	28	42
16	32	48
18	36	54

NOTES

1. ALL DIMENSIONS ARE IN METERS. EXCEPT WHERE OTHERWISE SHOWN OR NOTED.
2. IT IS THE CONTRACTOR RESPONSIBILITY TO PREPARE AND SUBMIT WORKSHOP DRAWING FOR ENGINEERS BEFORE START WORKS.
3. ALL OF THE STRUCTURAL DRAWINGS ARE TO BE READ IN CONJUNCTION WITH THE PERTINENT ARCHITECTURAL, ELECTRICAL, MECHANICAL, CIVIL DEFENSE AND OTHER STRUCTURAL DRAWINGS.
4. IF THERE IS ANY DISCREPANCY IN DRAWINGS. THE CONTRACTOR MUST CONSIDER IT IN HIS PRICE.
5. CONCRETE SURFACE IN CONTACT WITH SOIL SHALL BE PAINTED 1-COAT PRIMER AND 2-COATS OF HOT BITUMEN.
6. DESIGN CODE ACI 318M-14.

NOTES

7. STEEL BARS PROVIDED BY CONTRACTOR (G420) Fy=420 MPA.
8. CONCRETE PROVIDED BY CONTRACTOR FOR COMPRESSIVE STRENGTH AS:
   - FOR COLUMNS B300
   - FOR FOUNDATION & SLABS B300
   - FOR STAIRS B300
   - FOR POST,LINTELS,CANOPIES ALL SECONDARY ELEMENTS B250
   - FOR PLAIN CONCRETE B200
9. STEEL COVERS:
   - FOR FOUNDATIONS (CAST AGAINST SOIL) =7.5 CM
   - (FOR PROTECTED CONCRETE) =5.0 CM
   - FOR COLUMNS =4.0 CM
   - FOR SLABS =2.5 CM
   - FOR BEAMS =4.0 CM

Rev.	Date	Description	Drawn	Checked	Approved
2	24.08.2021	Draft Detailed Design	BM	OB	BA
1	01.08.2021	Draft Detailed Design	BM	OB	BA

Project: Support to Infrastructure Works for Phase II: Jericho Agro-Industrial Park and Deep Water Well Drilling

Contract No.: .....

Subject: Detail Design

Construction of Deep Well and Transmission Pipeline for JAIP
Well Site- Civil
Operator Room - Columns Plan

Designed: Samed Burnat
Drawn: Bahaa Al Mur
Checked: Osama Bazzour
Approved: Bassam Abu Zahra
File Name: JAIP-WELL-OR-C.dwg
Date: 19-09-2021
Scale: 1 : 25
Size: A1
Drawing No.: JAIP-W-OR-C-01
Sheet: 030/105
Rev.: 01

مركز الهندسة والتخطيط
center for engineering and planning

Center for Engineering and Planning
Ramallah - Palestine
Al Birah - Al Medan St. Against Al Watanya Towers
P.O.Box 381

FINAL
2021-09-19

Donor: من الشعب الياباني
From the People of Japan

Owner: سلطة المياه الفلسطينية
PALESTINIAN WATER AUTHORITY

Operator: بلدية أريحا
Jericho Municipality

Implementing Agency: United Nations Development Programme
Programme of Assistance to the Palestinian People
برنامج الأمم المتحدة الإنمائي برنامج مساعدة الشعب الفلسطيني
UNDP

This document is the property of Center for Engineering and Planning (CEP) , any duplication or transmitted to third parties is forbidden without its prior approval.

0 GRAPHIC SCALE 5m
* IF PRINTING ON A1- 1:100
* IF PRINTING ON A3- 1:200

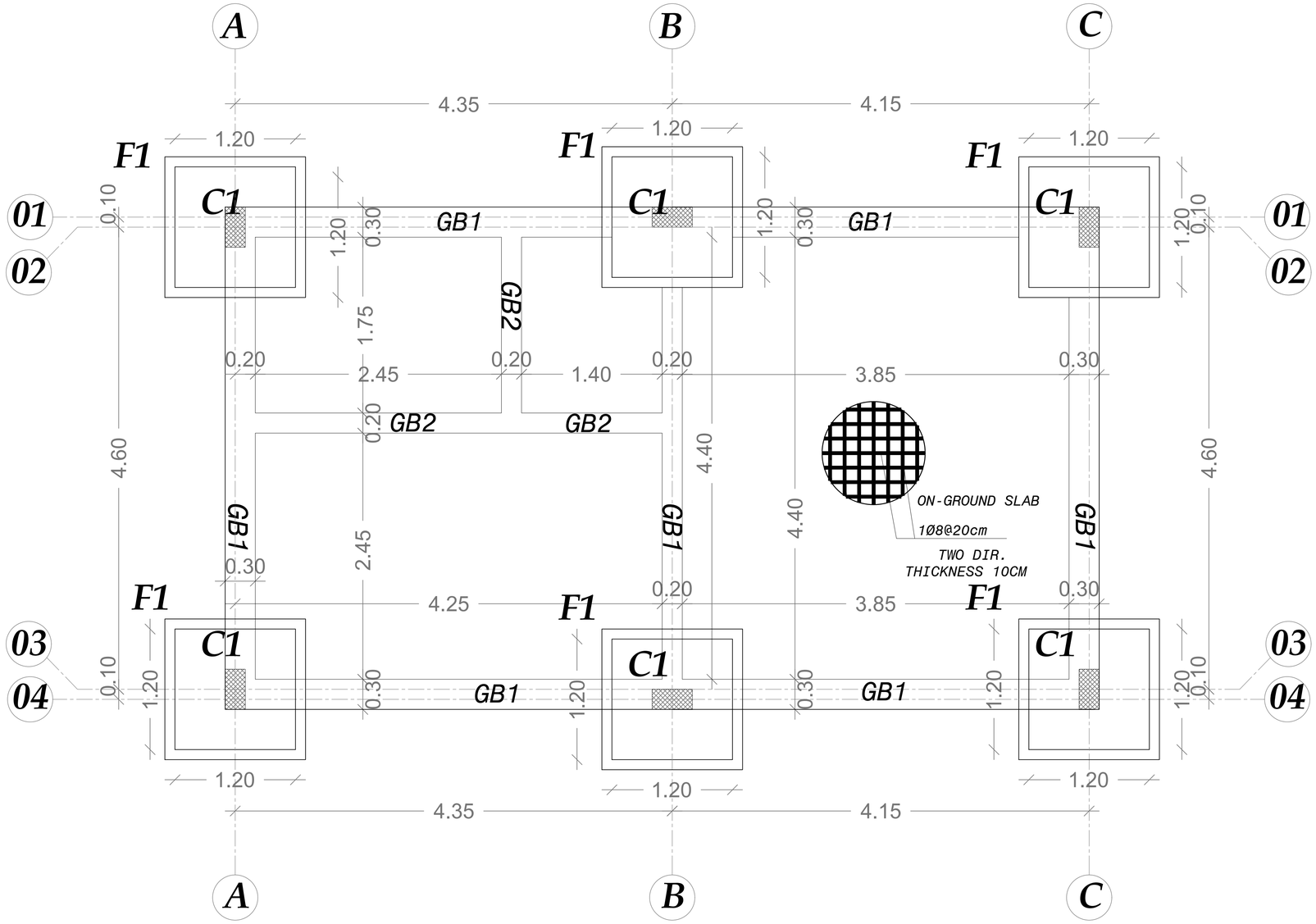

GROUND BEAM PLAN

Scale 1:50

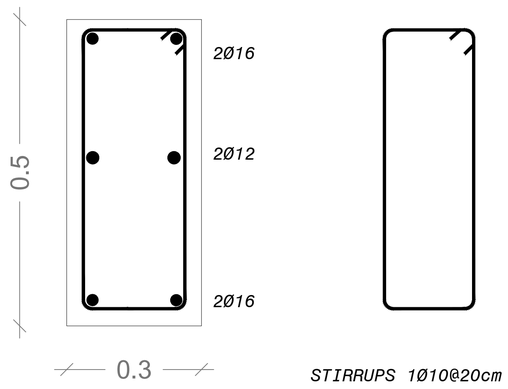

GROUND BEAM DETAILS (GB1)

Scale 1:10

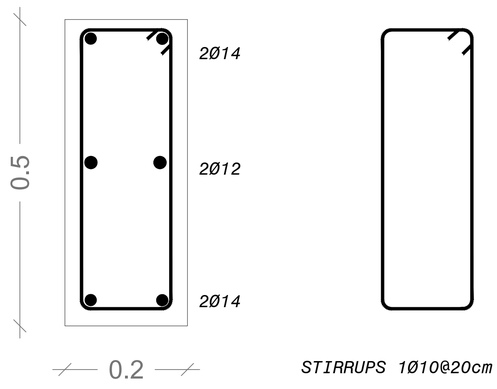

GROUND BEAM DETAILS (GB2)

Scale 1:10

GRAPHIC SCALE 0 5m

* IF PRINTING ON A1- 1:100
* IF PRINTING ON A3- 1:200

NOTES

10. MIN. LAP FOR STEEL BAR = 60CM OR 50 x DIA. BAR WHICH IS GREATER.
11. FOUND. AND COL. ARE DESIGNED ACCORDING TO ARCH. DRAWINGS.
12. MINIMUM DEPTH OF EXCAVATION IS 1.5M TO THE BOTTOM OF FOUNDATION AND/OR AS PER THE ENGINEER INSTRUCTIONS.
13. BAR CUT OFF POINTS FOR TYPICAL BEAMS IS AS FOLLOWS:

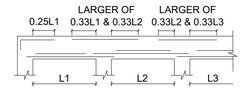

14. FOR OTHER BEAMS .THE CONTRACTOR SHOULD SUBMIT SHOP DRAWING FOR ENGINEER APPROVAL.

BENDS R HOOKS R

BAR SIZE	GRADE 250 (TYPE & GRADE R)	GRADE 420 (TYPE AND GRADE T)
D	R	R
6	12	18
8	16	24
10	20	30
12	24	36
14	28	42
16	32	48
18	36	54

NOTES

1. ALL DIMENSIONS ARE IN METERS. EXCEPT WHERE OTHERWISE SHOWN OR NOTED.
2. IT IS THE CONTRACTOR RESPONSIBILITY TO PREPARE AND SUBMIT WORKSHOP DRAWING FOR ENGINEERS BEFORE START WORKS.
3. ALL OF THE STRUCTURAL DRAWINGS ARE TO BE READ IN CONJUNCTION WITH THE PERTINENT ARCHITECTURAL, ELECTRICAL, MECHANICAL, CIVIL DEFENSE AND OTHER STRUCTURAL DRAWINGS.
4. IF THERE IS ANY DISCREPANCY IN DRAWINGS. THE CONTRACTOR MUST CONSIDER IT IN HIS PRICE.
5. CONCRETE SURFACE IN CONTACT WITH SOIL SHALL BE PAINTED 1-COAT PRIMER AND 2-COATS OF HOT BITUMEN.
6. DESIGN CODE ACI 318M-14.

NOTES

7. STEEL BARS PROVIDED BY CONTRACTOR (G420) Fy=420 MPA.
8. CONCRETE PROVIDED BY CONTRACTOR FOR COMPRESSIVE STRENGTH AS:
   - FOR COLUMNS B300
   - FOR FOUNDATION & SLABS B300
   - FOR STAIRS B300
   - FOR POST,LINTELS,CANOPIES ALL SECONDARY ELEMENTS B250
   - FOR PLAIN CONCRETE B200
9. STEEL COVERS:
   - FOR FOUNDATIONS (CAST AGAINST SOIL) =7.5 CM
   - (FOR PROTECTED CONCRETE) =5.0 CM
   - FOR COLUMNS =4.0 CM
   - FOR SLABS =2.5 CM
   - FOR BEAMS =4.0 CM

Rev.	Date	Description	Drawn	Checked	Approved
2	24.08.2021	Draft Detailed Design	BM	OB	BA
1	01.08.2021	Draft Detailed Design	BM	OB	BA

Project: Support to Infrastructure Works for Phase II: Jericho Agro-Industrial Park and Deep Water Well Drilling

Contract No. .....

Subject: Detail Design

Construction of Deep Well and Transmission Pipeline for JAIP
Well Site- Civil
Operator Room - Footings Plan

Designed: Samed Burnat
Drawn: Bahaa Al Mur
Checked: Osama Bazzour
Approved: Bassam Abu Zahra
File Name: JAIP-WELL-OR-C.dwg
Date: 19-09-2021
Scale: 1: 25
Size: A1
Drawing No.: JAIP-W-OR-C-02
Sheet: 031/105
Rev.: 01

مركز الهندسة والتخطيط
center for engineering and planning

FINAL
2021-09-19

Center for Engineering and Planning
Ramallah, Palestine
Al Bireh - Al Medan St. Against Al Watanya Towers
P.O.Box 301

Donor: من الشعب الياباني From the People of Japan

Owner: سلطة المياه الفلسطينية Palestinian water authority

Operator: بلدية أريحا Jericho Municipality

Implementing Agency: United Nations Development Programme
Programme of Assistance to the Palestinian People
برنامج الأمم المتحدة الإنمائي برنامج مساعدة الشعب الفلسطيني
UNDP

This document is the property of Center for Engineering and Planning (CEP), - any duplication or transmition to third parties is forbidden without its prior approval.

Table of Footings (ISOLATED)

Footing		Total	Footings size			Reinforcement		
FOOT.NAME	FOOT.NO.		L(cm)	W(cm)	h(cm)	LONG DIR.	SHORT DIR.	Shape
F1	6	6	120	120	50	1Ø12@15cm	1Ø12@15cm	20 L OR W -10cm 20

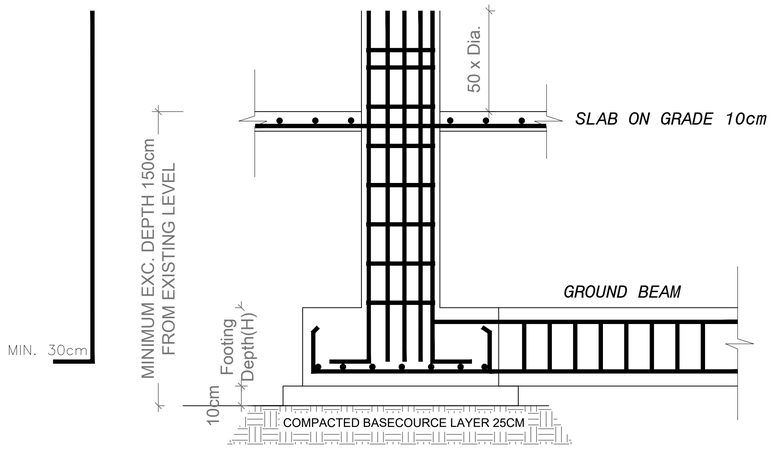

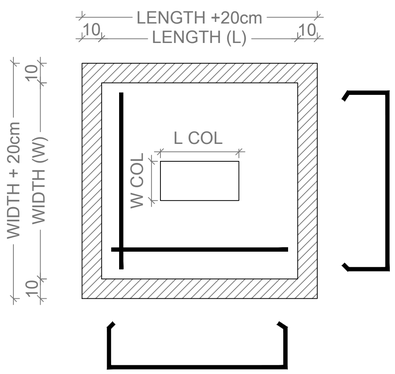

TYPICAL DETAILS FOR ISOLATED FOOTING

FOOTING DETAILS

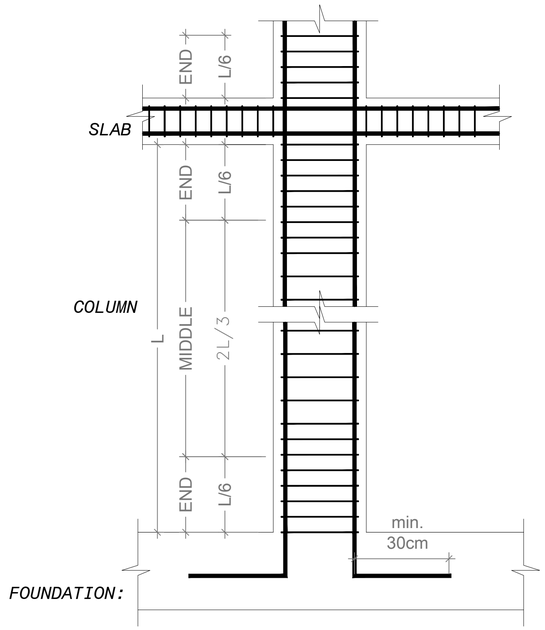

TYPICAL DETAILS FOR
COLUMN STIRRUP SPACING

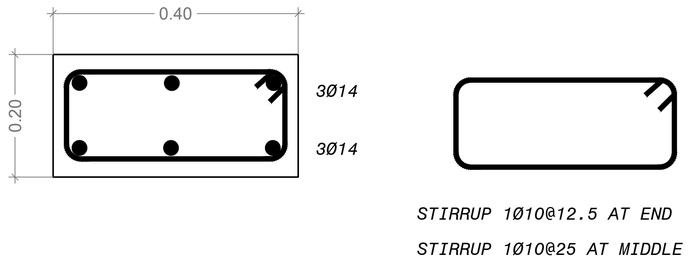

COLUMN DETAILS
FOR All COLUMNS.
Scale 1:5

COLUMN DETAILS

NOTES

10. MIN. LAP FOR STEEL BAR = 60CM OR 50 x DIA. BAR WHICH IS GREATER.
11. FOUND. AND COL. ARE DESIGNED ACCORDING TO ARCH. DRAWINGS.
12. MINIMUM DEPTH OF EXCAVATION IS 1.5M TO THE BOTTOM OF FOUNDATION AND/OR AS PER THE ENGINEER INSTRUCTIONS.
13. BAR CUT OFF POINTS FOR TYPICAL BEAMS IS AS FOLLOWS:

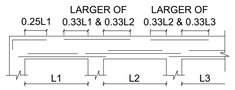

14. FOR OTHER BEAMS .THE CONTRACTOR SHOULD SUBMIT SHOP DRAWING FOR ENGINEER APPROVAL.

BENDS R HOOKS R

BAR SIZE	GRADE 250 (TYPE & GRADE R)	GRADE 420 (TYPE AND GRADE T)
D	R	R
6	12	18
8	16	24
10	20	30
12	24	36
14	28	42
16	32	48
18	36	54

NOTES

1. ALL DIMENSIONS ARE IN METERS. EXCEPT WHERE OTHERWISE SHOWN OR NOTED.
2. IT IS THE CONTRACTOR RESPONSIBILITY TO PREPARE AND SUBMIT WORKSHOP DRAWING FOR ENGINEERS BEFORE START WORKS.
3. ALL OF THE STRUCTURAL DRAWINGS ARE TO BE READ IN CONJUNCTION WITH THE PERTINENT ARCHITECTURAL, ELECTRICAL, MECHANICAL, CIVIL DEFENSE AND OTHER STRUCTURAL DRAWINGS.
4. IF THERE IS ANY DISCREPANCY IN DRAWINGS. THE CONTRACTOR MUST CONSIDER IT IN HIS PRICE.
5. CONCRETE SURFACE IN CONTACT WITH SOIL SHALL BE PAINTED 1-COAT PRIMER AND 2-COATS OF HOT BITUMEN.
6. DESIGN CODE ACI 318M-14.
7. STEEL BARS PROVIDED BY CONTRACTOR (G420) Fy=420 MPA.
8. CONCRETE PROVIDED BY CONTRACTOR FOR COMPRESSIVE STRENGTH AS:
   - FOR COLUMNS B300
   - FOR FOUNDATION & SLABS B300
   - FOR STAIRS B300
   - FOR POST,LINTELS,CANOPIES ALL SECONDARY ELEMENTS B250
   - FOR PLAIN CONCRETE B200
9. STEEL COVERS:
   - FOR FOUNDATIONS (CAST AGAINST SOIL) =7.5 CM
   - (FOR PROTECTED CONCRETE) =5.0 CM
   - FOR COLUMNS =4.0 CM
   - FOR SLABS =2.5 CM
   - FOR BEAMS =4.0 CM

Rev.	Date	Description	Drawn	Checked	Approved
2	24.08.2021	Draft Detailed Design	BM	OB	BA
1	01.08.2021	Draft Detailed Design	BM	OB	BA

Project: Support to Infrastructure Works for Phase II: Jericho Agro-Industrial Park and Deep Water Well Drilling

Contract No. .....

Subject: Detail Design

Construction of Deep Well and Transmission Pipeline for JAIP
Well Site- Civil
Operator Room - Columns and Footings Details

Designed: Sameed Burnat
Drawn: Bahaa Al Mur
Checked: Osama Bazzour
Approved: Bassam Abu Zahra
File Name: JAIP-WELL-OR-C.dwg
Date: 19-09-2021
Scale: 1: 50
Size: A1
Drawing No.: JAIP-W-OR-C-03
Sheet: 032/105
Rev.: 01

مركز الهندسة والتخطيط
center for engineering and planning

Center for Engineering and Planning
Ramallah, Palestine
Al Bireh - Al Medan St. Against Al Watanya Towers
P.O.Box 301

FINAL
2021-09-19

Donor: من الشعب الياباني From the People of Japan

Owner: سلطة المياه الفلسطينية PALESTINIAN WATER AUTHORITY

Operator: بلدية أريحا Jericho Municipality

Implementing Agency: United Nations Development Programme
Programme of Assistance to the Palestinian People
برنامج الأمم المتحدة الإنمائي برنامج مساعدة الشعب الفلسطيني
UNDP

This document is the property of Center for Engineering and Planning (CEP), - any duplication or transmission to third parties is forbidden without its prior approval.

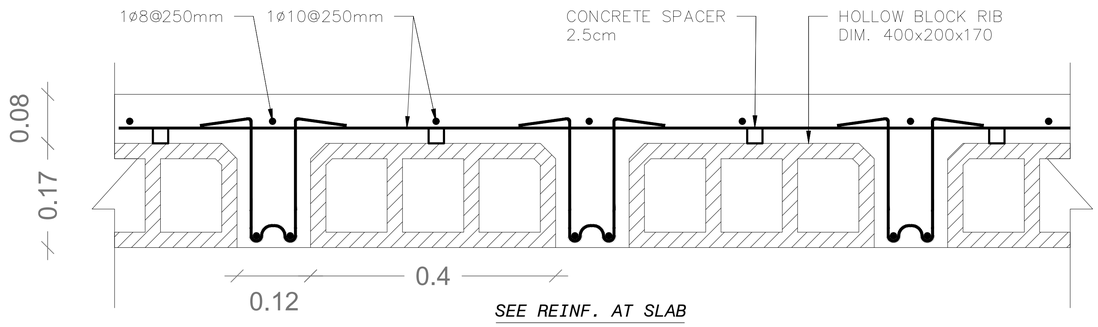

SECTION DETAIL FOR RIBS

SCALE 1:10

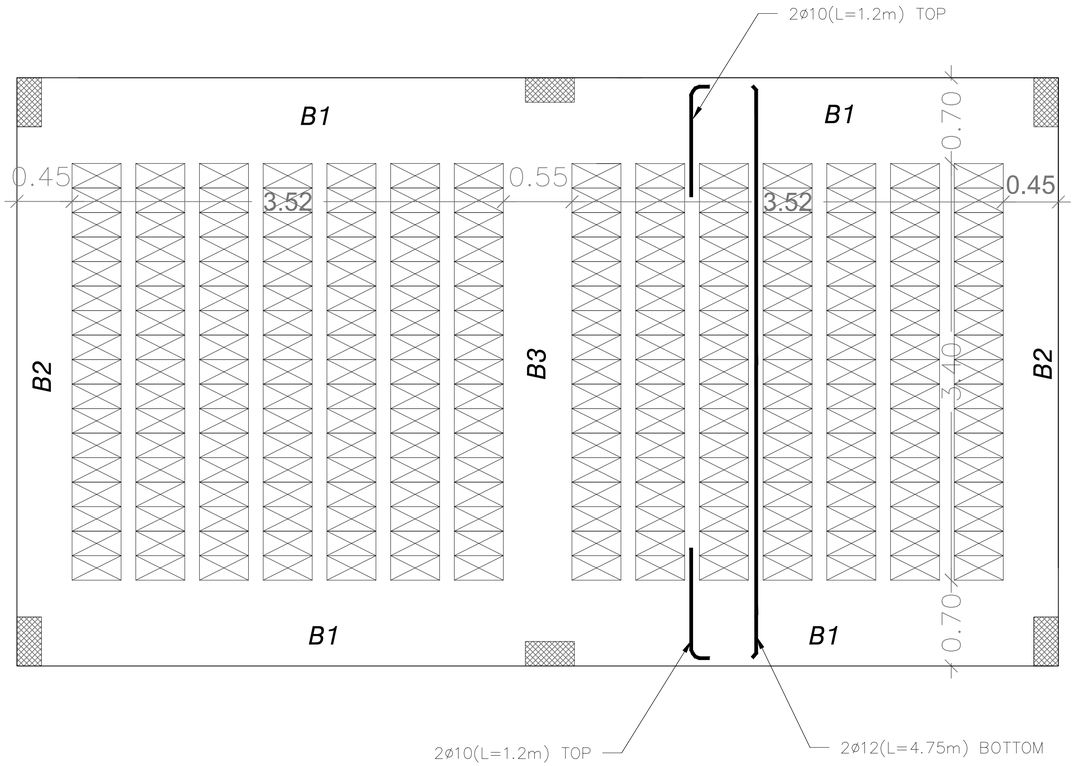

REINF. FOR GUARD ROOM SLAB

SCALE 1:50

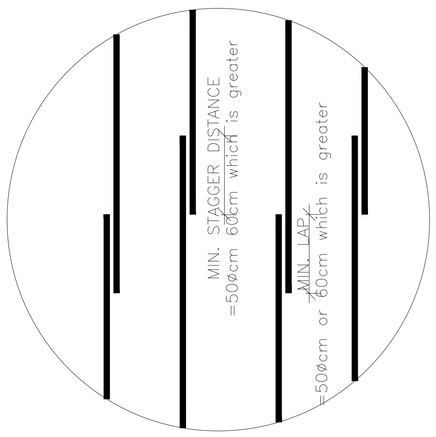

TYPICAL STAGGERING REINFORCEMENT DETAILS

NOTES

10. MIN. LAP FOR STEEL BAR = 60CM OR 50 x DIA. BAR WHICH IS GREATER.
11. FOUND. AND COL. ARE DESIGNED ACCORDING TO ARCH. DRAWINGS.
12. MINIMUM DEPTH OF EXCAVATION IS 1.5M TO THE BOTTOM OF FOUNDATION AND/OR AS PER THE ENGINEER INSTRUCTIONS.
13. BAR CUT OFF POINTS FOR TYPICAL BEAMS IS AS FOLLOWS:

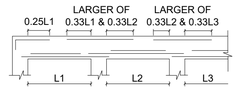

14. FOR OTHER BEAMS .THE CONTRACTOR SHOULD SUBMIT SHOP DRAWING FOR ENGINEER APPROVAL.

BENDS R — HOOKS R

BAR SIZE	GRADE 250 (TYPE & GRADE R)	GRADE 420 (TYPE AND GRADE T)
D	R	R
6	12	18
8	16	24
10	20	30
12	24	36
14	28	42
16	32	48
18	36	54

NOTES

7. STEEL BARS PROVIDED BY CONTRACTOR (G420) Fy=420 MPA.
8. CONCRETE PROVIDED BY CONTRACTOR FOR COMPRESSIVE STRENGTH AS:
   - FOR COLUMNS B300
   - FOR FOUNDATION & SLABS B300
   - FOR STAIRS B300
   - FOR POST,LINTELS,CANOPIES ALL SECONDARY ELEMENTS B250
   - FOR PLAIN CONCRETE B200
9. STEEL COVERS:
   - FOR FOUNDATIONS (CAST AGAINST SOIL) =7.5 CM
   - (FOR PROTECTED CONCRETE) =5.0 CM
   - FOR COLUMNS =4.0 CM
   - FOR SLABS =2.5 CM
   - FOR BEAMS =4.0 CM

NOTES

1. ALL DIMENSIONS ARE IN METERS. EXCEPT WHERE OTHERWISE SHOWN OR NOTED.
2. IT IS THE CONTRACTOR RESPONSIBILITY TO PREPARE AND SUBMIT WORKSHOP DRAWING FOR ENGINEERS BEFORE START WORKS.
3. ALL OF THE STRUCTURAL DRAWINGS ARE TO BE READ IN CONJUNCTION WITH THE PERTINENT ARCHITECTURAL, ELECTRICAL, MECHANICAL, CIVIL DEFENSE AND OTHER STRUCTURAL DRAWINGS.
4. IF THERE IS ANY DISCREPANCY IN DRAWINGS. THE CONTRACTOR MUST CONSIDER IT IN HIS PRICE.
5. CONCRETE SURFACE IN CONTACT WITH SOIL SHALL BE PAINTED 1-COAT PRIMER AND 2-COATS OF HOT BITUMEN.
6. DESIGN CODE ACI 318M-14.

Rev.	Date	Description	Drawn	Checked	Approved
2	24.08.2021	Draft Detailed Design	BM	OB	BA
1	01.08.2021	Draft Detailed Design	BM	OB	BA

Project: Support to Infrastructure Works for Phase II: Jericho Agro-Industrial Park and Deep Water Well Drilling

Contract No.: .....

Subject: Detail Design

Construction of Deep Well and Transmission Pipeline for JAIP
Well Site- Civil
Operator Room - Reinforcement Slab - I

Designed: Samed Burnat
Drawn: Bahaa Al Mur
Checked: Osama Bazzour
Approved: Bassam Abu Zahra
File Name: JAIP-WELL-OR-C.dwg
Date: 19-09-2021
Scale: 1: 25
Size: A1
Drawing No.: JAIP-W-OR-C-04
Sheet: 033/105
Rev.: 01

مركز الهندسة والتخطيط
center for engineering and planning

Center for Engineering and Planning
Ramallah, Palestine
Al Bireh - Al Medan St. Against Al Watanya Towers
P.O.Box 301

FINAL
2021-09-19

Donor: من الشعب الياباني From the People of Japan

Owner: سلطة المياه الفلسطينية PALESTINIAN WATER AUTHORITY

Operator: بلدية أريحا Jericho Municipality

Implementing Agency: United Nations Development Programme
Programme of Assistance to the Palestinian People
برنامج الأمم المتحدة الإنمائي برنامج مساعدة الشعب الفلسطيني

This document is the property of Center for Engineering and Planning (CEP) , any duplication or transmition to third parties is forbidden without its prior approval.

0 GRAPHIC SCALE 5m
* IF PRINTING ON A1- 1:100
* IF PRINTING ON A3- 1:200

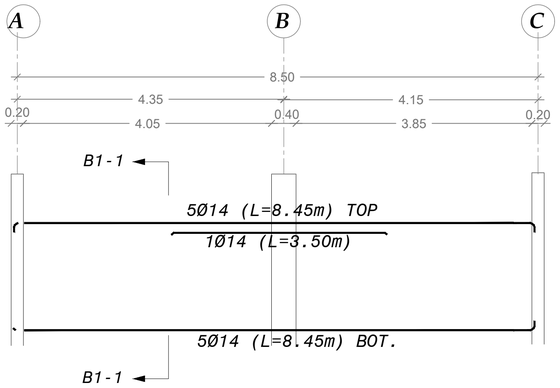

REINF. FOR BEAM NO. 1 (B1)

SCALE: 1:50

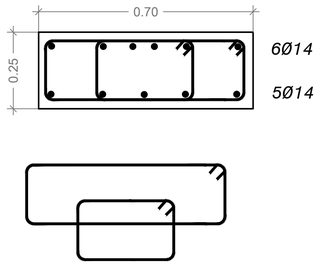

STIRRUPS 2Ø10@20cm

SECTION: B1-1

SCALE: 1:10

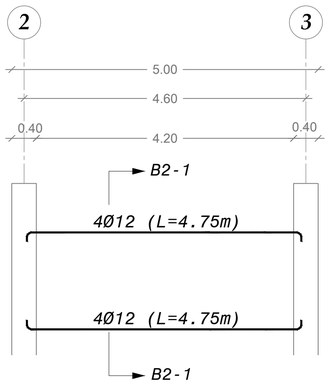

REINF. FOR BEAM NO. 2 (B2)

SCALE: 1:50

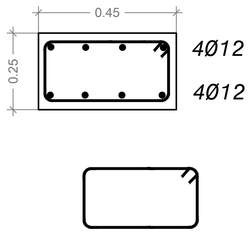

STIRRUPS 1Ø10@20cm

SECTION: B2-1

SCALE: 1:10

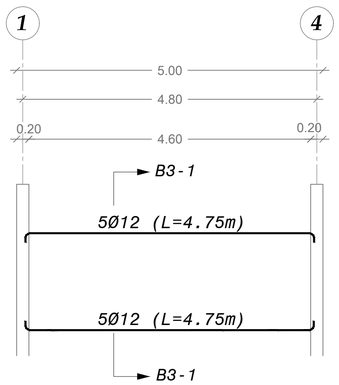

REINF. FOR BEAM NO. 3 (B3)

SCALE: 1:50

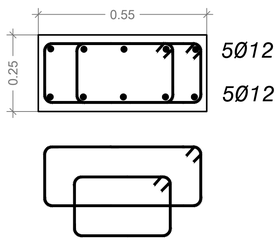

STIRRUPS 2Ø10@20cm

SECTION: B3-1

SCALE: 1:10

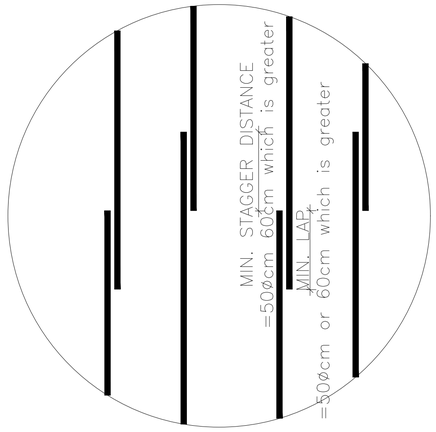

TYPICAL STAGGERING REINFORCEMENT DETAILS

NOTES

10. MIN. LAP FOR STEEL BAR = 60CM OR 50 x DIA. BAR WHICH IS GREATER.
11. FOUND. AND COL. ARE DESIGNED ACCORDING TO ARCH. DRAWINGS.
12. MINIMUM DEPTH OF EXCAVATION IS 1.5M TO THE BOTTOM OF FOUNDATION AND/OR AS PER THE ENGINEER INSTRUCTIONS.
13. BAR CUT OFF POINTS FOR TYPICAL BEAMS IS AS FOLLOWS:

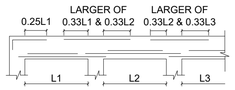

14. FOR OTHER BEAMS .THE CONTRACTOR SHOULD SUBMIT SHOP DRAWING FOR ENGINEER APPROVAL.

BENDS R — HOOKS R

BAR SIZE	GRADE 250 (TYPE & GRADE R)	GRADE 420 (TYPE AND GRADE T)
D	R	R
6	12	18
8	16	24
10	20	30
12	24	36
14	28	42
16	32	48
18	36	54

NOTES

1. ALL DIMENSIONS ARE IN METERS. EXCEPT WHERE OTHERWISE SHOWN OR NOTED.
2. IT IS THE CONTRACTOR RESPONSIBILITY TO PREPARE AND SUBMIT WORKSHOP DRAWING FOR ENGINEERS BEFORE START WORKS.
3. ALL OF THE STRUCTURAL DRAWINGS ARE TO BE READ IN CONJUNCTION WITH THE PERTINENT ARCHITECTURAL, ELECTRICAL, MECHANICAL, CIVIL DEFENSE AND OTHER STRUCTURAL DRAWINGS.
4. IF THERE IS ANY DISCREPANCY IN DRAWINGS. THE CONTRACTOR MUST CONSIDER IT IN HIS PRICE.
5. CONCRETE SURFACE IN CONTACT WITH SOIL SHALL BE PAINTED 1-COAT PRIMER AND 2-COATS OF HOT BITUMEN.
6. DESIGN CODE ACI 318M-14.

NOTES

7. STEEL BARS PROVIDED BY CONTRACTOR (G420) Fy=420 MPA.
8. CONCRETE PROVIDED BY CONTRACTOR FOR COMPRESSIVE STRENGTH AS:
   - FOR COLUMNS B300
   - FOR FOUNDATION & SLABS B300
   - FOR STAIRS B300
   - FOR POST,LINTELS,CANOPIES ALL SECONDARY ELEMENTS B250
   - FOR PLAIN CONCRETE B200
9. STEEL COVERS:
   - FOR FOUNDATIONS (CAST AGAINST SOIL) =7.5 CM
   - (FOR PROTECTED CONCRETE) =5.0 CM
   - FOR COLUMNS =4.0 CM
   - FOR SLABS =2.5 CM
   - FOR BEAMS =4.0 CM

Rev.	Date	Description	Drawn	Checked	Approved
2	24.08.2021	Draft Detailed Design	BM	OB	BA
1	01.08.2021	Draft Detailed Design	BM	OB	BA

Project: Support to Infrastructure Works for Phase II: Jericho Agro-Industrial Park and Deep Water Well Drilling

Contract No.: .....

Subject: Detail Design

Construction of Deep Well and Transmission Pipeline for JAIP Well Site- Civil
Operator Room - Reinforcement Slab - II

Designed: Samed Burnat
Drawn: Bahaa Al Mur
Checked: Osama Bazzour
Approved: Bassam Abu Zahra
File Name: JAIP-WELL-OR-C.dwg
Date: 19-09-2021
Scale: 1:50
Size: A1
Drawing No.: JAIP-W-OR-C-05
Sheet: 034/105
Rev.: 01

مركز الهندسة والتخطيط
center for engineering and planning

FINAL
2021-09-19

Center for Engineering and Planning
Ramallah - Palestine
Al Bireh - Al Medan St. Against Al Watanya Towers
P.O.Box 301

Donor: من الشعب الياباني From the People of Japan

Owner: سلطة المياه الفلسطينية Palestinian Water Authority

Jericho Municipality

Implementing Agency: United Nations Development Programme
Programme of Assistance to the Palestinian People
برنامج الأمم المتحدة الإنمائي برنامج مساعدة الشعب الفلسطيني

This document is the property of Center for Engineering and Planning (CEP), any duplication or transmition to third parties is forbidden without its prior approval.

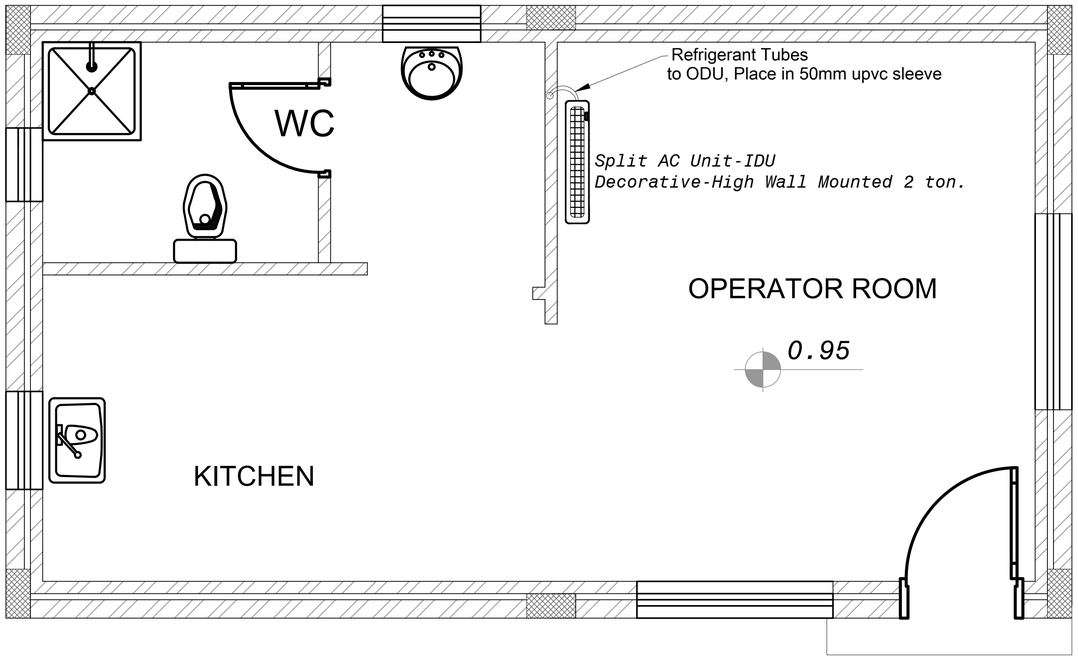

OPERATOR ROOM- AIR CONDITIONING PLAN

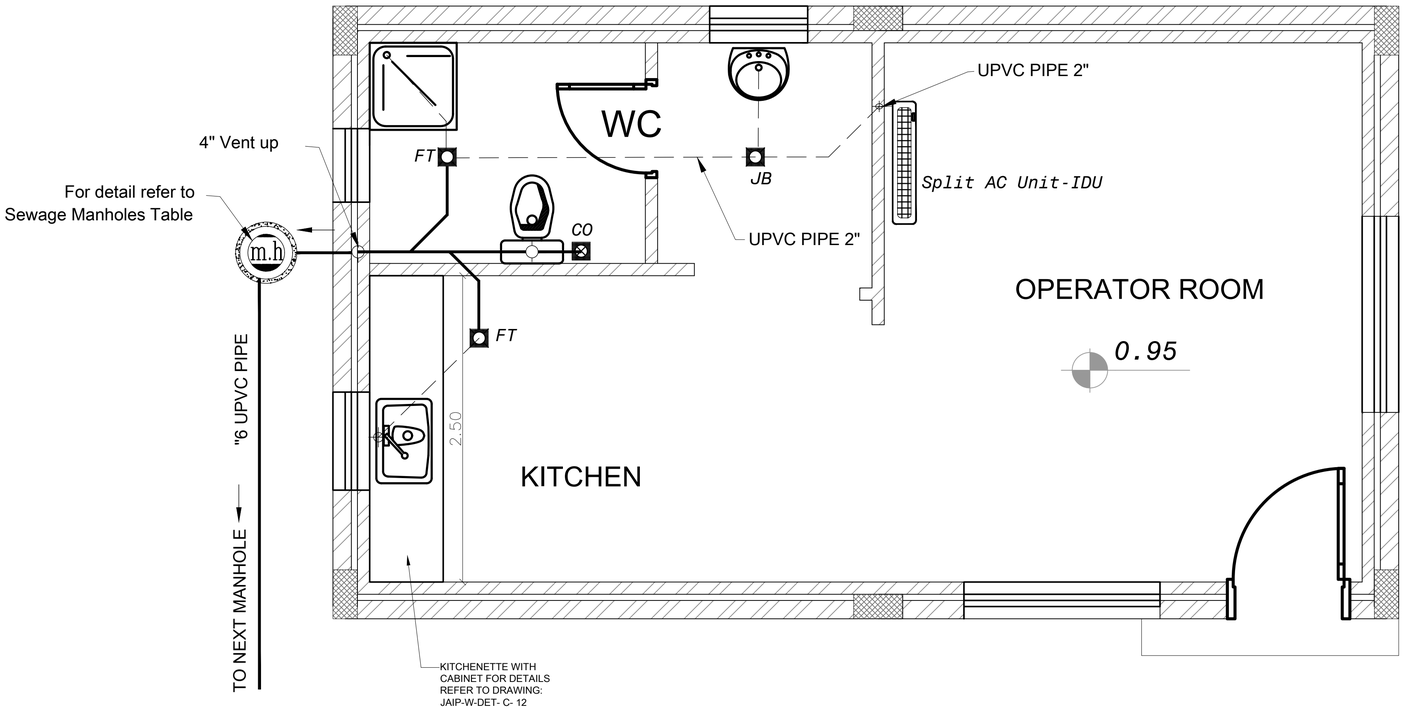

OPERATOR ROOM- DRAINAGE PLAN

0 GRAPHIC SCALE 5m

* IF PRINTING ON A1- 1:100
* IF PRINTING ON A3- 1:200

NOTES

1. ALL DIMENSIONS ARE IN METERS. EXCEPT WHERE OTHERWISE SHOWN OR NOTED.
2. CONTRACTOR SHALL SUBMIT THE MANUFACTURES, CATALOGS, DIMENSIONS, DETAILS AND CONNECTIONS FOR ALL MECHANICAL WORKS THAT SHOULD BE COMPATIBLE WITH THE SIZE OF BUILDING AND CHAMBERS.
3. CONTRACTOR SHALL SUBMIT SHOP DRAWINGS FOR ALL MECHANICAL WORKS, STEEL PARTS & CONNECTIONS FOR ENGINEERS APPROVAL.
4. IF THERE IS ANY DISCREPANCY IN DRAWINGS, THE CONTRACTOR MUST CONSIDER IT IN HIS PRICE.

LEGENDS

110mm (4") UPVC PIPE.
50mm (2") UPVC PIPE.
FT: 4" Floor Trap.
CO: 4" Clean Out.
JB: 4"/2" Joint Box.
IDU A/C INDOOR UNIT.
ODU A/C OUTDOOR UNIT.

Rev.	Date	Description	Drawn	Checked	Approved
2	24.08.2021	Draft Detailed Design	BM	OB	BA
1	01.08.2021	Draft Detailed Design	BM	OB	BA

Project: Support to Infrastructure Works for Phase II: Jericho Agro-Industrial Park and Deep Water Well Drilling

Contract No.: .....

Subject: Detail Design

Construction of Deep Well and Transmission Pipeline for JAIP
Well Site- Mechanical
Operator Room: Air Conditioning and Drainage Plans

Designed: Samed Burnat
Drawn: Bahaa Al Mur
Checked: Osama Bazzour
Approved: Bassam Abu Zahra
File Name: JAIP-WELL-OR-M.dwg
Date: 20-09-2021
Scale: 1: 25
Size: A1
Drawing No.: JAIP-W-OR-M-01
Sheet: 035/105
Rev.: 01

مركز الهندسة والتخطيط
center for engineering and planning

Center for Engineering and Planning
Ramallah - Palestine
Al Birah - Al Medan St. Against Al Watanya Towers
P.O.Box 381

F I N A L
2021-09-19

Donor: من الشعب الياباني
From the People of Japan

Owner: سلطة المياه الفلسطينية
PALESTINIAN WATER AUTHORITY

Operator: بلدية أريحا
Jericho Municipality

Implementing Agency: United Nations Development Programme
Programme of Assistance to the Palestinian People
برنامج الأمم المتحدة الإنمائي برنامج مساعدة الشعب الفلسطيني

This document is the property of Center for Engineering and Planning (CEP) , any duplication or transmitted to third parties is forbidden without its prior approval.

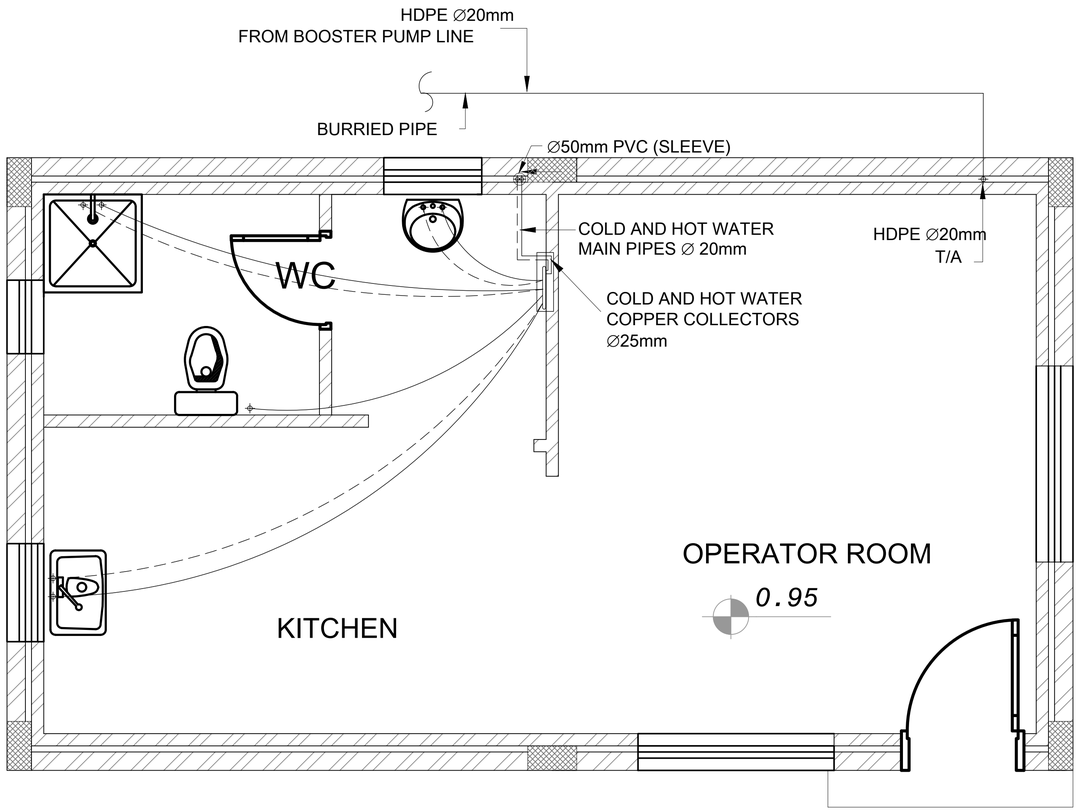

OPERATOR ROOM- WATER SANITARY PLAN

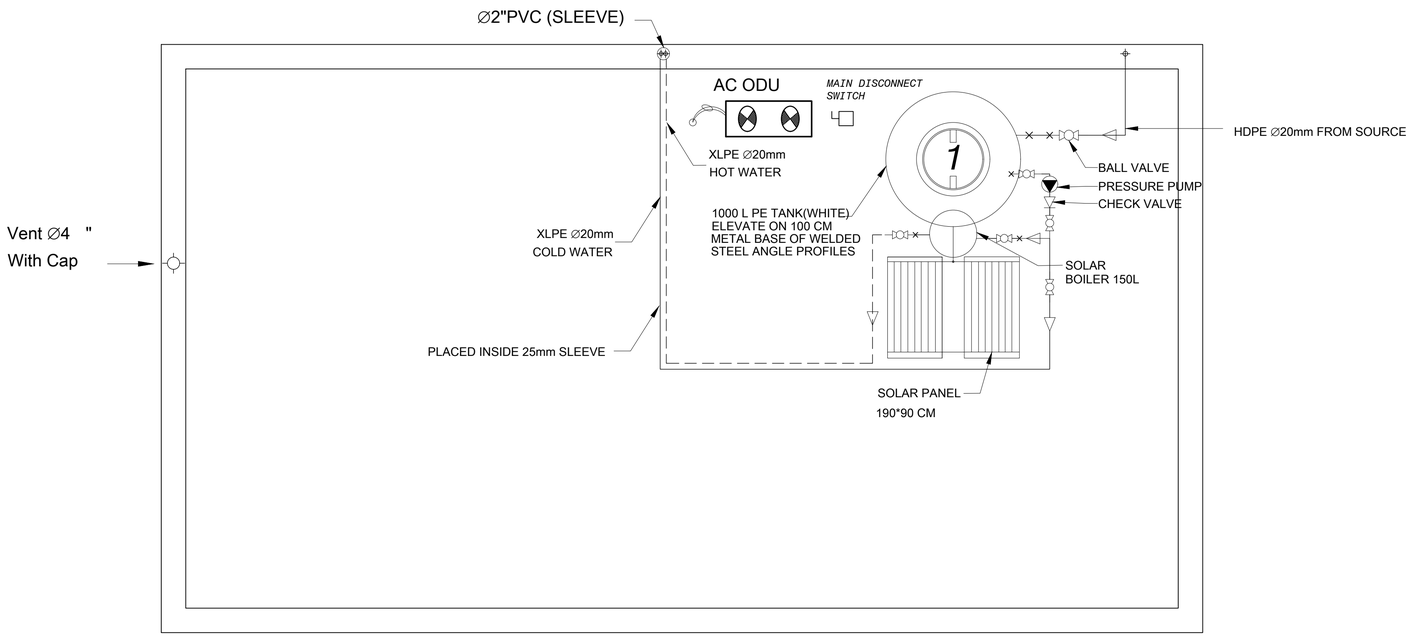

ROOF OPERATOR ROOM-MECHANICAL PLAN

0 GRAPHIC SCALE 5m

* IF PRINTING ON A1- 1:100
* IF PRINTING ON A3- 1:200

NOTES

1. ALL DIMENSIONS ARE IN METERS. EXCEPT WHERE OTHERWISE SHOWN OR NOTED.
2. CONTRACTOR SHALL SUBMIT THE MANUFACTURES, CATALOGS, DIMENSIONS, DETAILS AND CONNECTIONS FOR ALL MECHANICAL WORKS THAT SHOULD BE COMPATIBLE WITH THE SIZE OF BUILDING AND CHAMBERS.
3. CONTRACTOR SHALL SUBMIT SHOP DRAWINGS FOR ALL MECHANICAL WORKS, STEEL PARTS & CONNECTIONS FOR ENGINEERS APPROVAL.
4. IF THERE IS ANY DISCREPANCY IN DRAWINGS, THE CONTRACTOR MUST CONSIDER IT IN HIS PRICE.
5. XLPE PIPE ON ROOF TO BE PLACED INSIDE PE CONDUITS 25 MM.

LEGENDS

———	XLPE PIPE , COLD WATER.
— — —	XLPE PIPE , HOT WATER.
	XLPE PIPE 16mm, COLD WATER.
	XLPE PIPE 16mm, HOT WATER.
T/B:	TO BELOW.
T/A:	TO ABOVE.
GSP:	GALVANIZED STEEL PIPE SCH 40.
ODU	A/C OUTDOOR UNIT.
HDPE	HIGH DENSITY POLYETHYLENE .

Rev.	Date	Description	Drawn	Checked	Approved
2	01.08.2021	Draft Detailed Design	BM	OB	BA
1	01.08.2021	Draft Detailed Design	BM	OB	BA

Project: Support to Infrastructure Works for Phase II: Jericho Agro-Industrial Park and Deep Water Well Drilling

Contract No.: .....

Subject: Detail Design

Construction of Deep Well and Transmission Pipeline for JAIP
Well Site- Mechanical
Operator Room - Sanitary- Domestic Water Plan

Designed: Samed Burnat
Drawn: Bahaa Al Mur
Checked: Osama Bazzour
Approved: Bassam Abu Zahra
File Name: JAIP-WELL-OR-M.dwg
Date: 20-09-2021
Scale: 1: 25
Size: A1
Drawing No.: JAIP-W-OR-M-02
Sheet: 036/105
Rev.: 01

مركز الهندسة والتخطيط
center for engineering and planning

Center for Engineering and Planning
Ramallah, Palestine
Al Bireh - Al Medan St. Against Al Watanya Towers
P.O.Box 301

FINAL
2021-09-19

Implementing Agency:
United Nations Development Programme
Programme of Assistance to the Palestinian People
برنامج الأمم المتحدة الإنمائي برنامج مساعدة الشعب الفلسطيني
UNDP

Operator:
بلدية أريحا
Jericho Municipality

Owner:
سلطة المياه الفلسطينية
PALESTINIAN WATER AUTHORITY

Donor:
من الشعب الياباني
From the People of Japan

This document is the property of Center for Engineering and Planning (CEP) , any duplication or transmition to third parties is forbidden without its prior approval.

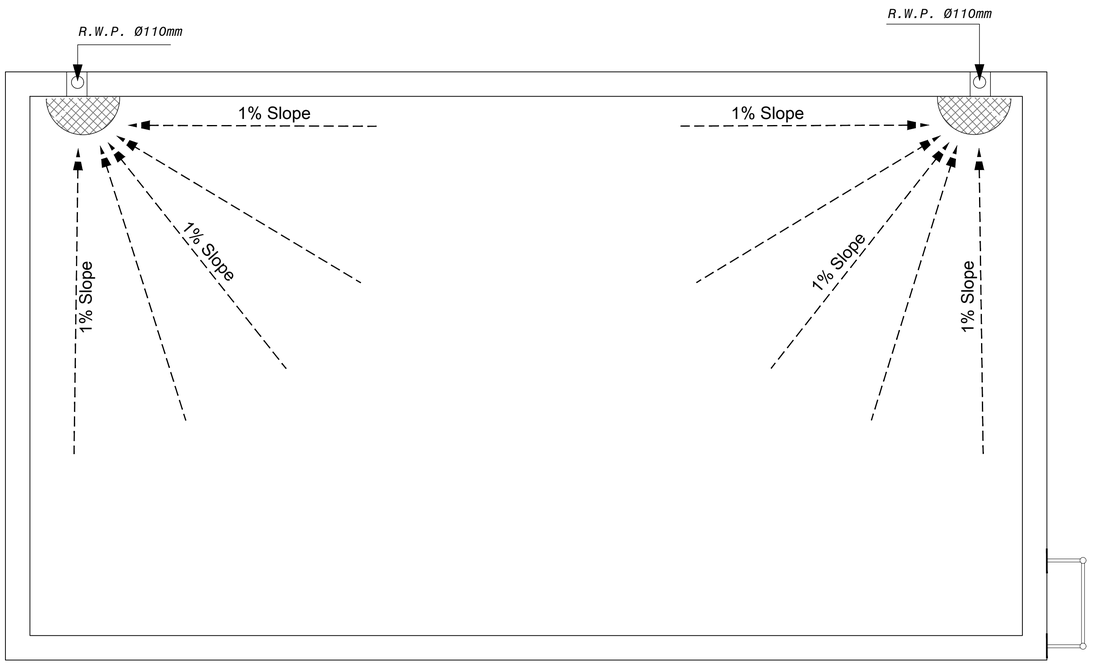

RAIN WATER FOR ROOF PLAN

SCALE 1:50

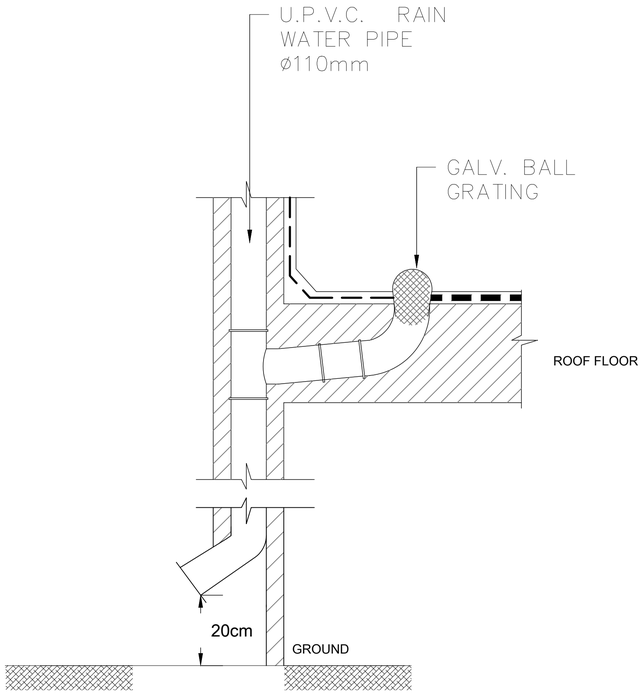

RAIN WATER TRAP DETAIL

NOT TO SCALE

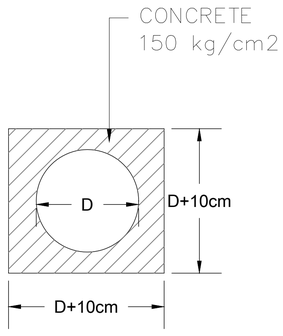

ENCASEMENT FOR PIPE LINES INSIDE WALLS

NOT TO SCALE

0 GRAPHIC SCALE 5m

* IF PRINTING ON A1- 1:100
* IF PRINTING ON A3- 1:200

NOTES

1. ALL DIMENSIONS ARE IN METERS. EXCEPT WHERE OTHERWISE SHOWN OR NOTED.
2. IT IS THE CONTRACTOR RESPONSIBILITY TO PREPARE AND SUBMIT WORKSHOP DRAWING FOR ENGINEERS BEFORE START WORKS.

Rev.	Date	Description	Drawn	Checked	Approved
2	24.08.2021	Draft Detailed Design	BM	OB	BA
1	01.08.2021	Draft Detailed Design	BM	OB	BA

Project: Support to Infrastructure Works for Phase II: Jericho Agro-Industrial Park and Deep Water Well Drilling

Contract No.: .....

Subject: Detail Design

Construction of Deep Well and Transmission Pipeline for JAIP
Well Site- Mechanical
Operator Room - Rainwater Drainage Plan

Designed: Samed Burnat
Drawn: Bahaa Al Mur
Checked: Osama Bazzour
Approved: Bassam Abu Zahra
File Name: JAIP-WELL-OR-M.dwg
Date: 20-09-2021
Scale: 1 : 25
Size: A1
Drawing No: JAIP-W-OR-M-03
Sheet: 037/105
Rev.: 01

مركز الهندسة والتخطيط
center for engineering and planning

Center for Engineering and Planning
Ramallah, Palestine
Al Bireh - Al Medan St. Against Al Watanya Towers
P.O.Box 301

FINAL
2021-09-19

Donor: من الشعب الياباني From the People of Japan

Owner: سلطة المياه الفلسطينية PALESTINIAN WATER AUTHORITY

Implementing Agency: بلدية أريحا Jericho Municipality

United Nations Development Programme
Programme of Assistance to the Palestinian People
برنامج الأمم المتحدة الإنمائي برنامج مساعدة الشعب الفلسطيني
UNDP

This document is the property of Center for Engineering and Planning (CEP), any duplication or transmition to third parties is forbidden without its prior approval.

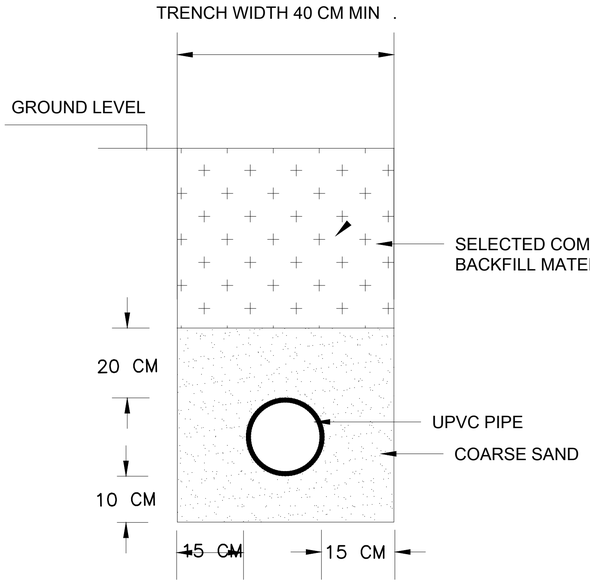

DRAINAGE PIPE TRENCH DETAIL

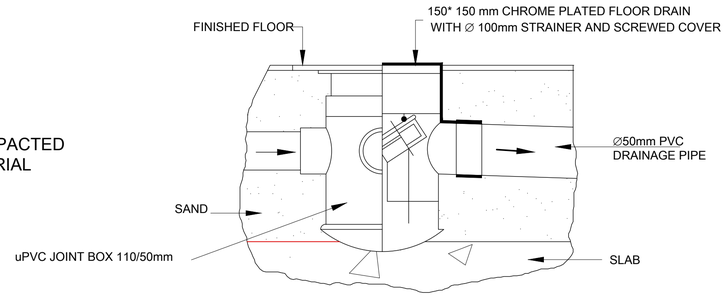

TYPICAL FLOOR DRAIN DETAIL

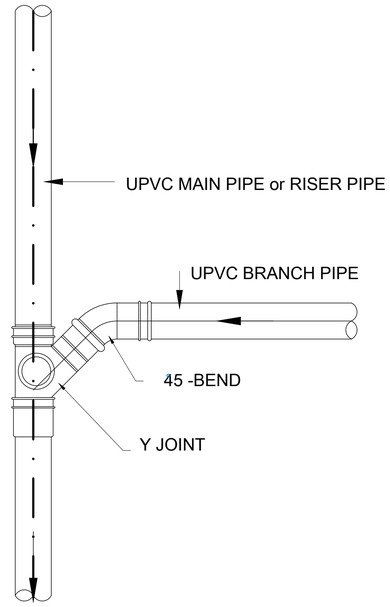

BRANCH CONNECTION OF DRAINAGE PIPE

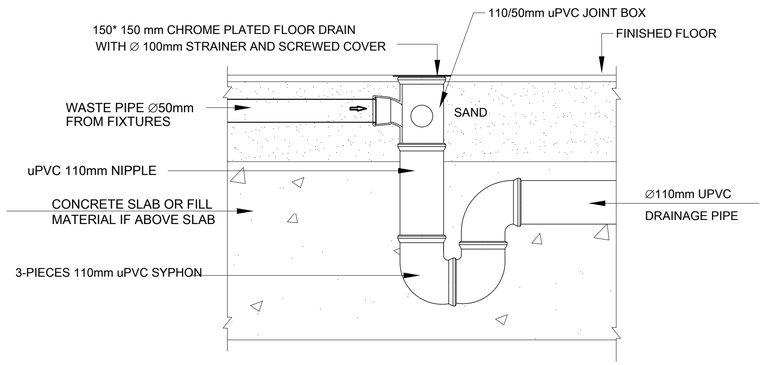

TYPICAL FLOOR TRAP DETAIL

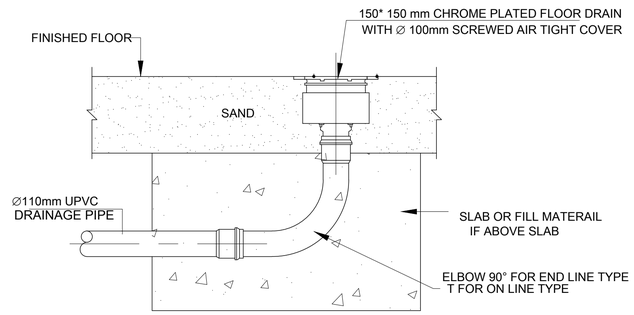

CLEAN OUT DETAIL

NOTES

NOTES

1. ALL DIMENSIONS ARE IN CENTIMETERS. EXCEPT WHERE OTHERWISE SHOWN OR NOTED.
2. COLD WATER STEEL PIPES TO BE APC/PE COATED.
3. HOT WATER STEEL PIPES TO BE INSOLATED WITH 6MM INSULATION (K<0.04 W/M.K) WITH VAPOR BARRIER.
4. MOUNT EXPOSED PIPES ON SADDLE METAL SUPPORTS.
5. BURIED PIPES ARE LOCATED AT 40 CM BELOW GROUND SURROUNDED (20CM) COARSE SAND, AND BACKFILLED WITH COMPACTED SELECTED MATERIAL-TRENCH 40CM*40CM.
6. PE PIPES ARE PLACED INSIDE 25MM PE CONDUITS.
7. ALL COPPER FITTINGS AND COLLECTORS ARE GIACOMINI OR EQUIVALENT.

Rev.	Date	Description	Drawn	Checked	Approved
2	24.08.2021	Draft Detailed Design	BM	OB	BA
1	01.08.2021	Draft Detailed Design	BM	OB	BA

Project: Support to Infrastructure Works for Phase II: Jericho Agro-Industrial Park and Deep Water Well Drilling

Contract No.: .....

Subject: Detail Design

Construction of Deep Well and Transmission Pipeline for JAIP
Well Site- Mechanical
Operator Room - Sanitary - Drainage Details

Designed: Samed Burnat
Drawn: Bahaa Al Mur
Checked: Osama Bazzour
Approved: Bassam Abu Zahra
File Name: JAIP-WELL-OR-M.dwg
Date: 20-09-2021
Scale: 1 : 25
Size: A1
Drawing No.: JAIP-W-OR-M-04
Sheet: 038/105
Rev.: 01

مركز الهندسة والتخطيط
center for engineering and planning

Center for Engineering and Planning
Ramallah - Palestine
Al Birah - Al Medan St. Against Al Watanya Towers
P.O.Box 301

FINAL
2021-09-19

Donor: من الشعب الياباني
From the People of Japan

Owner: سلطة المياه الفلسطينية
PALESTINIAN WATER AUTHORITY

Operator: بلدية أريحا
Jericho Municipality

Implementing Agency:
United Nations Development Programme
Programme of Assistance to the Palestinian People
برنامج الأمم المتحدة الإنمائي برنامج مساعدة الشعب الفلسطيني
UNDP

This document is the property of Center for Engineering and Planning (CEP), any duplication or transmittion to third parties is forbidden without its prior approval.

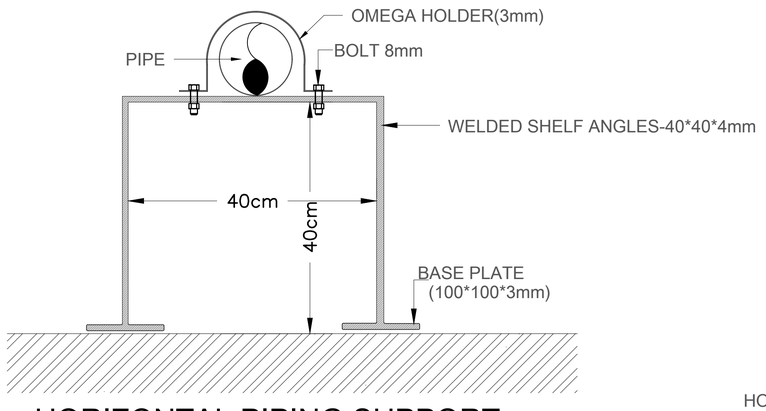

HORIZONTAL PIPING SUPPORT

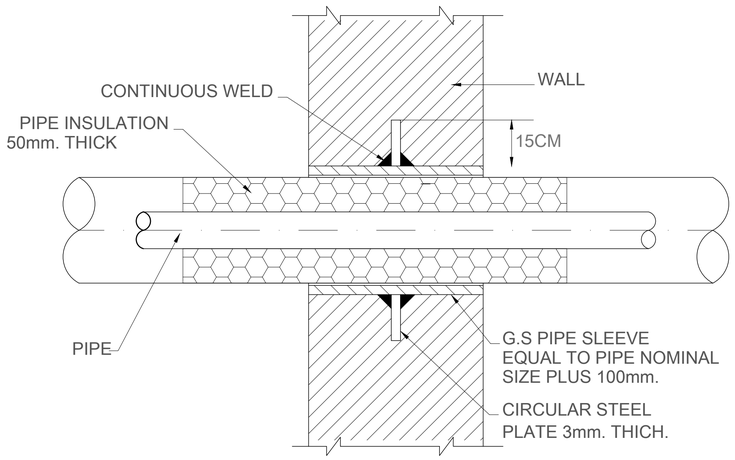

INSULATED PIPE SLEEVE THROUGH WALL

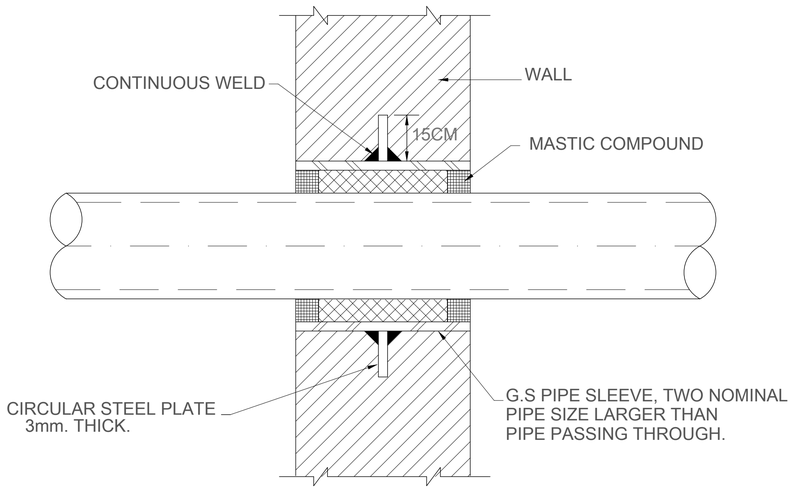

NOT INSULATED PIPE SLEEVE THROUGH WALL.

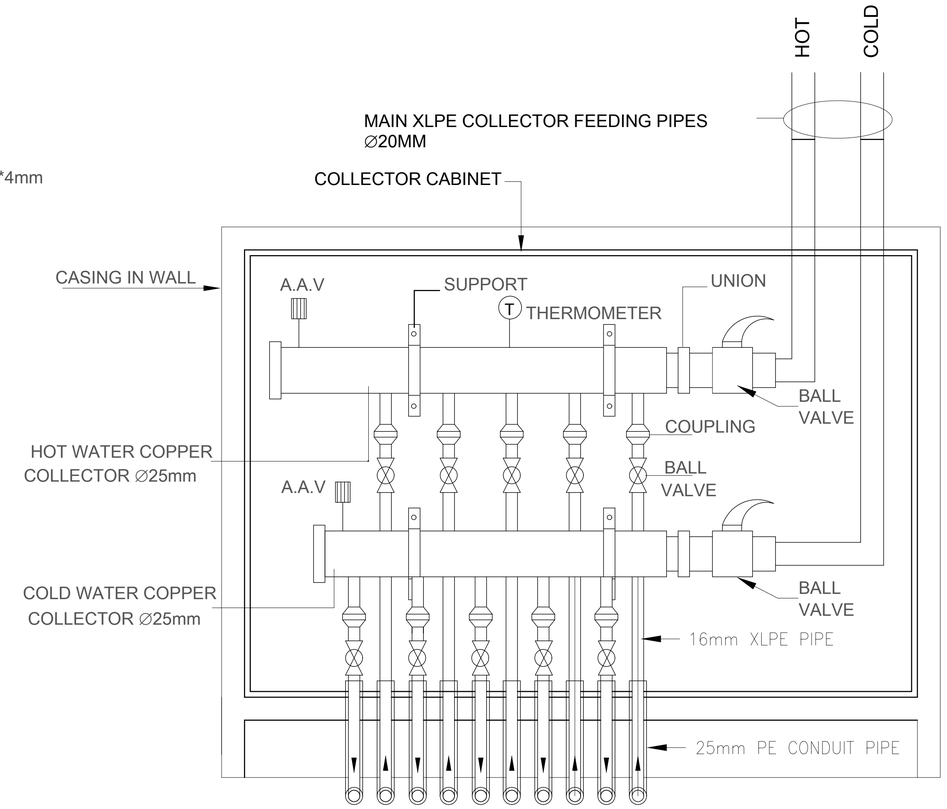

WATER DISTRIBUTION CABINET

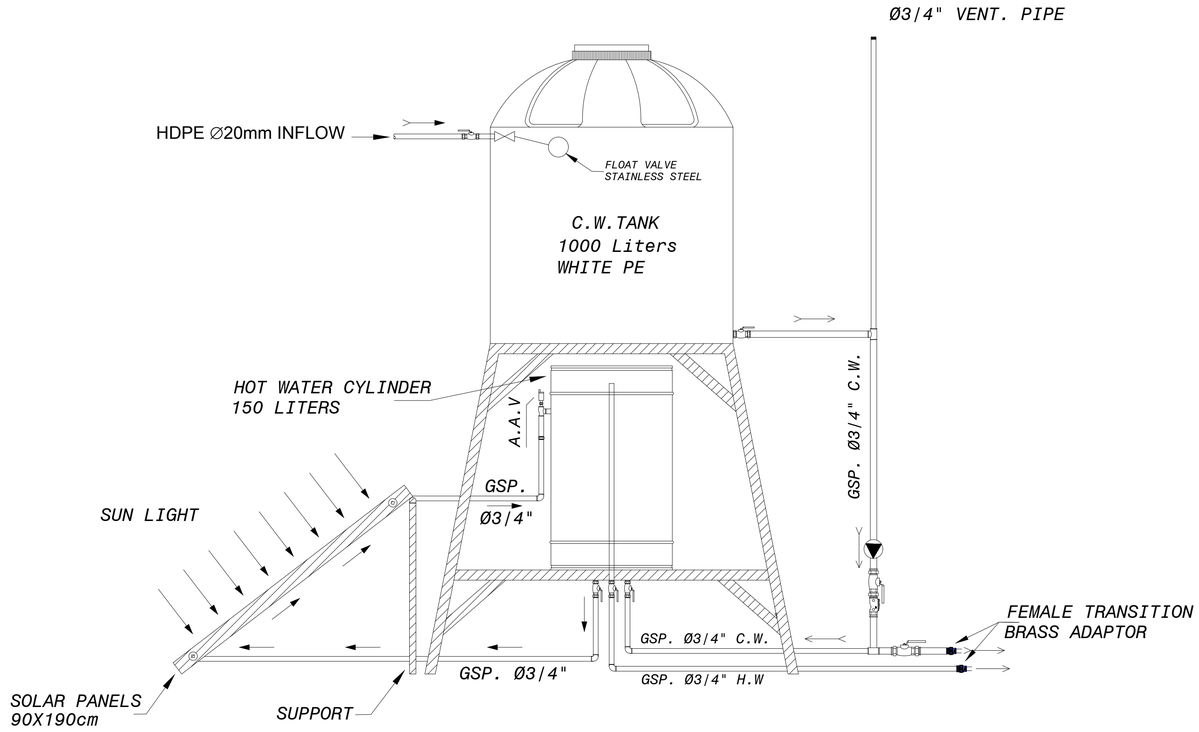

ROOF WATER TANK PIPE CONNECTIONS

NOTES

1. ALL DIMENSIONS ARE IN CENTIMETERS. EXCEPT WHERE OTHERWISE SHOWN OR NOTED.
2. COLD WATER STEEL PIPES TO BE APC/PE COATED.
3. HOT WATER STEEL PIPES TO BE INSOLATED WITH 6MM INSULATION (K<0.04 W/M.K) WITH VAPOR BARRIER.
4. MOUNT EXPOSED PIPES ON SADDLE METAL SUPPORTS.
5. BURIED PIPES ARE LOCATED AT 40 CM BELOW GROUND SURROUNDED (20CM) COARSE SAND, AND BACKFILLED WITH COMPACTED SELECTED MATERIAL-TRENCH 40CM*40CM.
6. PE PIPES ARE PLACED INSIDE 25MM PE CONDUITS.
7. ALL COPPER FITTINGS AND COLLECTORS ARE GIACOMINI OR EQUIVALENT.

LEGENDS

PE	POLYETHYLENE.
XLPE:	CROSS-LINKED POLYETHYLENE
AAV:	AUTOMATIC AIR VENT
GSP:	GALVANIZED STEEL PIPE (SCH 40).
CWI:	COLD WATER
HW	HOT WATER

Rev.	Date	Description	Drawn	Checked	Approved
2	24.08.2021	Draft Detailed Design	BM	OB	BA
1	01.08.2021	Draft Detailed Design	BM	OB	BA

Project: Support to Infrastructure Works for Phase II: Jericho Agro-Industrial Park and Deep Water Well Drilling

Contract No: .....

Subject: Detail Design

Construction of Deep Well and Transmission Pipeline for JAIP
Well Site- Mechanical
Operator Room - Sanitary - Water Details

Designed: Samed Burnat
Checked: Osama Bazzour
Drawn: Bahaa Al Mur
Approved: Bassam Abu Zahra

File Name: JAIP-WELL-OR-M.dwg
Date: 20-09-2021
Scale: 1: 25
Size: A1
Drawing No.: JAIP-W-OR-M-05
Sheet: 039/105
Rev.: 01

مركز المهندسين والتخطيط
center for engineering and planning

Center for Engineering and Planning
Ramallah, Palestine
Al Bireh - Al Moslah St. Against Al Waseriya Towers
P.O.Box 301

FINAL
2021-09-19

Donor: من الشعب الياباني
From the People of Japon

Owner: سلطة المياه الفلسطينية
PALESTINIAN WATER AUTHORITY

Operator: بلدية أريحا
Jericho Municipality

Implementing Agency: United Nations Development Programme
Programme of Assistance to the Palestinian People
برنامج الأمم المتحدة الإنمائي برنامج مساعدة الشعب الفلسطيني

This document is the property of Center for Engineering and Planning (CEP) , any duplication or transmission to third parties is forbidden without its prior approval.

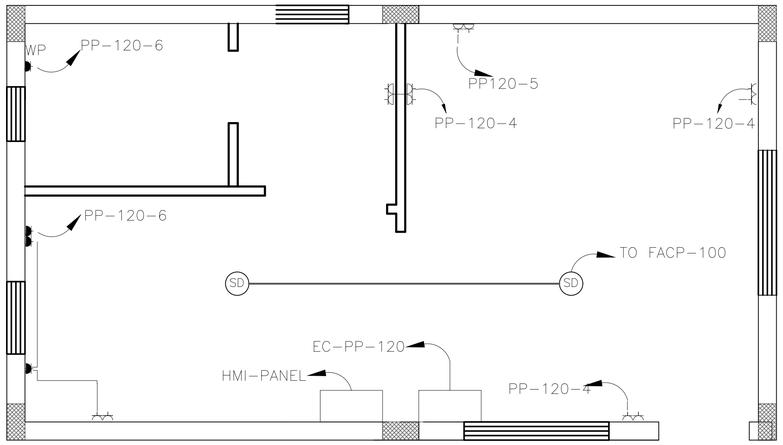

POWER PLAN

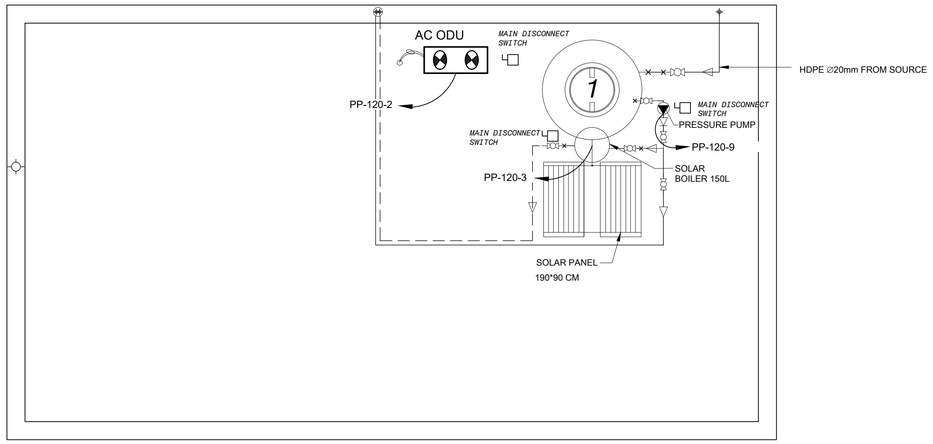

POWER ROOF PLAN

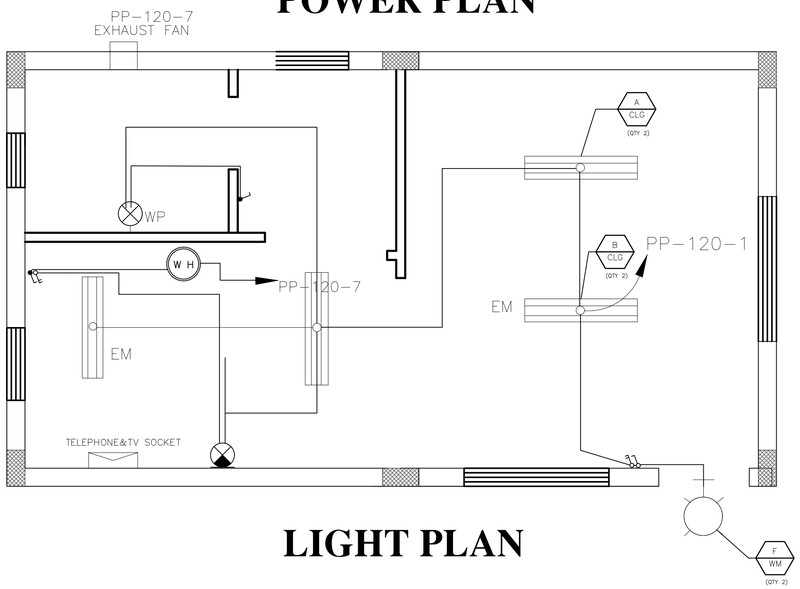

LIGHT PLAN

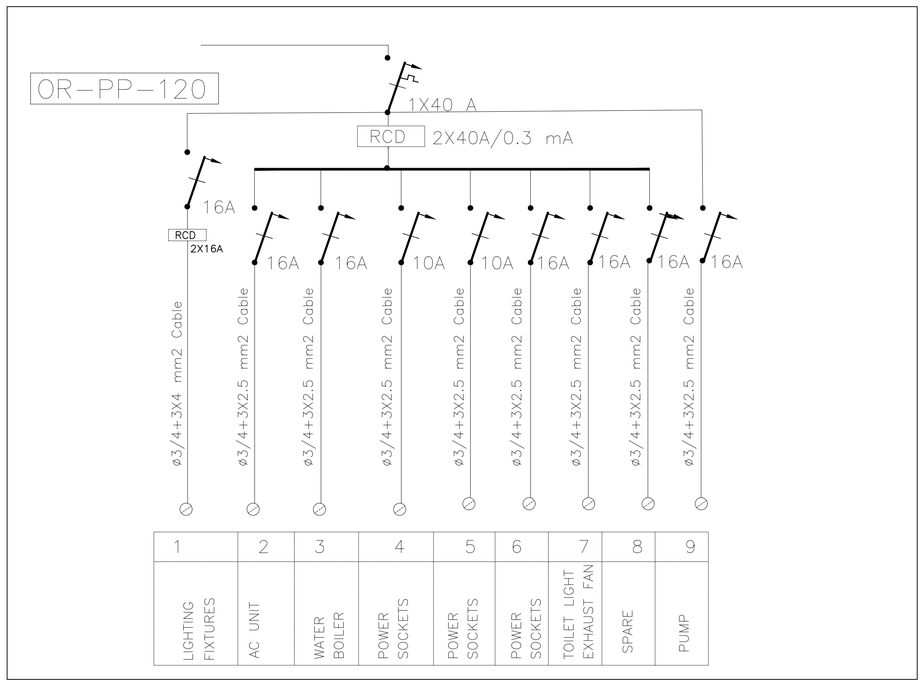

OR-PP-120\SLD

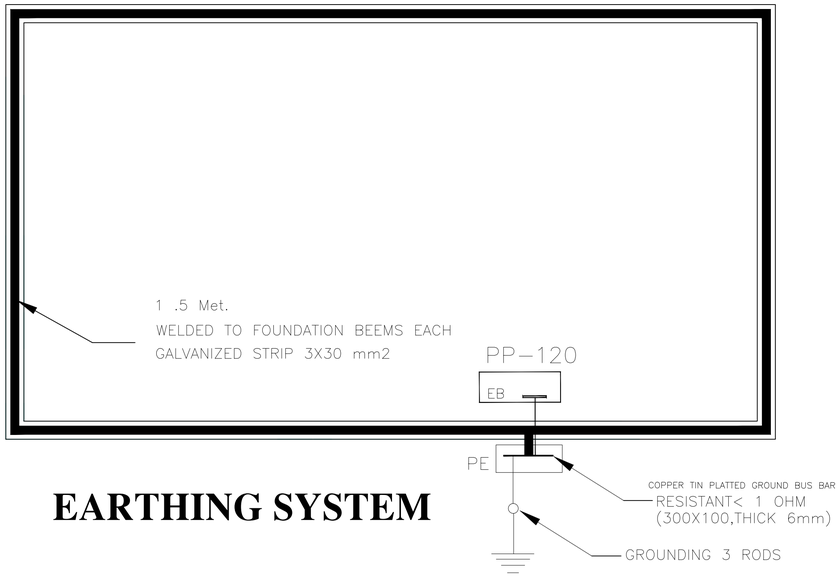

EARTHING SYSTEM

0 GRAPHIC SCALE 5m

* IF PRINTING ON A1- 1:100
* IF PRINTING ON A3- 1:200

NOTES

1. BRANCH CIRCUIT FOR LIGHTING AND POWER LOADS SHALL BE 4mm2 CONDUCTOR SIZE AND 3/4" CONDUITS.
2. PANEL BOARDS, RECEPTACLES, SWITCHES AND JUNCTION BOXES SHALL BE MOUNTED AT 1.5 mm2 A.F.F

LEGEND

Rev.	Date	Description	Drawn	Checked	Approved
2	24.08.2021	Draft Detailed Design	AJ	OB	BA
1	01.08.2021	Draft Detailed Design	AJ	OB	BA

Project: Support to Infrastructure Works for Phase II: Jericho Agro-Industrial Park and Deep Water Well Drilling

Contract No.: .....

Subject: Detail Design

Construction of Deep Well and Transmission Pipeline for JAIP
Well Site - Building Details
Operator Room - Electrical Details

Designed: A.Jamal
Drawn: A.Jamal
Checked: Osama Bazzour
Approved: Bassam Abu Zahra
File Name: JAIP-WELL-OR-E.dwg
Date: 20-09-2021
Scale: N.T.S
Size: A1
Drawing No.: JAIP-W-B-OR-E-01
Sheet: 40/105
Rev.: 00

مركز الهندسة والتخطيط
center for engineering and planning

Center for Engineering and Planning
Ramallah - Palestine
Al Birah - Al Medan St. Against Al Watanya Towers
P.O.Box 301

FINAL
2021-09-19

Implementing Agency:
United Nations Development Programme
Programme of Assistance to the Palestinian People
برنامج الأمم المتحدة الإنمائي برنامج مساعدة الشعب الفلسطيني

Operator:
Jericho Municipality
بلدية أريحا

Owner:
سلطة المياه الفلسطينية
PALESTINIAN WATER AUTHORITY

Donor:
من الشعب الياباني
From the People of Japan

This document is the property of Center for Engineering and Planning (CEP), any duplication or transmittion to third parties is forbidden without its prior approval.

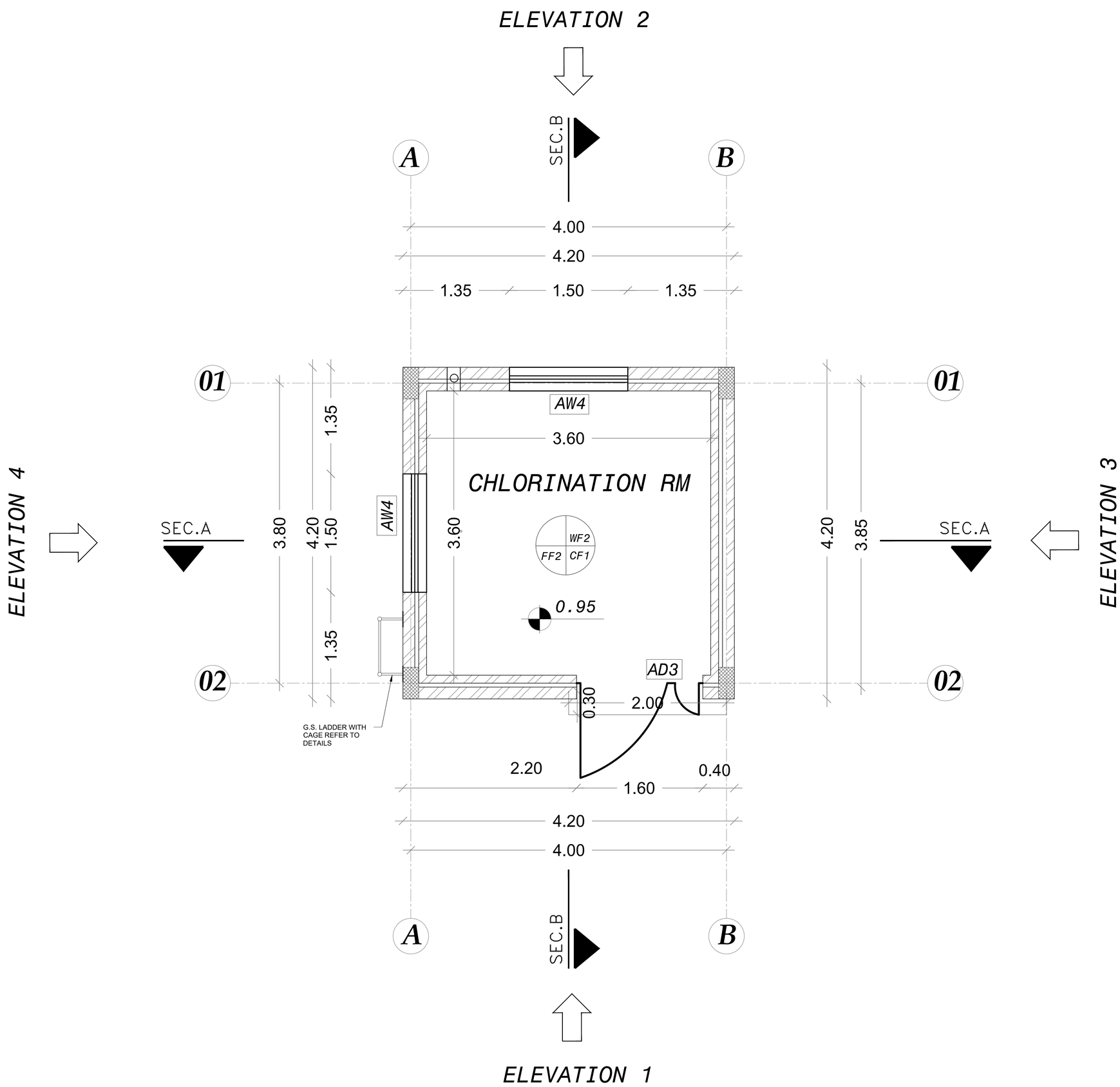

NOTES

1. ALL DIMENSIONS ARE IN METERS. EXCEPT WHERE OTHERWISE SHOWN OR NOTED.
2. IT IS THE CONTRACTOR RESPONSIBILITY TO PREPARE AND SUBMIT WORKSHOP DRAWING FOR ENGINEERS BEFORE START WORKS.
3. WF1 = PLASTER & EMULSION PAINT (SUPERCRYLE) FOR WALLS (OVER 1.5M).
4. WF2 = CERAMIC WALL TILES SIZE 200X200X8mm UP TO THE DOOR LEVEL AND WALL PLASTERING AND EMULSION PAINT (SUPERCRYLE) UP TO THE CEILING.
5. WF3 = PLASTER & EMULSION PAINT (OIL PAINTING) FOR WALLS (FROM PORCELAIN TILE TO 1.5 M HEIGHT).
6. FF1 = PORCELAIN FLOOR TILE SIZE 30X30X2.5cm MARBLE CHIPS.
7. FF2 = NON SLIPPING CERAMIC FLOOR TILES SIZE 200X200X8mm.
8. CF1 = PLASTER & EMULSION PAINT (POLYCEED) FOR CEILING.
9. EXISTING GROUND ELEVATION AT MAIN GATE = 239.75m = +0.00

NOTES

Rev.	Date	Description	Drawn	Checked	Approved
2	24.08.2021	Draft Detailed Design	BM	OB	BA
1	01.08.2021	Draft Detailed Design	BM	OB	BA

Project: Support to Infrastructure Works for Phase II: Jericho Agro-Industrial Park and Deep Water Well Drilling

Contract No.: .....

Detail Design

Subject: Construction of Deep Well and Transmission Pipeline for JAIP
Well Site- Civil
Chlorination Room - Floor Plan

Designed: 041
Drawn: Bahaa Al Mur
Checked: Osama Bazzour
Approved: Bassam Abu Zahra
File Name: JAIP-WELL-CR-A.dwg
Date: 24-08-2021
Scale: 1: 25
Size: A1
Drawing No: JAIP-W-CR-A-01
Sheet: 041/103
Rev: 01

FINAL
2021-09-19

مركز الهندسة والتخطيط
center for engineering and planning

Center for Engineering and Planning
Ramallah, Palestine
Al Bireh - Al Medan St. Against Al Watanya Towers
P.O.Box 301

Donor: من الشعب اليابانى
From the People of Japan

Owner: سلطة المياه الفلسطينية
Palestinian water authority

Operator: بلدية أريحا
Jericho Municipality

Implementing Agency:
United Nations Development Programme
Programme of Assistance to the Palestinian People
برنامج الأمم المتحدة الإنمائي برنامج مساعدة الشعب الفلسطيني
UNDP

This document is the property of Center for Engineering and Planning (CEP). .any duplication or transmition to third parties is forbidden without its prior approval.

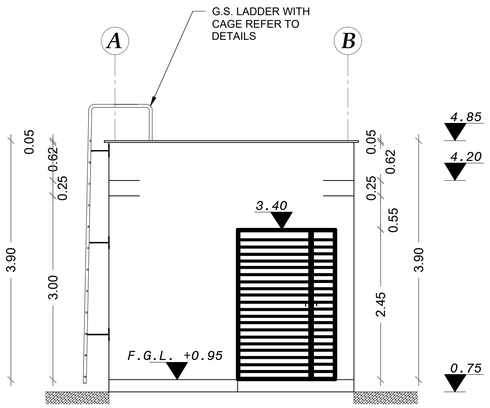

ELEVATION NO.1

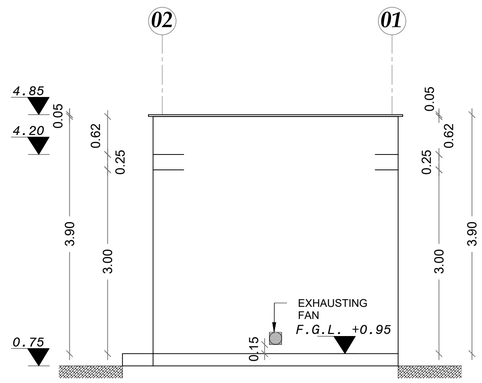

ELEVATION NO.3

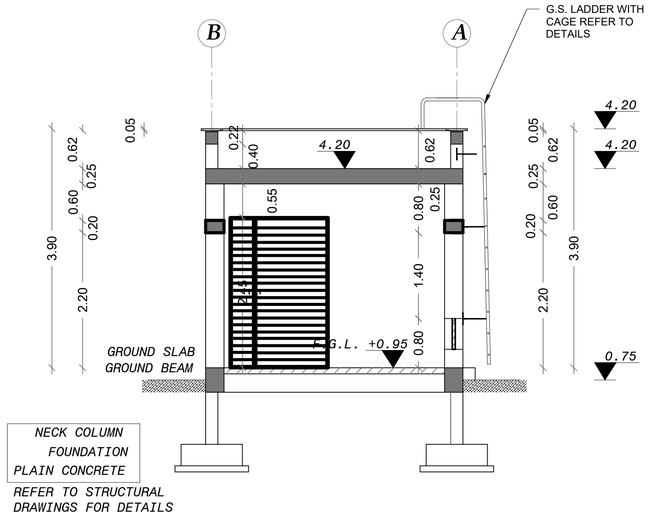

SECTION A-A

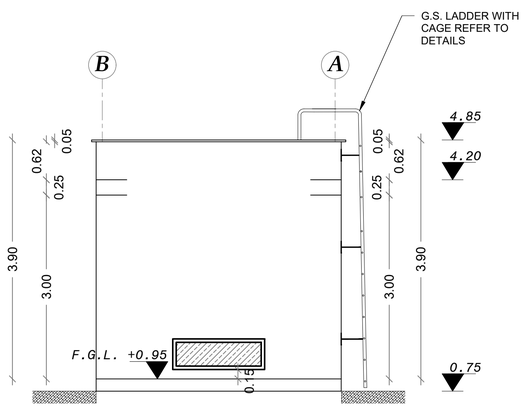

ELEVATION NO.2

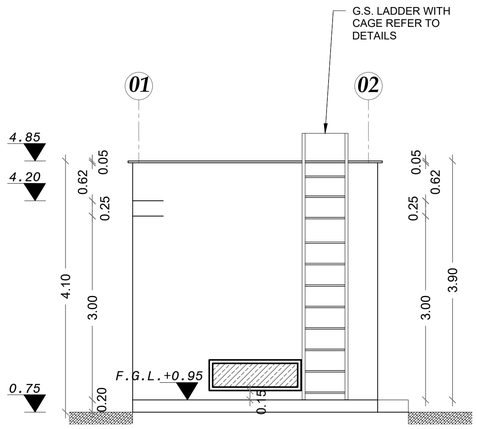

ELEVATION NO.4

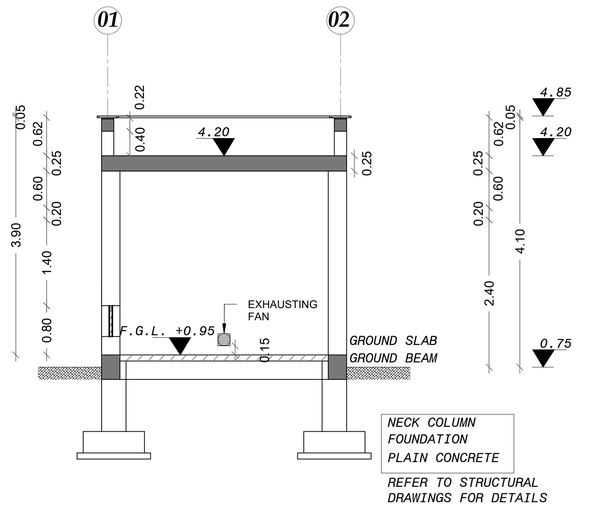

SECTION B-B

0 GRAPHIC SCALE 5m

* IF PRINTING ON A1- 1:100
* IF PRINTING ON A3- 1:200

NOTES

1. ALL DIMENSIONS ARE IN METERS. EXCEPT WHERE OTHERWISE SHOWN OR NOTED.
2. IT IS THE CONTRACTOR RESPONSIBILITY TO PREPARE AND SUBMIT WORKSHOP DRAWING FOR ENGINEERS BEFORE START WORKS.
3. EXISTING GROUND ELEVATION AT MAIN GATE = -239.75m = +0.00

Rev.	Date	Description	Drawn	Checked	Approved
2	24.08.2021	Draft Detailed Design	BM	OB	BA
1	01.08.2021	Draft Detailed Design	BM	OB	BA

Project: Support to Infrastructure Works for Phase II: Jericho Agro-Industrial Park and Deep Water Well Drilling

Contract No.: .....

Subject: Detail Design

Construction of Deep Well and Transmission Pipeline for JAIP
Well Site- Civil
Chlorination Room - Elevations & Sections

Designed: Samed Burnat
Drawn: Bahaa Al Mur
Checked: Osama Bazzour
Approved: Bassam Abu Zahra
File Name: JAIP-WELL-CR-A.dwg
Date: 24-08-2021
Scale: 1: 50
Size: A1
Drawing No.: JAIP-W-CR-A-02
Sheet: 042/103
Rev.: 01

مركز الهندسة والتخطيط
center for engineering and planning

Center for Engineering and Planning
Ramallah, Palestine
Al Birah - Al Medan St. Against Al Watanya Towers
P.O.Box 381

FINAL
2021-09-19

Donor: من الشعب الياباني
From the People of Japan

Owner: سلطة المياه الفلسطينية
PALESTINIAN WATER AUTHORITY

Operator: بلدية أريحا
Jericho Municipality

Implementing Agency:
United Nations Development Programme
Programme of Assistance to the Palestinian People
برنامج الأمم المتحدة الإنمائي برنامج مساعدة شعب فلسطين

This document is the property of Center for Engineering and Planning (CEP) , any duplication or transmission to third parties is forbidden without its prior approval.

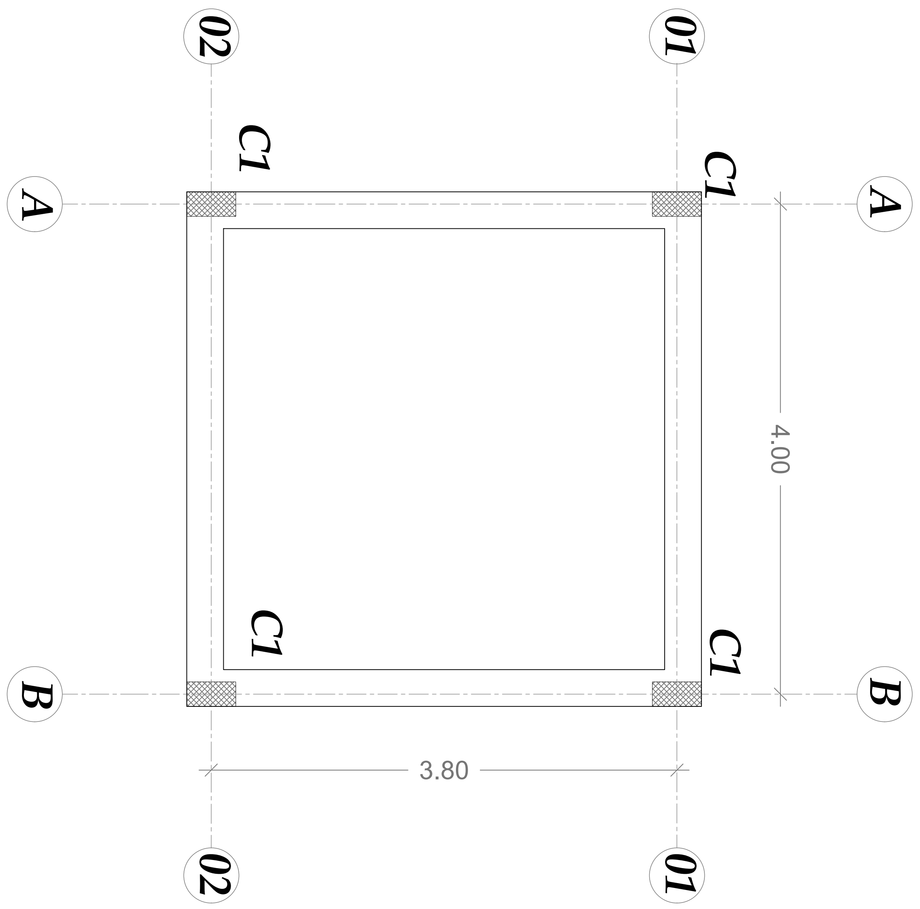

NOTES

10. MIN. LAP FOR STEEL BAR = 60CM OR 50 x DIA. BAR WHICH IS GREATER.
11. FOUND. AND COL. ARE DESIGNED ACCORDING TO ARCH. DRAWINGS.
12. MINIMUM DEPTH OF EXCAVATION IS 1.5M TO THE BOTTOM OF FOUNDATION AND/OR AS PER THE ENGINEER INSTRUCTIONS.
13. BAR CUT OFF POINTS FOR TYPICAL BEAMS IS AS FOLLOWS:

LARGER OF	LARGER OF
0.25L1	0.33L1 & 0.33L2
0.33L1 & 0.33L2	0.33L2 & 0.33L3

14. FOR OTHER BEAMS, THE CONTRACTOR SHOULD SUBMIT SHOP DRAWING FOR ENGINEER APPROVAL.

BENDS		HOOKS	
BAR SIZE	GRADE 250 (TYPE & GRADE R)	GRADE 420 (TYPE AND GRADE T)	
D	R	R	
6	12	18	
8	16	24	
10	20	30	
12	24	36	
14	28	42	
16	32	48	
18	36	54	

GRAPHIC SCALE
0 5m
IF PRINTING ON A1: 1:100
IF PRINTING ON A3: 1:200

مركز الهندسة والتخطيط
center for engineering and planning

Center for Engineering and Planning
Ramallah, Palestine
Al Bireh - Al Medan St. Against Al Wataniya Towers
P.O.Box 301

FINAL
2021-09-19

Designed:	Drawn:
Samed Burnat	Bahaa Al Mur
Checked:	Approved:
Osama Bazzour	Bassam Abu Zahra

File Name: JAIP-WELL-CR-C.dwg

Date	Scale	Size
24-08-2021	1: 25	A1

Drawing No.	Sheet	Rev.
JAIP-W-CR-C-01	043/105	01

Donor: صن الشعب الياباني From the People of Japan
Owner: سلطة المياه الفلسطينية PALESTINIAN WATER AUTHORITY
Operator: بلدية أريحا Jericho Municipality
Implementing Agency: United Nations Development Programme
Programme of Assistance to the Palestinian People
برنامج الأمم المتحدة الإنمائي، برنامج مساعدة الشعب الفلسطيني

This document is the property of Center for Engineering and Planning (CEP) , any duplication or transmition to third parties is forbidden without its prior approval.

Rev.	Date	Description	Drawn	Checked	Approved
2	24.08.2021	Draft Detailed Design	BM	OB	BA
1	01.08.2021	Draft Detailed Design	BM	OB	BA

Project: Support to Infrastructure Works for Phase II: Jericho Agro-Industrial Park and Deep Water Well Drilling

Contract No.: .....

Subject: Detail Design

Construction of Deep Well and Transmission Pipeline for JAIP Well Site- Civil
Chlorination Room - Columns Plan

NOTES

1. ALL DIMENSIONS ARE IN METERS. EXCEPT WHERE OTHERWISE SHOWN OR NOTED.
2. IT IS THE CONTRACTOR RESPONSIBILITY TO PREPARE AND SUBMIT WORKSHOP DRAWING FOR ENGINEERS BEFORE START WORKS.
3. ALL OF THE STRUCTURAL DRAWINGS ARE TO BE READ IN CONJUNCTION WITH THE PERTINENT ARCHITECTURAL, ELECTRICAL, MECHANICAL, CIVIL DEFENSE AND OTHER STRUCTURAL DRAWINGS.
4. IF THERE IS ANY DISCREPANCY IN DRAWINGS. THE CONTRACTOR MUST CONSIDER IT IN HIS PRICE.
5. CONCRETE SURFACE IN CONTACT WITH SOIL SHALL BE PAINTED 1-COAT PRIMER AND 2-COATS OF HOT BITUMEN.
6. DESIGN CODE ACI 318M-14.

NOTES

7. STEEL BARS PROVIDED BY CONTRACTOR (G420) Fy=420 MPA.
8. CONCRETE PROVIDED BY CONTRACTOR FOR COMPRESSIVE STRENGTH AS:
   - FOR COLUMNS B300
   - FOR FOUNDATION & SLABS B300
   - FOR STAIRS B300
   - FOR POST,LINTELS,CANOPIES,ALL SECONDARY ELEMENTS B250
   - FOR PLAIN CONCRETE B200
9. STEEL COVERS:
   - FOR FOUNDATIONS (CAST AGAINST SOIL) =7.5 CM
   - (FOR PROTECTED CONCRETE) =5.0 CM
   - FOR COLUMNS =4.0 CM
   - FOR SLABS =2.5 CM
   - FOR BEAMS =4.0 CM

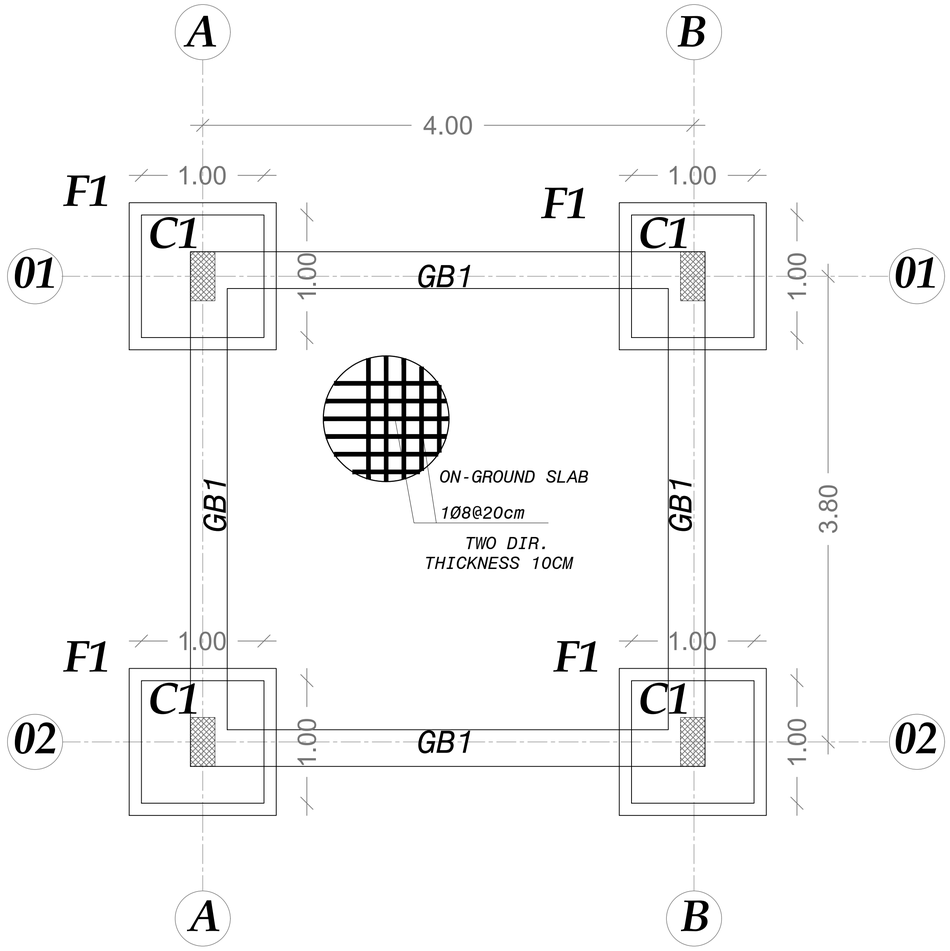

GROUND BEAM PLAN
Scale 1:50

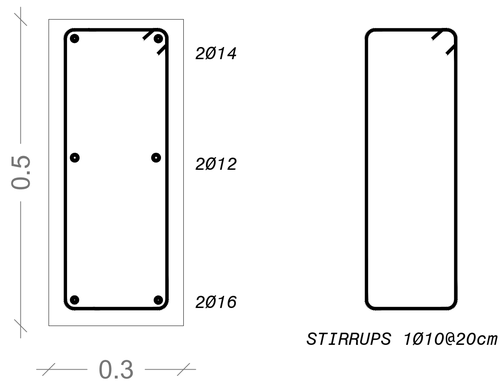

GROUND BEAM DETAILS (GB1)
Scale 1:10

NOTES

10. MIN. LAP FOR STEEL BAR = 60CM OR 50 x DIA. BAR WHICH IS GREATER.
11. FOUND. AND COL. ARE DESIGNED ACCORDING TO ARCH. DRAWINGS.
12. MINIMUM DEPTH OF EXCAVATION IS 1.5M TO THE BOTTOM OF FOUNDATION AND/OR AS PER THE ENGINEER INSTRUCTIONS.
13. BAR CUT OFF POINTS FOR TYPICAL BEAMS IS AS FOLLOWS:

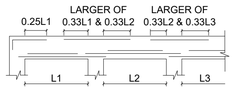

14. FOR OTHER BEAMS .THE CONTRACTOR SHOULD SUBMIT SHOP DRAWING FOR ENGINEER APPROVAL.

BENDS	HOOKS	
BAR SIZE	GRADE 250 (TYPE & GRADE R)	GRADE 420 (TYPE AND GRADE T)
D	R	R
6	12	18
8	16	24
10	20	30
12	24	36
14	28	42
16	32	48
18	36	54

NOTES

1. ALL DIMENSIONS ARE IN METERS. EXCEPT WHERE OTHERWISE SHOWN OR NOTED.
2. IT IS THE CONTRACTOR RESPONSIBILITY TO PREPARE AND SUBMIT WORKSHOP DRAWING FOR ENGINEERS BEFORE START WORKS.
3. ALL OF THE STRUCTURAL DRAWINGS ARE TO BE READ IN CONJUNCTION WITH THE PERTINENT ARCHITECTURAL, ELECTRICAL, MECHANICAL, CIVIL DEFENSE AND OTHER STRUCTURAL DRAWINGS.
4. IF THERE IS ANY DISCREPANCY IN DRAWINGS. THE CONTRACTOR MUST CONSIDER IT IN HIS PRICE.
5. CONCRETE SURFACE IN CONTACT WITH SOIL SHALL BE PAINTED 1-COAT PRIMER AND 2-COATS OF HOT BITUMEN.
6. DESIGN CODE ACI 318M-14.
7. STEEL BARS PROVIDED BY CONTRACTOR (G420) Fy=420 MPA.
8. CONCRETE PROVIDED BY CONTRACTOR FOR COMPRESSIVE STRENGTH AS:
   - FOR COLUMNS B300
   - FOR FOUNDATION & SLABS B300
   - FOR STAIRS B300
   - FOR POST,LINTELS,CANOPIES ALL SECONDARY ELEMENTS B250
   - FOR PLAIN CONCRETE B200
9. STEEL COVERS:
   - FOR FOUNDATIONS (CAST AGAINST SOIL) =7.5 CM
   - (FOR PROTECTED CONCRETE) =5.0 CM
   - FOR COLUMNS =4.0 CM
   - FOR SLABS =2.5 CM
   - FOR BEAMS =4.0 CM

Rev.	Date	Description	Drawn	Checked	Approved
2	24.08.2021	Draft Detailed Design	BM	OB	BA
1	01.08.2021	Draft Detailed Design	BM	OB	BA

Project: Support to Infrastructure Works for Phase II: Jericho Agro-Industrial Park and Deep Water Well Drilling

Contract No.: .....

Subject: Detail Design

Construction of Deep Well and Transmission Pipeline for JAIP
Well Site- Civil
Operator Room - Footings Plan

Designed: Samed Burnat
Drawn: Bahaa Al Mur
Checked: Osama Bazzour
Approved: Bassam Abu Zahra
File Name: JAIP-WELL-CR-C.dwg
Date: 24-08-2021
Scale: 1: 25
Size: A1
Drawing No.: JAIP-W-CR-C-02
Sheet: 044/105
Rev.: 01

مركز الهندسة والتخطيط
center for engineering and planning

Center for Engineering and Planning
Ramallah - Palestine
Al Bireh - Al Medan St. Against Al Watanya Towers
P.O.Box 381

F I N A L
2021-09-19

Donor: From the People of Japan — الشعب الياباني
Owner: سلطة المياه الفلسطينية — PALESTINIAN WATER AUTHORITY
Operator: بلدية أريحا — Jericho Municipality
Implementing Agency: United Nations Development Programme — Programme of Assistance to the Palestinian People — برنامج الأمم المتحدة الإنمائي برنامج مساعدة الشعب الفلسطيني

This document is the property of Center for Engineering and Planning (CEP) , any duplication or transmitted to third parties is forbidden without its prior approval.

0 GRAPHIC SCALE 5m
* IF PRINTING ON A1- 1:100
* IF PRINTING ON A3- 1:200

Table of Footings (ISOLATED)

Footing		Total	Footings size			Reinforcement		
FOOT.NAME	FOOT.NO.		L(cm)	W(cm)	h(cm)	LONG DIR.	SHORT DIR.	Shape
F1	4	4	100	100	50	1Ø12@15cm	1Ø12@15cm	20 L OR W -10cm 20

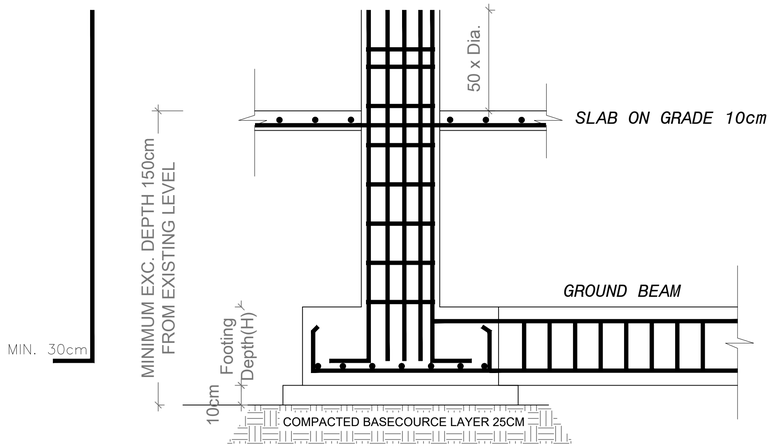

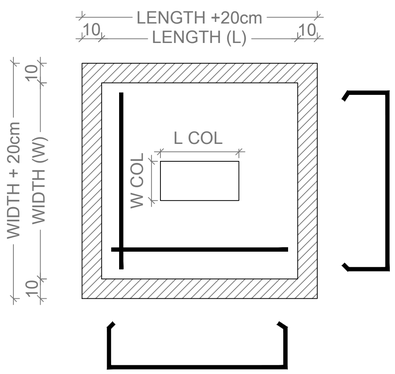

TYPICAL DETAILS FOR ISOLATED FOOTING

FOOTING DETAILS

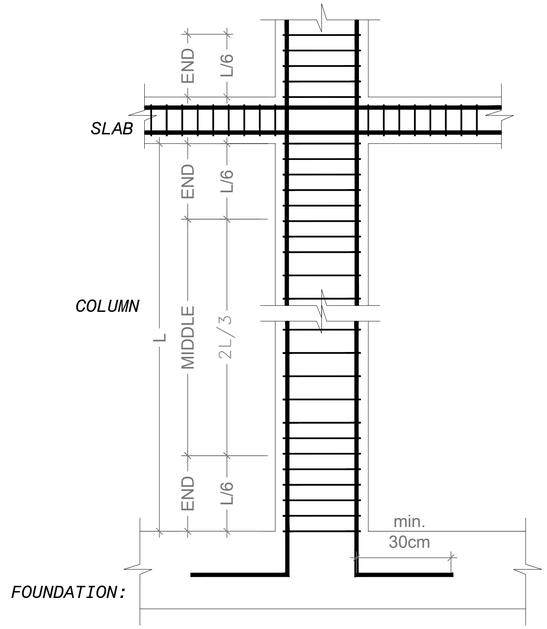

TYPICAL DETAILS FOR
COLUMN STIRRUP SPACING

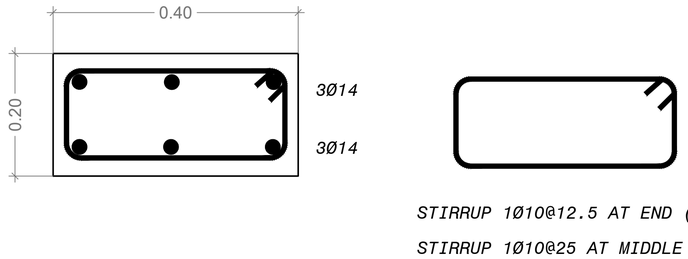

COLUMN DETAILS
FOR All COLUMNS.
Scale 1:5

COLUMN DETAILS

NOTES

10. MIN. LAP FOR STEEL BAR = 60CM OR 50 x DIA. BAR WHICH IS GREATER.
11. FOUND. AND COL. ARE DESIGNED ACCORDING TO ARCH. DRAWINGS.
12. MINIMUM DEPTH OF EXCAVATION IS 1.5M TO THE BOTTOM OF FOUNDATION AND/OR AS PER THE ENGINEER INSTRUCTIONS.
13. BAR CUT OFF POINTS FOR TYPICAL BEAMS IS AS FOLLOWS:

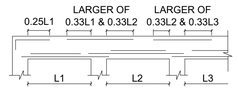

14. FOR OTHER BEAMS .THE CONTRACTOR SHOULD SUBMIT SHOP DRAWING FOR ENGINEER APPROVAL.

BENDS R — HOOKS R

BAR SIZE	GRADE 250 (TYPE & GRADE R)	GRADE 420 (TYPE AND GRADE T)
D	R	R
6	12	18
8	16	24
10	20	30
12	24	36
14	28	42
16	32	48
18	36	54

NOTES

1. ALL DIMENSIONS ARE IN METERS. EXCEPT WHERE OTHERWISE SHOWN OR NOTED.
2. IT IS THE CONTRACTOR RESPONSIBILITY TO PREPARE AND SUBMIT WORKSHOP DRAWING FOR ENGINEERS BEFORE START WORKS.
3. ALL OF THE STRUCTURAL DRAWINGS ARE TO BE READ IN CONJUNCTION WITH THE PERTINENT ARCHITECTURAL, ELECTRICAL, MECHANICAL, CIVIL DEFENSE AND OTHER STRUCTURAL DRAWINGS.
4. IF THERE IS ANY DISCREPANCY IN DRAWINGS. THE CONTRACTOR MUST CONSIDER IT IN HIS PRICE.
5. CONCRETE SURFACE IN CONTACT WITH SOIL SHALL BE PAINTED 1-COAT PRIMER AND 2-COATS OF HOT BITUMEN.
6. DESIGN CODE ACI 318M-14.
7. STEEL BARS PROVIDED BY CONTRACTOR (G420) Fy=420 MPA.
8. CONCRETE PROVIDED BY CONTRACTOR FOR COMPRESSIVE STRENGTH AS:
   - FOR COLUMNS B300
   - FOR FOUNDATION & SLABS B300
   - FOR STAIRS B300
   - FOR POST,LINTELS,CANOPIES ALL SECONDARY ELEMENTS B250
   - FOR PLAIN CONCRETE B200
9. STEEL COVERS:
   - FOR FOUNDATIONS (CAST AGAINST SOIL) =7.5 CM
   - (FOR PROTECTED CONCRETE) =5.0 CM
   - FOR COLUMNS =4.0 CM
   - FOR SLABS =2.5 CM
   - FOR BEAMS =4.0 CM

Rev.	Date	Description	Drawn	Checked	Approved
2	24.08.2021	Draft Detailed Design	BM	OB	BA
1	01.08.2021	Draft Detailed Design	BM	OB	BA

Project: Support to Infrastructure Works for Phase II: Jericho Agro-Industrial Park and Deep Water Well Drilling

Contract No.: .....

Subject: Detail Design

Construction of Deep Well and Transmission Pipeline for JAIP Well Site- Civil
Chlorination Room - Columns and Footings Details

Designed: Samed Burnat
Drawn: Bahaa Al Mur
Checked: Osama Bazzour
Approved: Bassam Abu Zahra
File Name: JAIP-WELL-CR-C.dwg
Date: 24-08-2021
Scale: 1:50
Size: A1
Drawing No.: JAIP-W-CR-C-03
Sheet: 045/105
Rev.: 01

مركز الهندسة والتخطيط
center for engineering and planning

Center for Engineering and Planning
Ramallah - Palestine
Al Bireh - Al Medan St. Against Al Watanya Towers
P.O.Box 301

FINAL
2021-09-19

Donor: من الشعب الياباني From the People of Japan
Owner: سلطة المياه الفلسطينية PALESTINIAN WATER AUTHORITY
Operator: بلدية أريحا Jericho Municipality
Implementing Agency: United Nations Development Programme
Programme of Assistance to the Palestinian People
برنامج الأمم المتحدة الإنمائي برنامج مساعدة الشعب الفلسطيني

This document is the property of Center for Engineering and Planning (CEP), any duplication or transmition to third parties is forbidden without its prior approval.

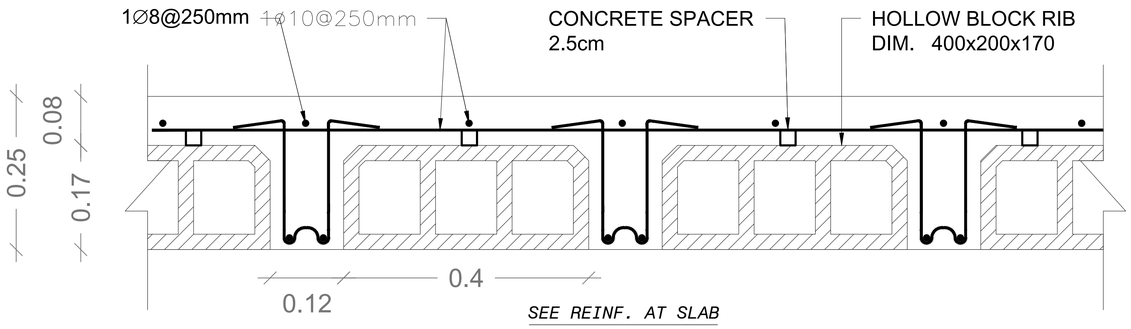

SECTION DETAIL FOR RIBS

SCALE 1:10

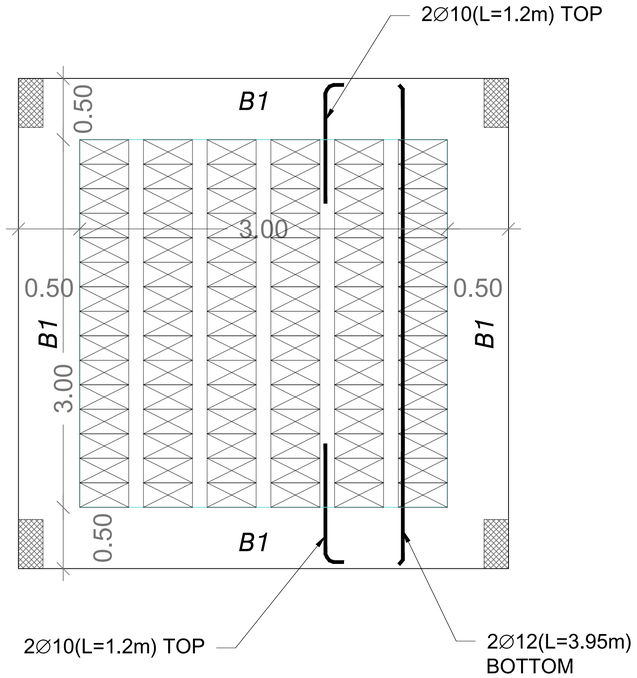

REINF. FOR CHLORINATION ROOM SLAB

SCALE 1:50

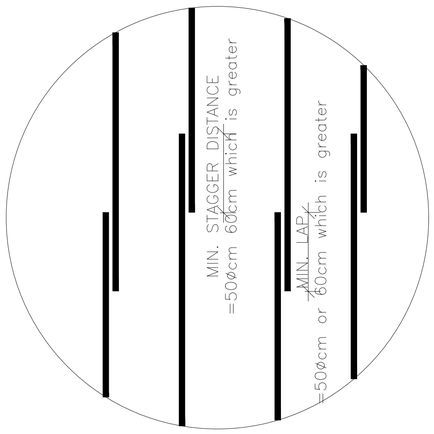

TYPICAL STAGGERING REINFORCEMENT DETAILS

NOTES

10. MIN. LAP FOR STEEL BAR = 60CM OR 50 x DIA. BAR WHICH IS GREATER.
11. FOUND. AND COL. ARE DESIGNED ACCORDING TO ARCH. DRAWINGS.
12. MINIMUM DEPTH OF EXCAVATION IS 1.5M TO THE BOTTOM OF FOUNDATION AND/OR AS PER THE ENGINEER INSTRUCTIONS.
13. BAR CUT OFF POINTS FOR TYPICAL BEAMS IS AS FOLLOWS:

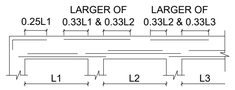

14. FOR OTHER BEAMS .THE CONTRACTOR SHOULD SUBMIT SHOP DRAWING FOR ENGINEER APPROVAL.

BENDS R		HOOKS R	
BAR SIZE	GRADE 250 (TYPE & GRADE R)	GRADE 420 (TYPE AND GRADE T)	
D	R	R	
6	12	18	
8	16	24	
10	20	30	
12	24	36	
14	28	42	
16	32	48	
18	36	54	

NOTES

7. STEEL BARS PROVIDED BY CONTRACTOR (G420) Fy=420 MPA.
8. CONCRETE PROVIDED BY CONTRACTOR FOR COMPRESSIVE STRENGTH AS:
   - FOR COLUMNS B300
   - FOR FOUNDATION & SLABS B300
   - FOR STAIRS B300
   - FOR POST,LINTELS,CANOPIES ALL SECONDARY ELEMENTS B250
   - FOR PLAIN CONCRETE B200
9. STEEL COVERS:
   - FOR FOUNDATIONS (CAST AGAINST SOIL) =7.5 CM
   - (FOR PROTECTED CONCRETE) =5.0 CM
   - FOR COLUMNS =4.0 CM
   - FOR SLABS =2.5 CM
   - FOR BEAMS =4.0 CM

NOTES

1. ALL DIMENSIONS ARE IN METERS. EXCEPT WHERE OTHERWISE SHOWN OR NOTED.
2. IT IS THE CONTRACTOR RESPONSIBILITY TO PREPARE AND SUBMIT WORKSHOP DRAWING FOR ENGINEERS BEFORE START WORKS.
3. ALL OF THE STRUCTURAL DRAWINGS ARE TO BE READ IN CONJUNCTION WITH THE PERTINENT ARCHITECTURAL, ELECTRICAL, MECHANICAL, CIVIL DEFENSE AND OTHER STRUCTURAL DRAWINGS.
4. IF THERE IS ANY DISCREPANCY IN DRAWINGS. THE CONTRACTOR MUST CONSIDER IT IN HIS PRICE.
5. CONCRETE SURFACE IN CONTACT WITH SOIL SHALL BE PAINTED 1-COAT PRIMER AND 2-COATS OF HOT BITUMEN.
6. DESIGN CODE ACI 318M-14.

Rev.	Date	Description	Drawn	Checked	Approved
2	24.08.2021	Draft Detailed Design	BM	OB	BA
1	01.08.2021	Draft Detailed Design	BM	OB	BA

Project: Support to Infrastructure Works for Phase II: Jericho Agro-Industrial Park and Deep Water Well Drilling

Contract No.: .....

Subject: Detail Design

Construction of Deep Well and Transmission Pipeline for JAIP
Well Site- Civil
Chlorination Room - Reinforcement Slab - I

Designed: Samed Burnat
Drawn: Bahaa Al Mur
Checked: Osama Bazzour
Approved: Bassam Abu Zahra
File Name: JAIP-WELL-CR-C.dwg
Date: 24-08-2021
Scale: 1 : 25
Size: A1
Drawing No.: JAIP-W-CR-C-04
Sheet: 046/105
Rev.: 01

مركز الهندسة والتخطيط
center for engineering and planning

Center for Engineering and Planning
Ramallah - Palestine
Al Birah - Al Medan St. Against Al Watanya Towers
P.O.Box 381

F I N A L
2021-09-19

Donor: من الشعب الياباني
From the People of Japan

Owner: سلطة المياه الفلسطينية
PALESTINIAN WATER AUTHORITY

Operator: بلدية أريحا
Jericho Municipality

Implementing Agency: United Nations Development Programme
Programme of Assistance to the Palestinian People
برنامج الأمم المتحدة الإنمائي برنامج مساعدة شعب فلسطين
UNDP

This document is the property of Center for Engineering and Planning (CEP) , any duplication or transmition to third parties is forbidden without its prior approval.

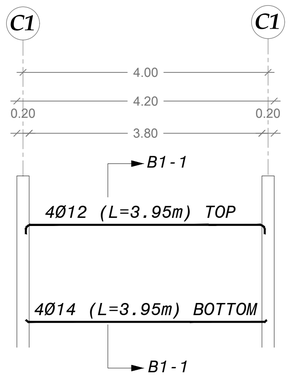

REINF. FOR BEAM NO. 1 (B1) FIRST DIRECTION

SCALE: 1:50

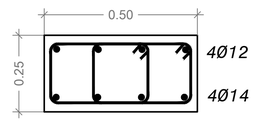

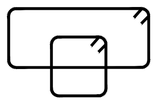

STIRRUPS 2Ø10@20cm

SECTION: B1-1

SCALE: 1:10

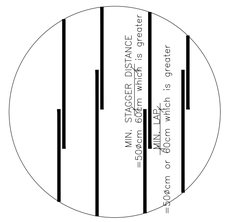

TYPICAL STAGGERING REINFORCEMENT DETAILS

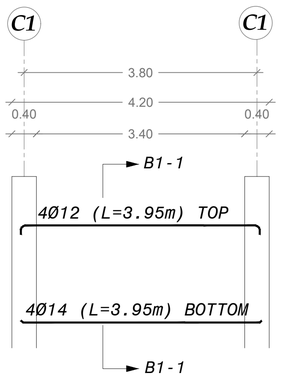

REINF. FOR BEAM NO. 1 (B1) SECOND DIRECTION

SCALE: 1:50

NOTES

10. MIN. LAP FOR STEEL BAR = 60CM OR 50 x DIA. BAR WHICH IS GREATER.
11. FOUND. AND COL. ARE DESIGNED ACCORDING TO ARCH. DRAWINGS.
12. MINIMUM DEPTH OF EXCAVATION IS 1.5M TO THE BOTTOM OF FOUNDATION AND/OR AS PER THE ENGINEER INSTRUCTIONS.
13. BAR CUT OFF POINTS FOR TYPICAL BEAMS IS AS FOLLOWS:

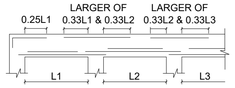

14. FOR OTHER BEAMS .THE CONTRACTOR SHOULD SUBMIT SHOP DRAWING FOR ENGINEER APPROVAL.

BENDS R	HOOKS R
BAR SIZE	GRADE 250 (TYPE & GRADE R)	GRADE 420 (TYPE AND GRADE T)
D	R	R
6	12	18
8	16	24
10	20	30
12	24	36
14	28	42
16	32	48
18	36	54

NOTES

1. ALL DIMENSIONS ARE IN METERS. EXCEPT WHERE OTHERWISE SHOWN OR NOTED.
2. IT IS THE CONTRACTOR RESPONSIBILITY TO PREPARE AND SUBMIT WORKSHOP DRAWING FOR ENGINEERS BEFORE START WORKS.
3. ALL OF THE STRUCTURAL DRAWINGS ARE TO BE READ IN CONJUNCTION WITH THE PERTINENT ARCHITECTURAL, ELECTRICAL, MECHANICAL, CIVIL DEFENSE AND OTHER STRUCTURAL DRAWINGS.
4. IF THERE IS ANY DISCREPANCY IN DRAWINGS. THE CONTRACTOR MUST CONSIDER IT IN HIS PRICE.
5. CONCRETE SURFACE IN CONTACT WITH SOIL SHALL BE PAINTED 1-COAT PRIMER AND 2-COATS OF HOT BITUMEN.
6. DESIGN CODE ACI 318M-14.
7. STEEL BARS PROVIDED BY CONTRACTOR (G420) Fy=420 MPA.
8. CONCRETE PROVIDED BY CONTRACTOR FOR COMPRESSIVE STRENGTH AS:
   - FOR COLUMNS B300
   - FOR FOUNDATION & SLABS B300
   - FOR STAIRS B300
   - FOR POST,LINTELS,CANOPIES ALL SECONDARY ELEMENTS B250
   - FOR PLAIN CONCRETE B200
9. STEEL COVERS:
   - FOR FOUNDATIONS (CAST AGAINST SOIL) =7.5 CM
   - (FOR PROTECTED CONCRETE) =5.0 CM
   - FOR COLUMNS =4.0 CM
   - FOR SLABS =2.5 CM
   - FOR BEAMS =4.0 CM

Rev.	Date	Description	Drawn	Checked	Approved
2	24.08.2021	Draft Detailed Design	BM	OB	BA
1	01.08.2021	Draft Detailed Design	BM	OB	BA

Project: Support to Infrastructure Works for Phase II: Jericho Agro-Industrial Park and Deep Water Well Drilling

Contract No.: .....

Subject: Detail Design

Construction of Deep Well and Transmission Pipeline for JAIP
Well Site- Civil
Chlorination Room - Reinforcement Slab - II

Designed: Samed Burnat
Drawn: Bahaa Al Mur
Checked: Osama Bazzour
Approved: Bassam Abu Zahra
File Name: JAIP-WELL-CR-C.dwg
Date: 24-08-2021
Scale: 1: 50
Size: A1
Drawing No.: JAIP-W-CR-C-05
Sheet: 047/105
Rev.: 01

مركز الهندسة والتخطيط
center for engineering and planning

Center for Engineering and Planning
Ramallah, Palestine
Al Bireh - Al Medan St. Against Al Watanya Towers
P.O.Box 301

FINAL
2021-09-19

Donor: من الشعب الياباني
From the People of Japan

Owner: سلطة المياه الفلسطينية
Palestinian water authority

Operator: بلدية أريحا
Jericho Municipality

Implementing Agency: United Nations Development Programme
Programme of Assistance to the Palestinian People
برنامج الأمم المتحدة الإنمائي برنامج مساعدة الشعب الفلسطيني

This document is the property of Center for Engineering and Planning (CEP) , any duplication or transmition to third parties is forbidden without its prior approval.

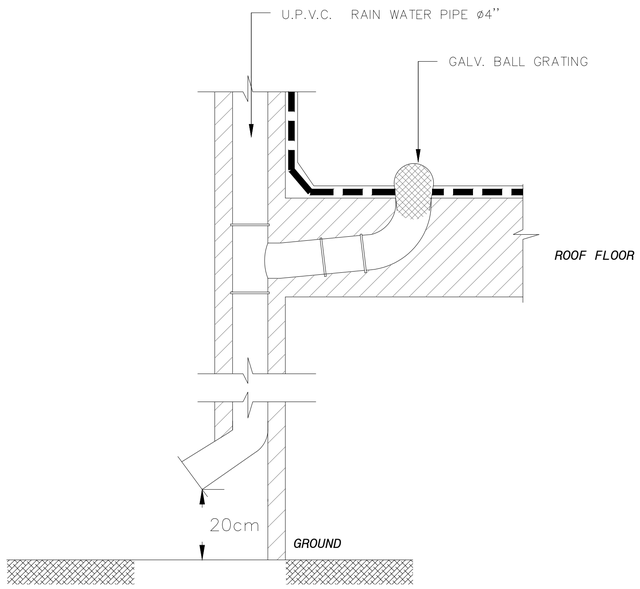

RAIN WATER TRAP DETAIL

NOT TO SCALE

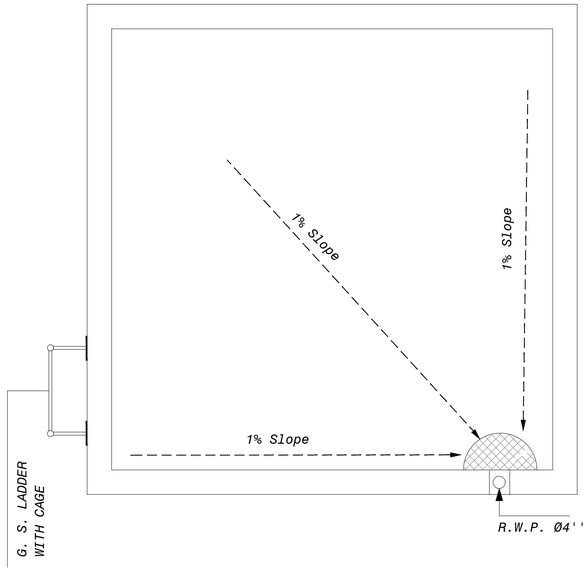

RAIN WATER FOR ROOF PLAN

SCALE 1:25

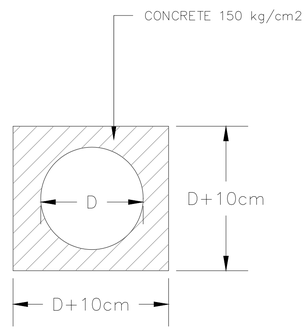

ENCASEMENT FOR PIPE LINES INSIDE WALLS

NOT TO SCALE

NOTES

1. ALL DIMENSIONS ARE IN METERS. EXCEPT WHERE OTHERWISE SHOWN OR NOTED.
2. IT IS THE CONTRACTOR RESPONSIBILITY TO PREPARE AND SUBMIT WORKSHOP DRAWING FOR ENGINEERS BEFORE START WORKS.

Rev.	Date	Description	Drawn	Checked	Approved
2	24.08.2021	Draft Detailed Design	BM	OB	BA
1	01.08.2021	Draft Detailed Design	BM	OB	BA

Project: Support to Infrastructure Works for Phase II: Jericho Agro-Industrial Park and Deep Water Well Drilling

Contract No: .....

Subject: Detail Design

Construction of Deep Well and Transmission Pipeline for JAIP
Well Site- Mechanical
Chlorination Room - Rainwater Drainage Plan

مركز الهندسة والتخطيط
center for engineering and planning

Designed: Samed Burnat
Drawn: Bahaa Al Mur
Checked: Osama Bazzour
Approved: Bassam Abu Zahra
File Name: JAIP-WELL-CR-M.dwg
Date: 24-08-2021
Scale: 1: 25
Size: A1
Drawing No.: JAIP-W-CR-M-01
Sheet: 048/105
Rev.: 01

FINAL
2021-09-19

Center for Engineering and Planning
Ramallah, Palestine
Al Bireh - Al Medan St. Against Al Waterwys Towers
P.O.Box 301

Donor: From the People of Japan — من الشعب الياباني

Owner: سلطة المياه الفلسطينية — PALESTINIAN WATER AUTHORITY

Operator: Jericho Municipality — بلدية أريحا

Implementing Agency: United Nations Development Programme — Programme of Assistance to the Palestinian People — برنامج الأمم المتحدة الإنمائي - برنامج مساعدة الشعب الفلسطيني

This document is the property of Center for Engineering and Planning (CEP) , any duplication or transmition to third parties is forbidden without its prior approval.

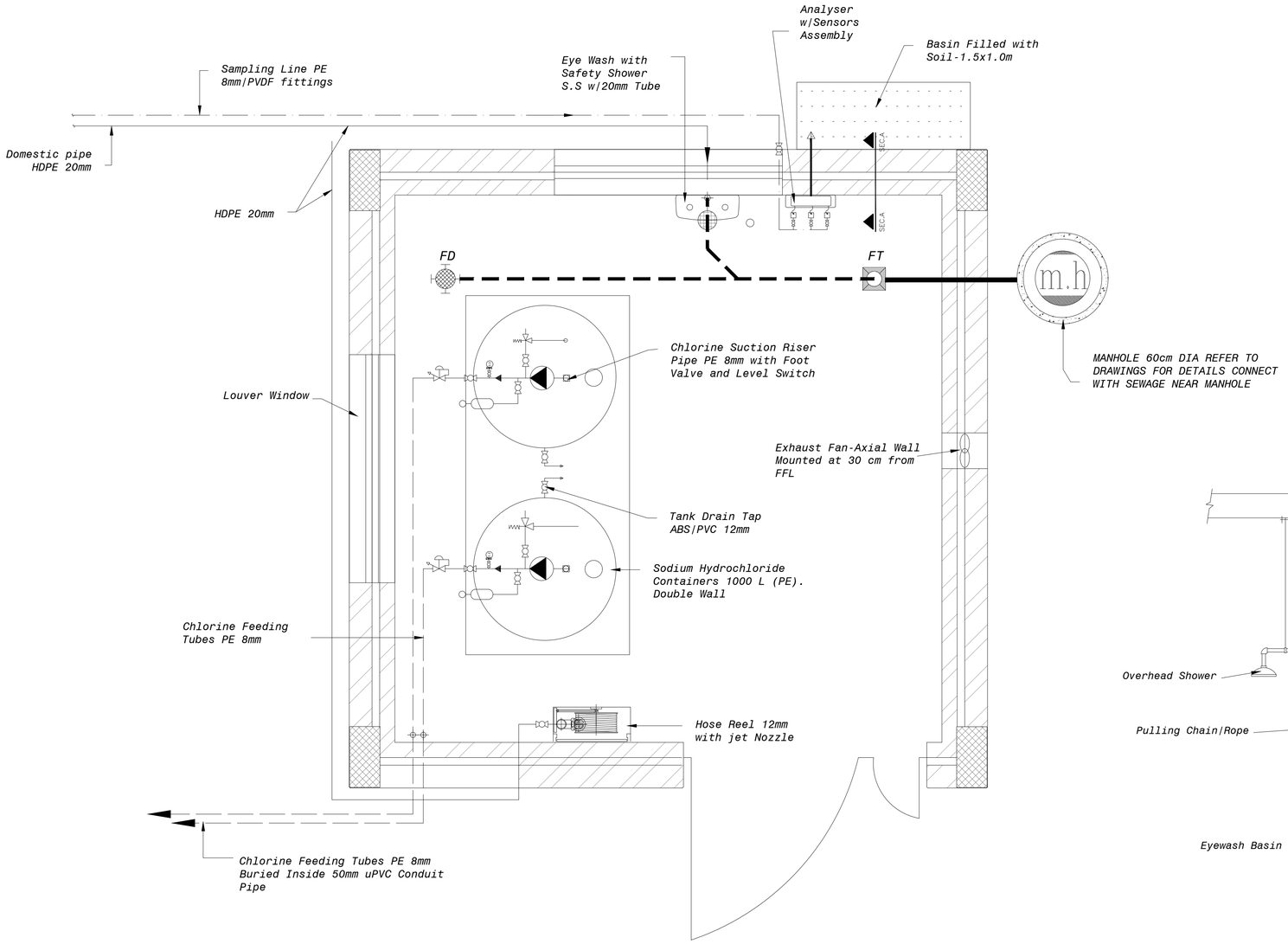

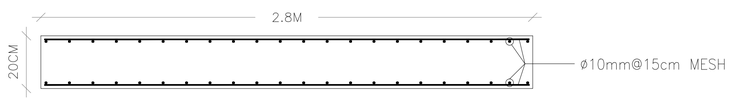

CONCRETE BASE 2.8MX1.7MX0.2M

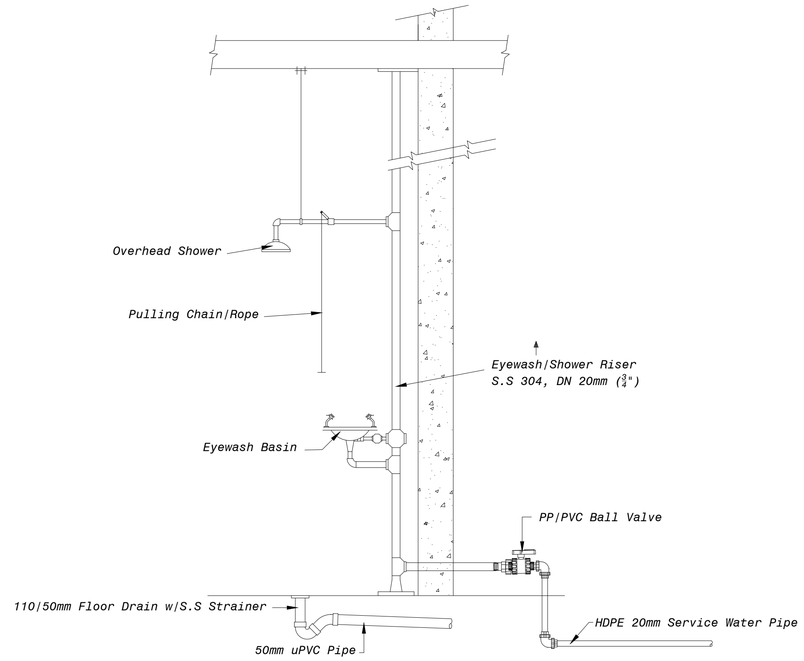

SEC.A - EYE WASH SAFETY SHOWER - ELEVATION

LEGEND

- FD — 100/50MM UPVC FLOOR DRAIN WITH S.S 15X15 CM FRAME /STRAINER
- FT — 110/110MM UPVC FLOOR TRAP WITH S.S 15X15 CM FRAME /STRAINER
- 2" UPVC PIPE
- 4" UPVC PIPE
- ANALYSER SAMPLING TUBE HDPE 8MM
- CHLORINE FEEDING TUBES PE 8MM
- PVDF/PTFE/PVC BALL VALVE
- METERING DIAPHRAM DOSING PUMP PVDF/PTFE HEAD
- PRESSURE RELIEF VALVE-PVDF
- BACK PRESSURE VALVE-PVDF
- PULSATION DAMPENER-PVDF/PVC
- PRESSURE GUAGE

NOTES

8. ALL VALVES / ACCESSORIES TO BE WALL MOUNTED ON APPROPRIATE BRACKET / STAND

NOTES

1. ALL DIMENSIONS ARE IN MILLIMETERS. EXCEPT WHERE OTHERWISE SHOWN OR NOTED.
2. CONTRACTOR SHALL SUBMIT THE MANUFACTURERS CATALOGUES, DIMENSIONS, DETAILS AND CONNECTIONS FOR ALL EQUIPMENT AND CONNECTIONS.
3. DOSING PUMP SHALL BE INSTALLED AS ABOVE THE CONTAINER.
4. STANDBY CONTAINERS SHALL BE COMPLETE WITH ALL AUTOMATIC CHANGEOVER EQUIPMENT.
5. DOSING PUMP OF METERING DIAPHRAGM TYPE SIMILAR TO PROMINENT OR EQUAL (7 L/HR & 6 BAR) WITH PVDF HEAD.
6. PROCESS ANALYZER SIMILAR TO ENDRESS HAUSER OR EQUAL & SHALL BE OF MULTI-PARAMETER TYPE.
7. ALL ACCESSORIES SHALL BE OF PVDF OR SIMILAR MATERIAL.

Rev.	Date	Description	Drawn	Checked	Approved
2	24.08.2021	Draft Detailed Design	BM	OB	BA
1	01.08.2021	Draft Detailed Design	BM	OB	BA

Project: Support to Infrastructure Works for Phase II: Jericho Agro-Industrial Park and Deep Water Well Drilling

Contract No.: .....

Subject: Detail Design

Construction of Deep Well and Transmission Pipeline for JAIP
Well Site- Mechanical
Chlorination Room - Hypo-Chlorination System

Designed: Samed Burnat
Drawn: Bahaa Al Mur
Checked: Osama Bazzour
Approved: Bassam Abu Zahra
File Name: JAIP-WELL-CR-M.dwg
Date: 24-08-2021
Scale: N.T.S
Size: A1
Drawing No.: JAIP-W-CR-M-02
Sheet: 049/105
Rev.: 01

مركز الهندسة والتخطيط
center for engineering and planning

Center for Engineering and Planning
Ramallah - Palestine
Al Birah - Al Medan St. Against Al Watanya Towers
P.O.Box 301

FINAL
2021-09-19

Implementing Agency: United Nations Development Programme
Programme of Assistance to the Palestinian People
برنامج الأمم المتحدة الإنمائي برنامج مساعدة الشعب الفلسطيني

Operator: Jericho Municipality
بلدية أريحا

Owner: سلطة طبيعة فلسطين
PALESTINIAN NATURE AUTHORITY

Donor: من الشعب الياباني
From the People of Japan

This document is the property of Center for Engineering and Planning (CEP), any duplication or transmition to third parties is forbidden without its prior approval.

0 GRAPHIC SCALE 5m
* IF PRINTING ON A1- 1:100
* IF PRINTING ON A3- 1:200